VAL-SEC-T2-2+0-220DC-FM - Type 2 surge arrester

2907875

https://www.phoenixcontact.com/us/products/2907875

Please be informed that the data shown in this PDF document is generated from our online catalog. Please find the complete data in the user documentation. Our general terms of use for downloads are valid.



Pluggable surge protective device, in accordance with Type 2/Class II, for DC power sources with linear operating characteristics, with remote indication contact.

Your advantages

- Surge protection family for universal use with optimum energy coordination from the lightning current arrester to the device protection
- Easy to maintain due to consistently pluggable protection modules
- Excellent level of information provided by mechanical/visual status indicator and remote indication contact
- More space in the control cabinet due to the narrow overall width of just 12 mm per position
- Extremely narrow design, just 12 mm per position
- Varistor arrester with a low leakage current

Commercial data

Item number	2907875
Packing unit	1 pc
Minimum order quantity	1 pc
Sales key	CL01
Product key	CL1353
Catalog page	Page 58 (C-4-2019)
GTIN	4055626245003
Weight per piece (including packing)	231.2 g
Weight per piece (excluding packing)	226.6 g
Customs tariff number	85363090
Country of origin	DE

Technical data

Product properties

Product type	Surge arrester
Product family	SEC Family
IEC test classification	II
	T2
EN type	T2
IEC power supply system	DC
Type	DIN rail module, two-section, divisible
Number of positions	2
Surge protection fault message	Optical, remote indicator contact

Insulation characteristics

Overvoltage category	III
Pollution degree	2

Electrical properties

Nominal voltage U_N	200 V DC ... 220 V DC

Indicator/remote signaling

Connection name	Remote fault indicator contact
Switching function	Changeover contact
Operating voltage	5 V AC ... 250 V AC (Altitude ≤ 2000 m (amsl))
	5 V AC ... 150 V AC (Altitude > 2000 m (amsl))
	125 V DC (200 mA DC)
Operating current	5 mA AC ... 1 A AC
	1 A DC (30 V DC)

Connection data

Connection method	Screw connection
Screw thread	M5
Tightening torque	4.5 Nm
Stripping length	16 mm
Conductor cross section flexible	2.5 mm² ... 16 mm²
Conductor cross section rigid	2.5 mm² ... 25 mm²
Conductor cross section AWG	12 ... 4
Connection method	Fork-type cable lug
Conductor cross section flexible	1.5 mm² ... 6 mm²

Remote fault indicator contact

Connection method	Plug-in/screw connection via COMBICON
Screw thread	M2
Tightening torque	0.25 Nm
Stripping length	7 mm

Conductor cross section flexible	0.14 mm² ... 1.5 mm²
Conductor cross section rigid	0.14 mm² ... 1.5 mm²
Conductor cross section AWG	28 ... 16

Dimensions

Dimensional drawing	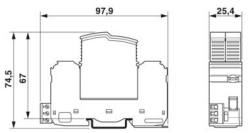
Width	25.4 mm
Height	97.9 mm
Depth	74.5 mm (incl. DIN rail 7.5 mm)
Horizontal pitch	1.4 Div.

Material specifications

Color (Male connector)	light grey (RAL 7035)
Color (Base element)	gray (RAL 7042)
Flammability rating according to UL 94	V-0
CTI value of material	600
Insulating material	PA6.6-FR 20% GF
	PBT-FR
Material group	I
Housing material	PA 6.6-FR 20 % GF
	PBT-FR

Protective circuit

Mode of protection	(DC+) - (DC-)
	(DC+/DC-) - PE
Direction of action	(DC+/DC-) - PE
Nominal voltage U_N	200 V DC ... 220 V DC
Maximum continuous voltage U_C	250 V DC
Rated load current I_L	40 A (Biconnect M4 fork-type cable lug 6 mm²)
	63 A (TWIN ferrule 2 x 10 mm²)
Residual current I_{PE}	≤ 10 µA DC
Nominal discharge current I_n (8/20) µs	20 kA
Maximum discharge current I_{max} (8/20) µs	40 kA
Impulse discharge current (10/350) µs, charge	0.5 As
Impulse discharge current (10/350) µs, specific energy	0.25 kJ/Ω
Impulse discharge current (10/350) µs, peak value I_{imp}	1 kA
Total discharge current I_{total} (8/20) µs	40 kA
Short-circuit current rating I_{SCCR}	0.2 kA (without backup fuse)
	6 kA (for 20 A gG/B backup fuse)
Voltage protection level U_p (DC+) - (DC-)	≤ 3 kV

Voltage protection level U_p (DC+/DC-) - PE	≤ 1.5 kV
TOV behavior at U_T	320 V DC (5 s / withstand mode)
Response time t_A	≤ 25 ns
Max. backup fuse with V-type through wiring	20 A (gG / B at I_{SCCR} > 200 A)
Max. backup fuse with branch wiring	20 A (gG / B at I_{SCCR} > 200 A)

Additional technical data

Maximum continuous voltage U_C	264 V AC (for operation in safety lighting systems)

Environmental and real-life conditions

Ambient conditions

Degree of protection	IP20
Ambient temperature (operation)	-40 °C ... 80 °C
Ambient temperature (storage/transport)	-40 °C ... 80 °C
Altitude	≤ 6000 m (amsl)
Permissible humidity (operation)	5 % ... 95 %
Shock (operation)	30g (Half-sine / 11 ms / 3x ±X, ±Y, ±Z)
Vibration (operation)	5g (10 ... 500 Hz / 2.5 h / X, Y, Z)

Approvals

UL specifications

Nominal discharge current I_n	20 kA
Mode of protection	(DC+) - (DC-)
	(DC+) - G
	(DC-) - G
Nominal voltage	220 V DC
Power distribution system	DC
SPD Type	4CA

UL indicator/remote signaling

Operating voltage	125 V AC
AC operating current	1 A AC

UL connection data

Tightening torque	30 lb_f-in.
Conductor cross section AWG	10 ... 2

Standards and regulations

Standards/specifications	IEC 61643-11
Note	2011

EN 61643-11

Standards/specifications	EN 61643-11
Note	2012

Mounting

Mounting type	DIN rail: 35 mm

Drawings

Dimensional drawing

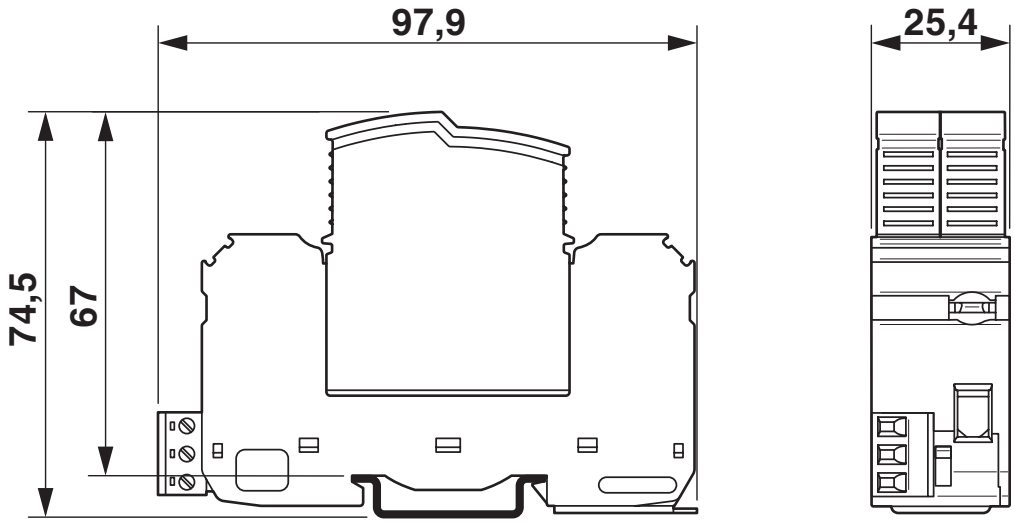

Application drawing

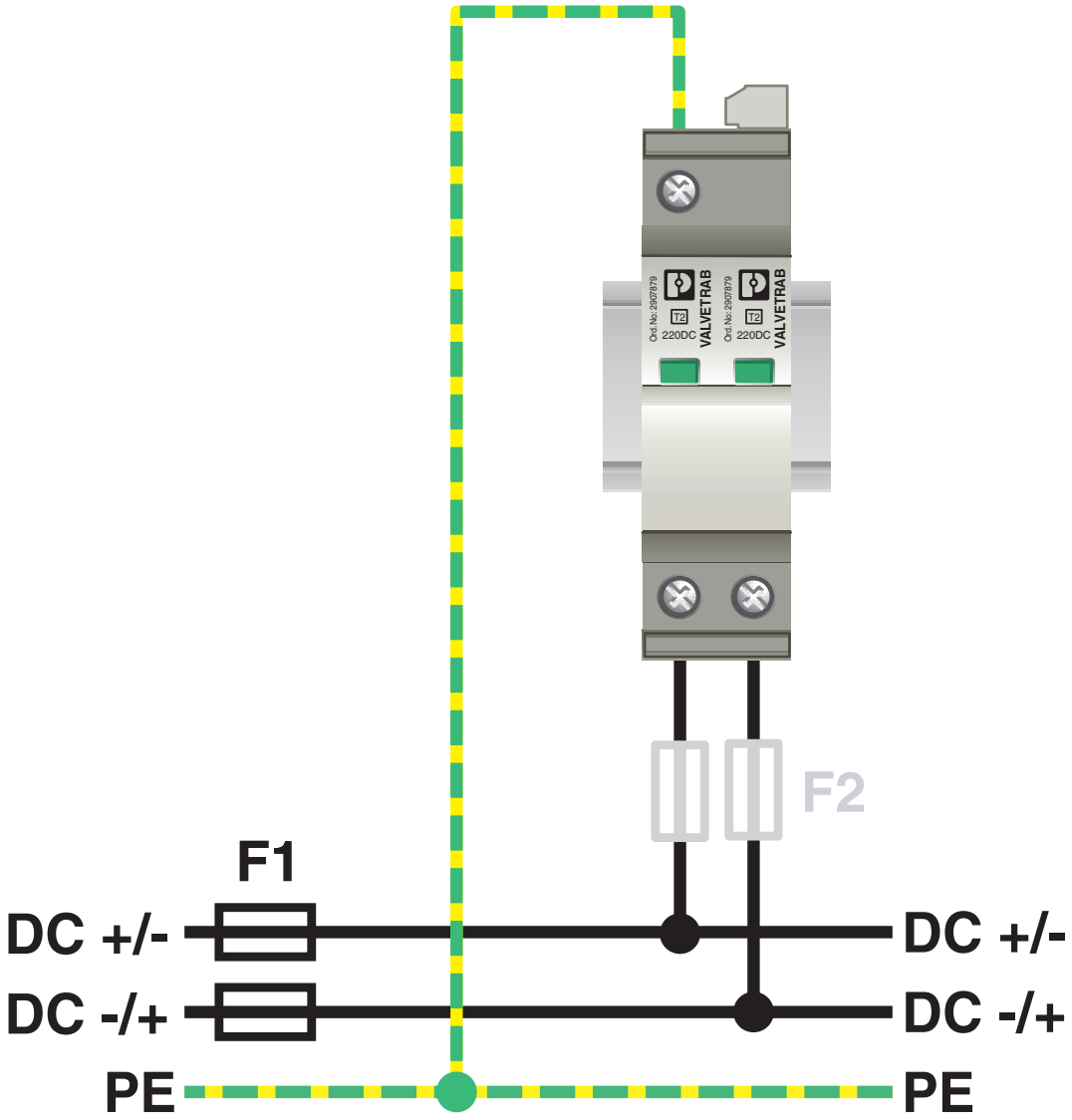

Circuit diagram

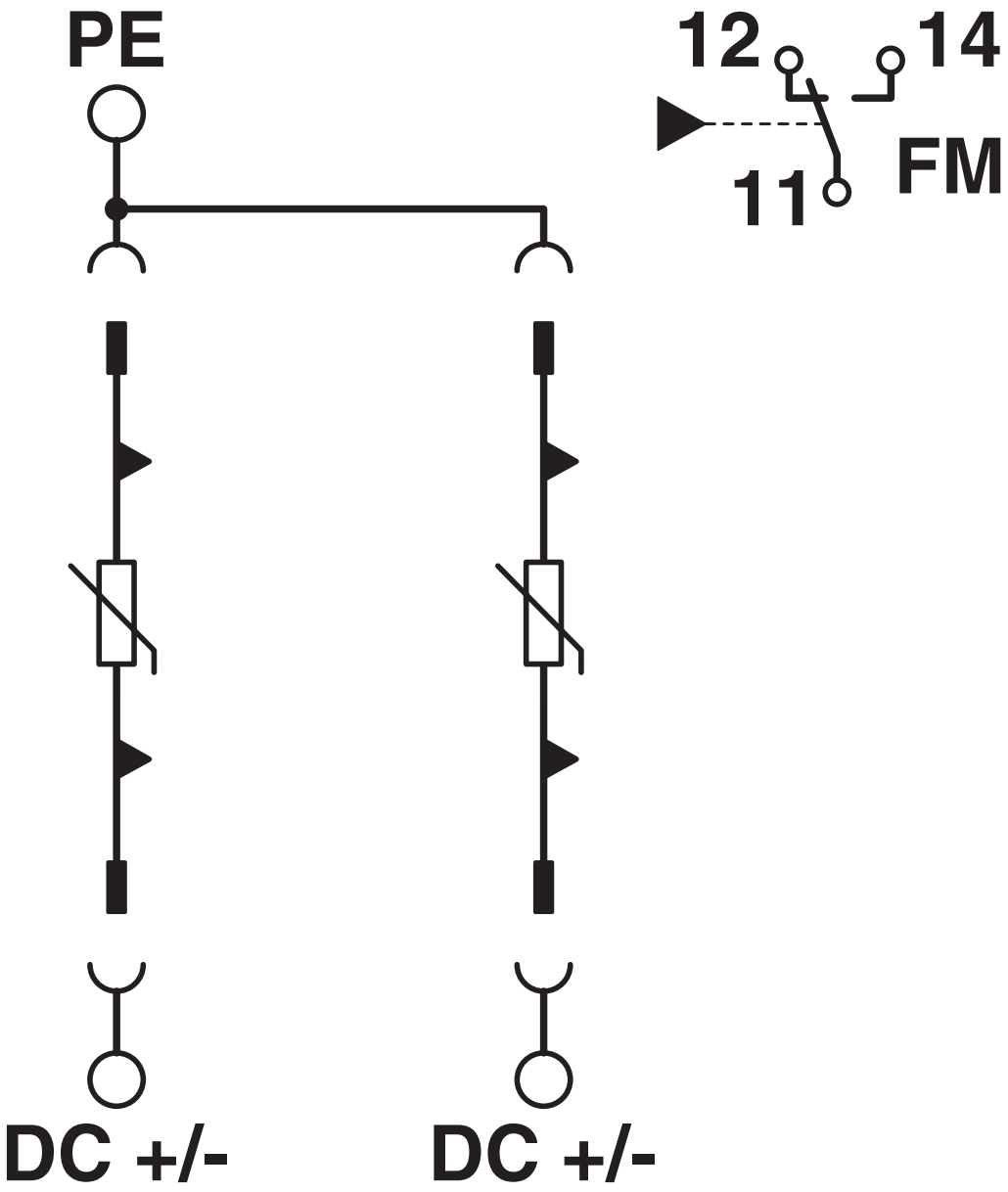

Product drawing

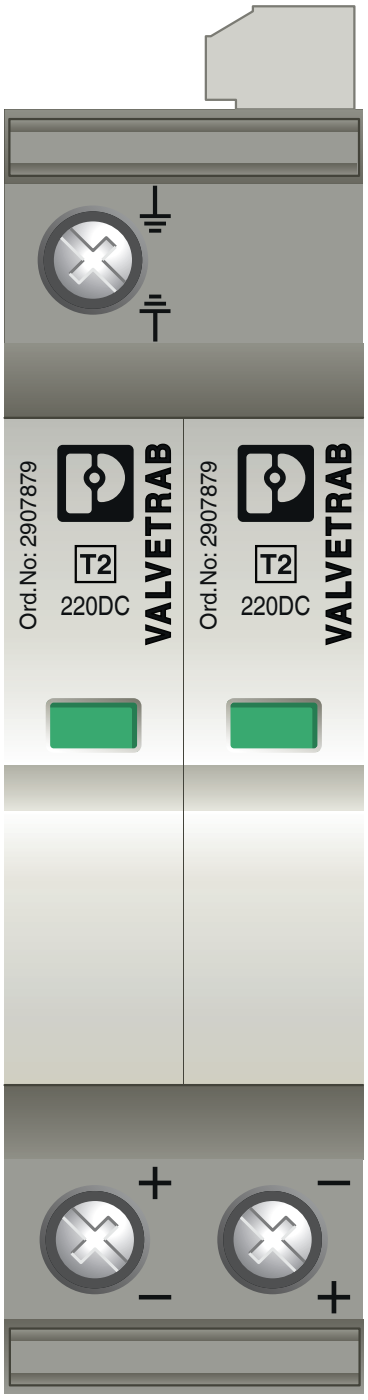

Approvals

To download certificates, visit the product detail page: https://www.phoenixcontact.com/us/products/2907875

cUL Recognized
Approval ID: FILE E 330181

UL Recognized
Approval ID: FILE E 330181

EAC
Approval ID: RU C-DE.*09.B.00169

DNV GL
Approval ID: TAE000023D

UAE-RoHS
Approval ID: 23-10-88707

cULus Recognized

Classifications

ECLASS

ECLASS-11.0	27130805
ECLASS-13.0	27171302

ETIM

ETIM 9.0	EC000941

UNSPSC

UNSPSC 21.0	39121600

Environmental product compliance

EU RoHS

Fulfills EU RoHS substance requirements	Yes, No exemptions

China RoHS

Environment friendly use period (EFUP)	EFUP-E
	No hazardous substances above the limits

EU REACH SVHC

REACH candidate substance (CAS No.)	No substance above 0.1 wt%

Accessories

CLIPFIX 35 - End bracket

3022218

https://www.phoenixcontact.com/us/products/3022218



Quick mounting end clamp for NS 35/7,5 DIN rail or NS 35/15 DIN rail, with marking option, width: 9.5 mm, color: gray

EML (20XE)R - Label

0803452

https://www.phoenixcontact.com/us/products/0803452



Label, Roll, white, unlabeled, can be labeled with: THERMOMARK E.300 (D)/600 (D), THERMOMARK ROLL 2.0, THERMOMARK ROLL, THERMOMARK ROLL X1, THERMOMARK ROLLMASTER 300/600, THERMOMARK X1.2, mounting type: adhesive, lettering field size: continuous x 20 mm, Number of individual labels: 1

EML (20XE)R YE - Label

0803453

https://www.phoenixcontact.com/us/products/0803453



Label, Roll, yellow, unlabeled, can be labeled with: THERMOMARK E.300 (D)/600 (D), THERMOMARK ROLL 2.0, THERMOMARK ROLL, THERMOMARK ROLL X1, THERMOMARK ROLLMASTER 300/600, THERMOMARK X1.2, mounting type: adhesive, lettering field size: continuous x 20 mm, Number of individual labels: 1

ZBN 18:UNBEDRUCKT - Zack marker strip

2809128

https://www.phoenixcontact.com/us/products/2809128



Zack marker strip, Strip, white, unlabeled, can be labeled with: CMS-P1-PLOTTER, PLOTMARK, mounting type: snapped, for terminal block width: 18 mm, lettering field size: 18 x 5 mm, Number of individual labels: 5

ZBN 18,LGS:L1-N,ERDE - Marker for terminal blocks

2749576

https://www.phoenixcontact.com/us/products/2749576



Marker for terminal blocks, Strip, white, labeled, horizontal: L1, L2, L3, N, GND, mounting type: snapped, for terminal block width: 18 mm, lettering field size: 18 x 5 mm, Number of individual labels: 5

ZBN 18,LGS:ERDE - Marker for terminal blocks

2749589

https://www.phoenixcontact.com/us/products/2749589



Marker for terminal blocks, Strip, white, labeled, horizontal: Grounding symbol, mounting type: snapped, for terminal block width: 18 mm, lettering field size: 18 x 5 mm, Number of individual labels: 5

ZBFM 5/WH:UNBEDRUCKT - Flat zack marker sheet

0803595

https://www.phoenixcontact.com/us/products/0803595



Flat zack marker sheet, Sheet, white, unlabeled, can be labeled with: CMS-P1-PLOTTER, PLOTMARK, mounting type: snapped, for terminal block width: 5.2 mm, lettering field size: 5 x 4.5 mm, Number of individual labels: 120

VAL-SEC-AGK-25 - Pick-off terminal block

1452282

https://www.phoenixcontact.com/us/products/1452282



Pick-off terminal block, can only be used in combination with VAL-SEC-T2 series, nominal voltage: 400 V, nominal current: 63 A, connection method: screw connection, rated cross-section: 25 mm^2, cross-section: 1.5 mm^2 ... 25 mm^2, color: gray

ZBN 18 CUS - Zack marker strip

0825059

https://www.phoenixcontact.com/us/products/0825059



Zack marker strip, can be ordered: Strip, white, labeled according to customer specifications, mounting type: snap into tall marker groove, for terminal block width: 18 mm, lettering field size: 18 x 5 mm, Number of individual labels: 5

X-PEN 0,35 - Marker pen

0811228

https://www.phoenixcontact.com/us/products/0811228



Marker pen without ink cartridge, for manual labeling of markers, labeling extremely wipe-proof, line thickness 0.35 mm

SZK PZ2 VDE - Screwdriver

1206463

https://www.phoenixcontact.com/us/products/1206463



Screwdriver, PZ crosshead, VDE insulated, size: PZ 2 x 100 mm, 2-component grip, with non-slip grip

VAL-SEC-T2-220DC-P - Type 2 surge protection plug

2907879

https://www.phoenixcontact.com/us/products/2907879



Replacement plug for surge protective devices from the VALVETRAB SEC product range for DC power sources.

Phoenix Contact 2024 © - all rights reserved
https://www.phoenixcontact.com

Phoenix Contact USA
586 Fulling Mill Road
Middletown, PA 17057, United States
(+717) 944-1300
info@phoenixcon.com