VIP-2/SC/D 9SUB/F/LED - Interface module

2322197

https://www.phoenixcontact.com/us/products/2322197

Please be informed that the data shown in this PDF document is generated from our online catalog. Please find the complete data in the user documentation. Our general terms of use for downloads are valid.



VARIOFACE module, with screw connection and D-Subminiature socket strip, for mounting on NS 35 rails, with LED, 9-pos.

Your advantages

- 9-pos. ... 50-pos.
- Metal foot
- In accordance with IEC 60603-13
- Screw connection
- 1:1 connection
- In accordance with IEC 60603-13

Commercial data

Item number	2322197
Packing unit	1 pc
Minimum order quantity	1 pc
Sales key	C423
Product key	CK2112
Catalog page	Page 571 (C-5-2017)
GTIN	4046356451819
Weight per piece (including packing)	90.2 g
Weight per piece (excluding packing)	90.2 g
Customs tariff number	85366990
Country of origin	US

Technical data

Product properties

Product type	Interface module
Product family	VARIOFACE Professional
Number of positions	9

Insulation characteristics

Overvoltage category	II
Pollution degree	2

Electrical properties

Nominal voltage U_N	24 V DC
Max. current carrying capacity per branch	2.5 A

Connection data

Field level

Connection in acc. with standard	IEC / EN
Connection method	Screw connection
Stripping length	8 mm
Screw thread	M3
Conductor cross section rigid	0.2 mm² ... 4 mm²
Conductor cross section flexible	0.2 mm² ... 2.5 mm²
Conductor cross section AWG	24 ... 12
Tightening torque	0.5 Nm ... 0.6 Nm

Controller level

Connection method	D-SUB socket strip
Number of connections	1
Number of positions	9

Signaling

Status display	LED
Status display present	Yes

Dimensions

Item dimensions

Width	34.5 mm
Height	65.8 mm
Depth	44.2 mm

Material specifications

Color	gray (RAL 7042)
Flammability rating according to UL 94	V0

Housing insulation material	Polyamide 6 green

Environmental and real-life conditions

Ambient conditions

Ambient temperature (operation)	-20 °C ... 50 °C
Ambient temperature (storage/transport)	-20 °C ... 70 °C

Standards and regulations

Standards/regulations	IEC 60664
	DIN EN 50178

Mounting

Mounting type	DIN rail mounting
Mounting position	any

Notes

Notes on operation	For proper use, the specifications of the installation directive (see Downloads) must be observed. For applications or use with third-party products, the specifications, and the safety and warning instructions of the respective third-party manufacturer must also be met.

Drawings

Circuit diagram

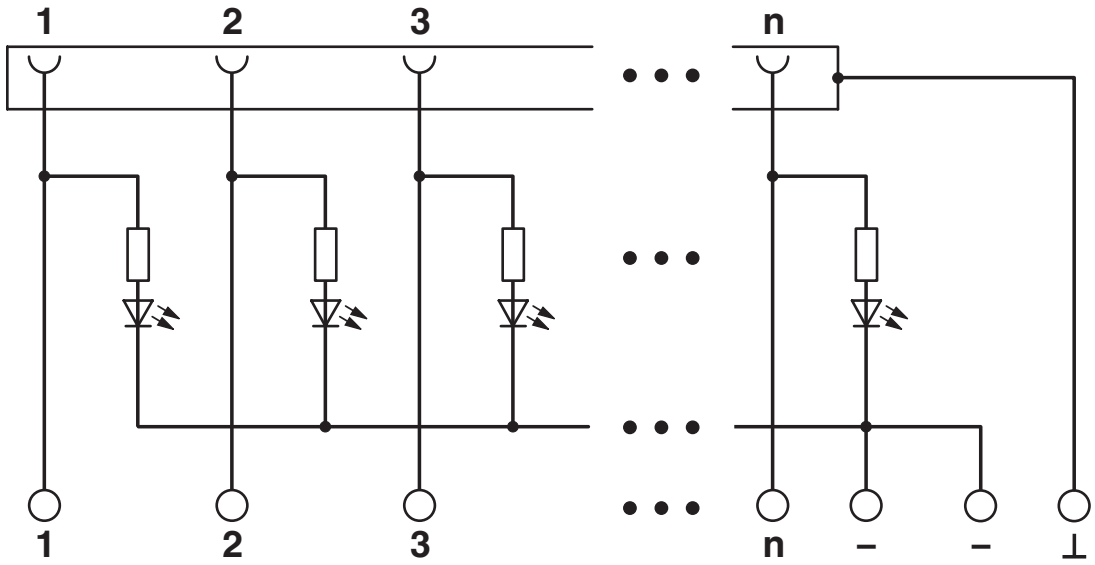

Approvals

To download certificates, visit the product detail page: https://www.phoenixcontact.com/us/products/2322197

CSA
Approval ID: 2122203

	Nominal voltage U_N	Nominal current I_N	Cross section AWG	Cross section mm^2
	24 V	2 A	28 - 12	-

cUL Recognized
Approval ID: FILE E 238705

	Nominal voltage U_N	Nominal current I_N	Cross section AWG	Cross section mm^2
	24 V	2 A	30 - 12	-

UL Recognized
Approval ID: FILE E 238705

	Nominal voltage U_N	Nominal current I_N	Cross section AWG	Cross section mm^2
	24 V	2 A	30 - 12	-

CSAus
Approval ID: 2122203

	Nominal voltage U_N	Nominal current I_N	Cross section AWG	Cross section mm^2
	24 V	2 A	28 - 12	-

cULus Recognized

cCSAus

Classifications

ECLASS

ECLASS-11.0	27141152
ECLASS-13.0	27141152
ECLASS-12.0	27141152

ETIM

ETIM 9.0	EC002780

UNSPSC

UNSPSC 21.0	39121400

Environmental product compliance

EU RoHS

Fulfills EU RoHS substance requirements	Yes
Exemption	6(c), 7(c)-I

China RoHS

Environment friendly use period (EFUP)	EFUP-50
	An article-related China RoHS declaration table can be found in the download area for the respective article under "Manufacturer declaration". For all articles with EFUP-E, no China RoHS declaration table issued and required.

EU REACH SVHC

REACH candidate substance (CAS No.)	Lead(CAS: 7439-92-1)
SCIP	e9265ca0-4bc7-40cc-bf46-aa1426a13c35

Accessories

CABLE D-SUB-S/.../.../... - Cable

2302340

https://www.phoenixcontact.com/us/products/2302340



Shielded round cable, assembled with one D-SUB female and pin strip (9-, 15-, 25-, 37-, or 50-pos.), variable cable length

CABLE D-SUB-S-S-S/.../.../... - Cable

2302434

https://www.phoenixcontact.com/us/products/2302434



Shielded round cable, assembled with two D-SUB pin strips (9-, 15-, 25-, 37-, or 50-pos.), variable cable length

CABLE-D 9SUB/B/S/ 50/KONFEK/S - Cable

2299987

https://www.phoenixcontact.com/us/products/2299987



Assembled shielded round cable; connection 1: D-SUB socket strip (1x 9-position); connection 2: D-SUB pin strip (1x 9-position); cable length: 0.5 m

CABLE-D 9SUB/B/S/100/KONFEK/S - Cable

2299990

https://www.phoenixcontact.com/us/products/2299990



Assembled shielded round cable; connection 1: D-SUB socket strip (1x 9-position); connection 2: D-SUB pin strip (1x 9-position); cable length: 1 m

CABLE-D 9SUB/B/S/150/KONFEK/S - Cable

2300009

https://www.phoenixcontact.com/us/products/2300009



Assembled shielded round cable; connection 1: D-SUB socket strip (1x 9-position); connection 2: D-SUB pin strip (1x 9-position); cable length: 1.5 m

CABLE-D 9SUB/B/S/200/KONFEK/S - Cable

2302010

https://www.phoenixcontact.com/us/products/2302010



Assembled shielded round cable; connection 1: D-SUB socket strip (1x 9-position); connection 2: D-SUB pin strip (1x 9-position); cable length: 2 m

CABLE-D 9SUB/B/S/300/KONFEK/S - Cable

2302023

https://www.phoenixcontact.com/us/products/2302023



Assembled shielded round cable; connection 1: D-SUB socket strip (1x 9-position); connection 2: D-SUB pin strip (1x 9-position); cable length: 3 m

CABLE-D 9SUB/B/S/400/KONFEK/S - Cable

2302036

https://www.phoenixcontact.com/us/products/2302036



Assembled shielded round cable; connection 1: D-SUB socket strip (1x 9-position); connection 2: D-SUB pin strip (1x 9-position); cable length: 4 m

CABLE-D 9SUB/B/S/600/KONFEK/S - Cable

2302049

https://www.phoenixcontact.com/us/products/2302049



Assembled shielded round cable; connection 1: D-SUB socket strip (1x 9-position); connection 2: D-SUB pin strip (1x 9-position); cable length: 6 m

CABLE-D 9SUB/B/S/HF/S/ 1,0M - Cable

1066591

https://www.phoenixcontact.com/us/products/1066591



Assembled, shielded, halogen-free round cable; connection 1: D-SUB socket strip (1x 9-position); connection 2: D-SUB pin strip (1x 9-position); cable length: 1 m

CABLE-D 9SUB/B/S/HF/S/ 2,0M - Cable

1066592

https://www.phoenixcontact.com/us/products/1066592



Assembled, shielded, halogen-free round cable; connection 1: D-SUB socket strip (1x 9-position); connection 2: D-SUB pin strip (1x 9-position); cable length: 2 m

CABLE-D 9SUB/B/S/HF/S/ 3,0M - Cable

1066593

https://www.phoenixcontact.com/us/products/1066593



Assembled, shielded, halogen-free round cable; connection 1: D-SUB socket strip (1x 9-position); connection 2: D-SUB pin strip (1x 9-position); cable length: 3 m

CABLE-D 9SUB-B-S-HF-S/... - Cable

1075568

https://www.phoenixcontact.com/us/products/1075568



Assembled, shielded, halogen-free round cable; connection 1: D-SUB socket strip (1x 9-position); connection 2: D-SUB pin strip (1x 9-position); cable length: variable

CABLE-D- 9SUB/M/OE/0,25/S/0,5M - Cable

2926360

https://www.phoenixcontact.com/us/products/2926360



Assembled shielded round cable; connection 1: Single wires (9-position) (The wires are marked and fitted with ferrules. The braided shield is routed to a separate cable end.); connection 2: D-SUB pin strip (1x 9-position); cable length: 0.5 m

CABLE-D- 9SUB/M/OE/0,25/S/1,0M - Cable

2926373

https://www.phoenixcontact.com/us/products/2926373



Assembled shielded round cable; connection 1: Single wires (9-position) (The wires are marked and fitted with ferrules. The braided shield is routed to a separate cable end.); connection 2: D-SUB pin strip (1x 9-position); cable length: 1 m

CABLE-D- 9SUB/M/OE/0,25/S/1,5M - Cable

2926386

https://www.phoenixcontact.com/us/products/2926386



Assembled shielded round cable; connection 1: Single wires (9-position) (The wires are marked and fitted with ferrules. The braided shield is routed to a separate cable end.); connection 2: D-SUB pin strip (1x 9-position); cable length: 1.5 m

CABLE-D- 9SUB/M/OE/0,25/S/2,0M - Cable

2926399

https://www.phoenixcontact.com/us/products/2926399



Assembled shielded round cable; connection 1: Single wires (9-position) (The wires are marked and fitted with ferrules. The braided shield is routed to a separate cable end.); connection 2: D-SUB pin strip (1x 9-position); cable length: 2 m

CABLE-D- 9SUB/M/OE/0,25/S/3,0M - Cable

2926409

https://www.phoenixcontact.com/us/products/2926409



Assembled shielded round cable; connection 1: Single wires (9-position) (The wires are marked and fitted with ferrules. The braided shield is routed to a separate cable end.); connection 2: D-SUB pin strip (1x 9-position); cable length: 3 m

CABLE-D- 9SUB/M/OE/0,25/S/4,0M - Cable

2926412

https://www.phoenixcontact.com/us/products/2926412



Assembled shielded round cable; connection 1: Single wires (9-position) (The wires are marked and fitted with ferrules. The braided shield is routed to a separate cable end.); connection 2: D-SUB pin strip (1x 9-position); cable length: 4 m

CABLE-D- 9SUB/M/OE/0,25/S/6,0M - Cable

2926425

https://www.phoenixcontact.com/us/products/2926425



Assembled shielded round cable; connection 1: Single wires (9-position) (The wires are marked and fitted with ferrules. The braided shield is routed to a separate cable end.); connection 2: D-SUB pin strip (1x 9-position); cable length: 6 m

CABLE-D- 9SUB-M-OE-0,25-S/... - Cable

2900909

https://www.phoenixcontact.com/us/products/2900909



Assembled shielded round cable; connection 1: Single wires (9-position) (The wires are marked and fitted with ferrules. The braided shield is routed to a separate cable end.); connection 2: D-SUB pin strip (1x 9-position); cable length: variable

CABLE-D 9SUB/S/S/100/KONFEK/S - Cable

2305570

https://www.phoenixcontact.com/us/products/2305570



Assembled shielded round cable; connection 1: D-SUB pin strip (1x 9-position); connection 2: D-SUB pin strip (1x 9-position); cable length: 1 m

CABLE-D 9SUB/S/S/200/KONFEK/S - Cable

2305583

https://www.phoenixcontact.com/us/products/2305583



Assembled shielded round cable; connection 1: D-SUB pin strip (1x 9-position); connection 2: D-SUB pin strip (1x 9-position); cable length: 2 m

CABLE-D 9SUB/S/S/300/KONFEK/S - Cable

2305596

https://www.phoenixcontact.com/us/products/2305596



Assembled shielded round cable; connection 1: D-SUB pin strip (1x 9-position); connection 2: D-SUB pin strip (1x 9-position); cable length: 3 m

CABLE-D 9SUB/S/S/HF/S/ 1,0M - Cable

1066594

https://www.phoenixcontact.com/us/products/1066594



Assembled, shielded, halogen-free round cable; connection 1: D-SUB pin strip (1x 9-position); connection 2: D-SUB pin strip (1x 9-position); cable length: 1 m

CABLE-D 9SUB/S/S/HF/S/ 2,0M - Cable

1066595

https://www.phoenixcontact.com/us/products/1066595



Assembled, shielded, halogen-free round cable; connection 1: D-SUB pin strip (1x 9-position); connection 2: D-SUB pin strip (1x 9-position); cable length: 2 m

CABLE-D 9SUB/S/S/HF/S/ 3,0M - Cable

1066596

https://www.phoenixcontact.com/us/products/1066596



Assembled, shielded, halogen-free round cable; connection 1: D-SUB pin strip (1x 9-position); connection 2: D-SUB pin strip (1x 9-position); cable length: 3 m

CABLE-D 9SUB-S-S-HF-S/... - Cable

1075567

https://www.phoenixcontact.com/us/products/1075567



Assembled, shielded, halogen-free round cable; connection 1: D-SUB pin strip (1x 9-position); connection 2: D-SUB pin strip (1x 9-position); cable length: variable

Phoenix Contact 2024 © - all rights reserved
https://www.phoenixcontact.com

Phoenix Contact USA
586 Fulling Mill Road
Middletown, PA 17057, United States
(+717) 944-1300
info@phoenixcon.com