880309-1 ✔ ACTIVE

FASTIN-FASTON | FASTIN-FASTON 250

TE Internal #: 880309-1

Crimp Terminal Housings, Tab, Tab Housing, 1 Position, Straight, Natural, Nylon, Mating Alignment, Cable Mount (Free-Hanging), FASTIN-FASTON 250

View on TE.com >

Terminals & Splices > Terminal Housings, Insulation Sleeves & Blocks > Crimp Terminal Housings

Terminal Type: **Tab**

Connector & Housing Type: **Tab Housing**

Number of Positions: **1**

Terminal Orientation: **Straight**

Primary Product Color: **Natural**

Features

Product Type Features

Sealable	No
Connector & Housing Type	Tab Housing

Configuration Features

Number of Positions	1

Body Features

Primary Product Color	Natural

Contact Features

Terminal Type	Tab
Terminal Orientation	Straight
Contact Mating Retention	Without

Mechanical Attachment

Mating Retention Type	Latch
Mating Alignment	With

Connector Mounting Type	Cable Mount (Free-Hanging)

Housing Features

Housing Material	Nylon

Dimensions

Product Length	32 mm[1.26 in]

Usage Conditions

Operating Temperature Range	-40 - 105 °C[-40 - 221 °F]

Packaging Features

Packaging Quantity	3500
Packaging Method	Carton

Product Compliance

For compliance documentation, visit the product page on TE.com>

EU RoHS Directive 2011/65/EU	Compliant
EU ELV Directive 2000/53/EC	Compliant
China RoHS 2 Directive MIIT Order No 32, 2016	No Restricted Materials Above Threshold
EU REACH Regulation (EC) No. 1907/2006	Current ECHA Candidate List: JAN 2024 (240) Candidate List Declared Against: JAN 2024 (240) Does not contain REACH SVHC
Halogen Content	Low Halogen - Br, Cl, F, I < 900 ppm per homogenous material. Also BFR/CFR/PVC Free
Solder Process Capability	Not applicable for solder process capability

Product Compliance Disclaimer

This information is provided based on reasonable inquiry of our suppliers and represents our current actual knowledge based on the information they provided. This information is subject to change. The part numbers that TE has identified as EU RoHS compliant have a maximum concentration of 0.1% by weight in homogenous materials for lead, hexavalent chromium, mercury, PBB, PBDE, DBP, BBP, DEHP, DIBP, and 0.01% for cadmium, or qualify for an exemption to these limits as defined in the Annexes of Directive 2011/65/EU (RoHS2). Finished electrical and electronic equipment products will be CE marked as required by Directive 2011/65/EU. Components may not be CE marked. Additionally, the part numbers that TE has identified as EU ELV compliant have a maximum concentration of 0.1% by weight in homogenous materials for lead, hexavalent chromium, and mercury, and 0.01% for cadmium, or qualify for an exemption to these limits as defined in the Annexes of Directive 2000/53/EC (ELV). Regarding the REACH Regulation, the information TE provides on SVHC in articles for this part number is based on the latest European Chemicals Agency (ECHA) 'Guidance on requirements for substances in articles' posted at this URL: https://echa.europa.eu/guidance-documents/guidance-on-reach

Compatible Parts

TE Part # 170340-1
FF 250 TAB 20-14AWG BR WITHOUT LATCH

TE Part # 170341-3
FF 250 TAB 14-12AWG PTBR WITHOUT LATCH

TE Part # 170349-2
FF 250 TAB 22-20AWG TPBR WITHOUT LATCH

TE Part # 170340-3
FF 250 TAB 20-14AWG PTBR WITHOUT LATCH

TE Part # 170341-1
FF 250 TAB 14-12AWG BR WITHOUT LATCH

TE Part # 170349-1
FF 250 TAB 22-20AWG BR WITHOUT LATCH

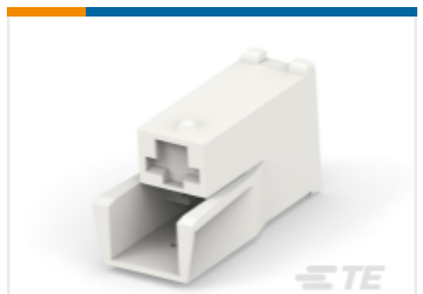

TE Part # 880097-1
2 WAY FASTIN ON HSG

TE Part # 880309-2
1 WAY FF 250 HOUSING TAB NYLON 6.6 BLACK

Also in the Series | FASTIN-FASTON 250

Crimp Terminal Housings(211)

Insertion & Extraction Tools(2)

PCB Terminals(2)

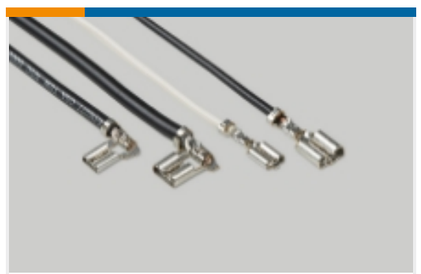

Quick Disconnects(254)

Customers Also Bought

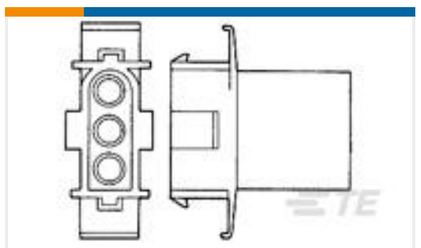

TE Part # 1-350345-0
02P .140 MNL CAP P/M NAT

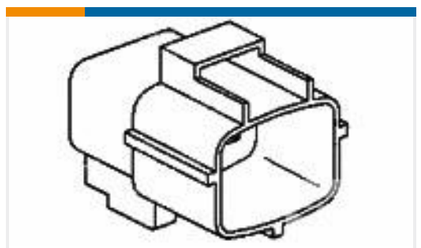

TE Part # 444010-1
KIT ECONOSEAL J 12

TE Part # 880636-2
FF 250 TAB 1.0-2.5 MM2 0.39 X 13.2 TPBR

TE Part # 626029-2
RING TONGUE TERMINAL 0.5 /1.5 MM2 TPBR

TE Part # 880688-1
FF 250 TERMINAL 0.5-1.0MM2 0.39 X13.2 BR

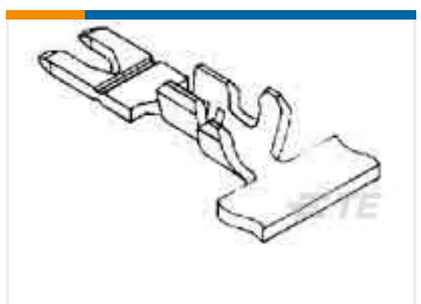

TE Part # 881257-1
MAG-MATE TAB TERMIN

TE Part # 880635-5
FF 110 REC 1.0-1.5 MM2 0.25X12.32 PTPBR

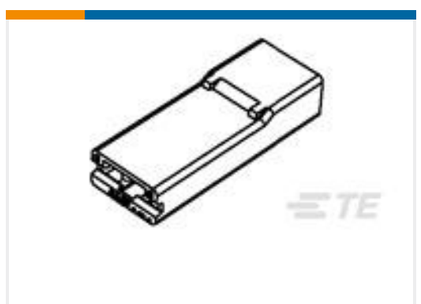

TE Part # 1-735075-5
250 FASTON INS POST.,REC.,1 POS, BLACK

TE Part # 444407-2
FASTIN-ON 110 HSG 4 POS REC

Documents

Product Drawings

1 WAY FF 250 HOUSING TAB NYLON 6.6 NAT

English

CAD Files

3D PDF

3D

Customer View Model

ENG_CVM_CVM_880309-1_P_c-880309-1-p.2d_dxf.zip

English

Customer View Model

ENG_CVM_CVM_880309-1_P_c-880309-1-p.3d_igs.zip

English

Customer View Model

ENG_CVM_CVM_880309-1_P_c-880309-1-p.3d_stp.zip

English

By downloading the CAD file I accept and agree to the Terms and Conditionsof use.

Datasheets & Catalog Pages

White Paper: Nylon Discoloration

English

Product Specifications

Application Specification

English