NEWHAVEN DISPLAY INTERNATIONAL

Product Specification

NHD-5.0-800480FT-CSXP-CTP

5.0" EVE2 TFT Module

NHD-	Newhaven Display
5.0 -	5.0" Diagonal
800480 -	800xRGBx480 Pixels
FT -	Model
C -	On-board Controller
S -	Sunlight Readable
X -	TFT
P -	IPS
CTP -	Capacitive Touch Panel

Newhaven Display International, Inc.
2661 Galvin Court, Elgin, IL 60124 USA

Ph: 847.844.8795 | Fx: 847.844.8796
www.newhavendisplay.com

REACH Compliant

RoHS Compliant

NEWHAVEN DISPLAY INTERNATIONAL

Table of Contents

Document Revision History 2
Mechanical Drawing 3
Schematic 4
Pin Description 5
EVE2 Controller Information 5
Display Information 5
Electrical Characteristics 5
Backlight Driver Configuration 6
Arduino Application 6
FT81x Block Diagram 6
Serial Host Interface 7
TFT Timing Characteristics 7
Graphics Engine 7
Touch-Screen Engine 8
Audio Engine 8
Audio Filter and Amplifier Reference Circuit 10
Additional EVE2 Resources 11
Quality Information 12

Additional Resources

- **Support Forum:** https://support.newhavendisplay.com/hc/en-us/community/topics
- **GitHub:** https://github.com/newhavendisplay
- **Example Code:** https://support.newhavendisplay.com/hc/en-us/categories/4409527834135-Example-Code/
- **Knowledge Center:** https://www.newhavendisplay.com/knowledge_center.html
- **Quality Center:** https://www.newhavendisplay.com/quality_center.html
- **Precautions for using LCDs/LCMs:** https://www.newhavendisplay.com/specs/precautions.pdf
- **Warranty / Terms & Conditions:** https://www.newhavendisplay.com/terms.html

Document Revision History

Revision	Date	Description	Changed By
-	06/20/2022	Initial Release	JT
1	08/31/2022	Updated Backlight PWM Frequency Range, Updated Schematic to show new LED driver IC and auxiliary components.	TM
2	02/28/2023	Document Formatting Updated	KL
3	11/20/2023	REG_CSPREAD in TFT Timing Characteristics Updated from 1 to 0	KL

Mechanical Drawing

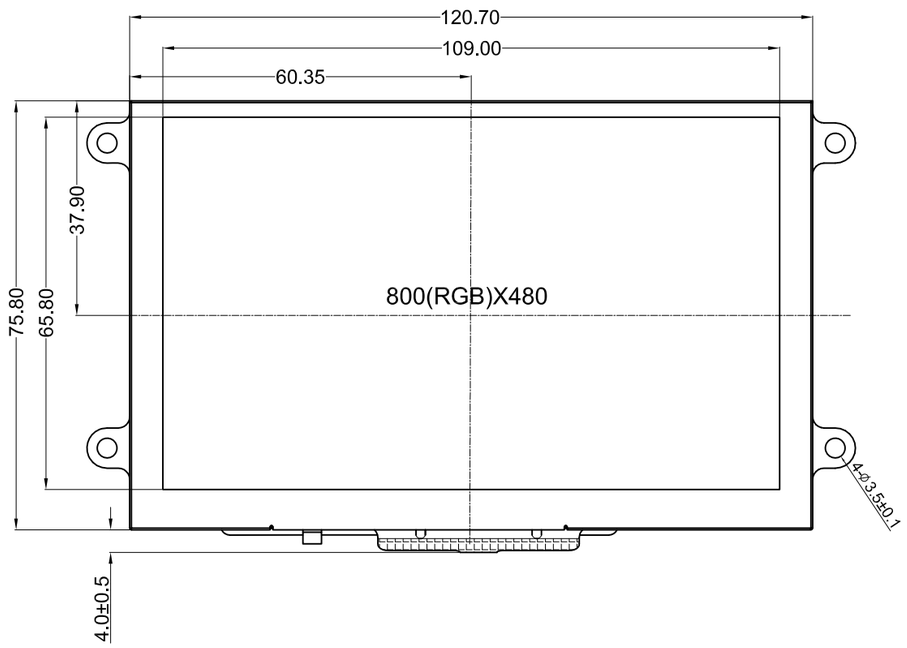

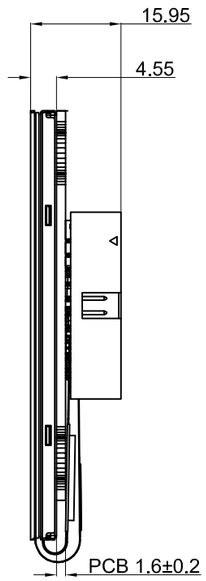

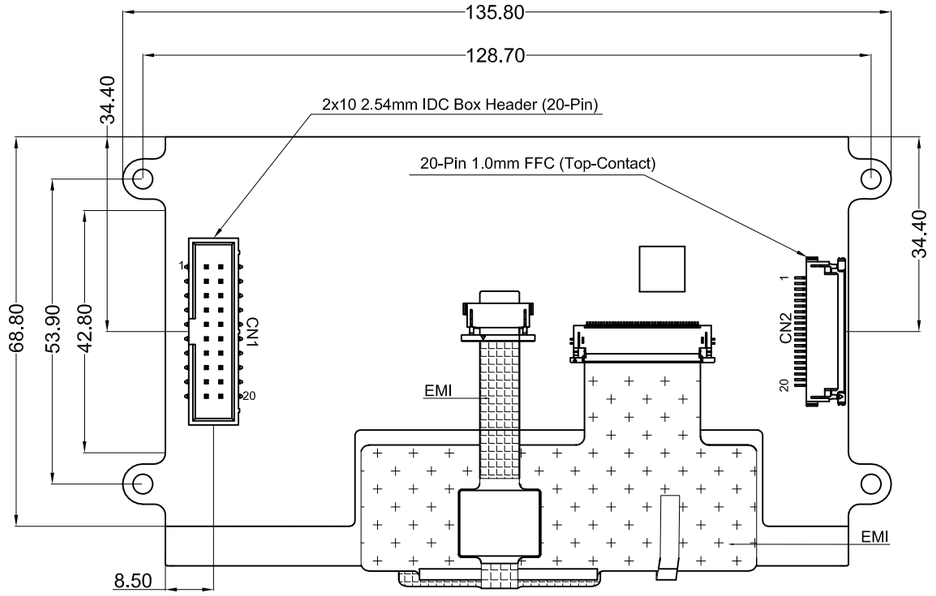

Pin Assignment	
NO.	Symbol
1	VDD
2	GND
3	SCK
4	MISO/IO1
5	MOSI/IO0
6	/CS
7	/INT
8	/PD
9	AUDIO_L
10	NC
11	GPIO0/IO2
12	GPIO1/IO3
13	GPIO2
14	GPIO3
15	NC
16	NC
17	VBL
18	VBL
19	GND
20	GND

Product Description: 5.0” 800x480 IPS EVE2 TFT w/ Capacitive Touch

1. Driver IC: FT813
2. Interface: SPI, D-SPI, Q-SPI
3. Power Requirement: 3.3V EVE2, 3.3V/770mA Backlight
4. Optical Features: Transmissive, Normally Black, 900cd/m²
5. Recommended Cable:
   - CN1: 2x10pin 2.54mm pitch IDC cable
   - CN2: 20pin 1.0mm pitch FFC
6. EMI Shielded FPC

Standard Tolerance:
(Unless otherwise specified)
Linear: ±0.3mm

NEWHAVEN DISPLAY INTERNATIONAL

Drawing/Part Number:	Revision:
NHD-5.0-800480FT-CSXP-CTP	-

Unless otherwise specified:
• Dimensions are in Millimeters
• Third Angle Projection

Drawn By:	Approved By:
K. Lewis	K. Lewis
Drawn Date: 02/28/2023	Approved Date: 02/28/2023

This drawing is solely the property of Newhaven Display International, Inc. The information it contains is not to be disclosed, reproduced or copied in whole or part without written approval from Newhaven Display.

20-Pin 1.0mm FFC (Bottom Contact)

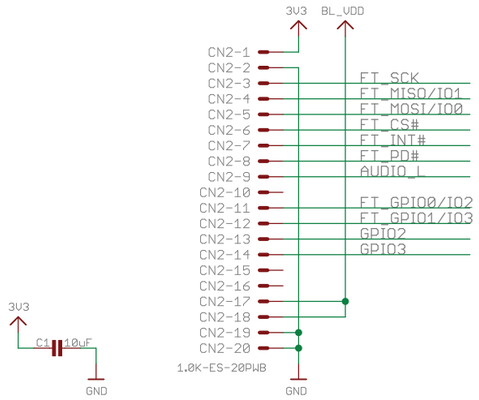

2x10 2.54mm IDC Box Header (20 Pin)

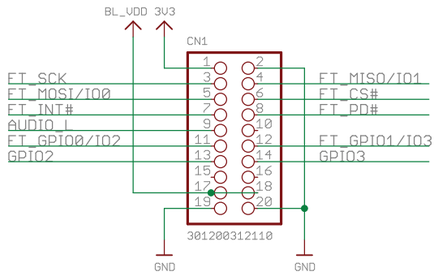

FTDI FT813Q (24 bit RGB Capacitive Touch)

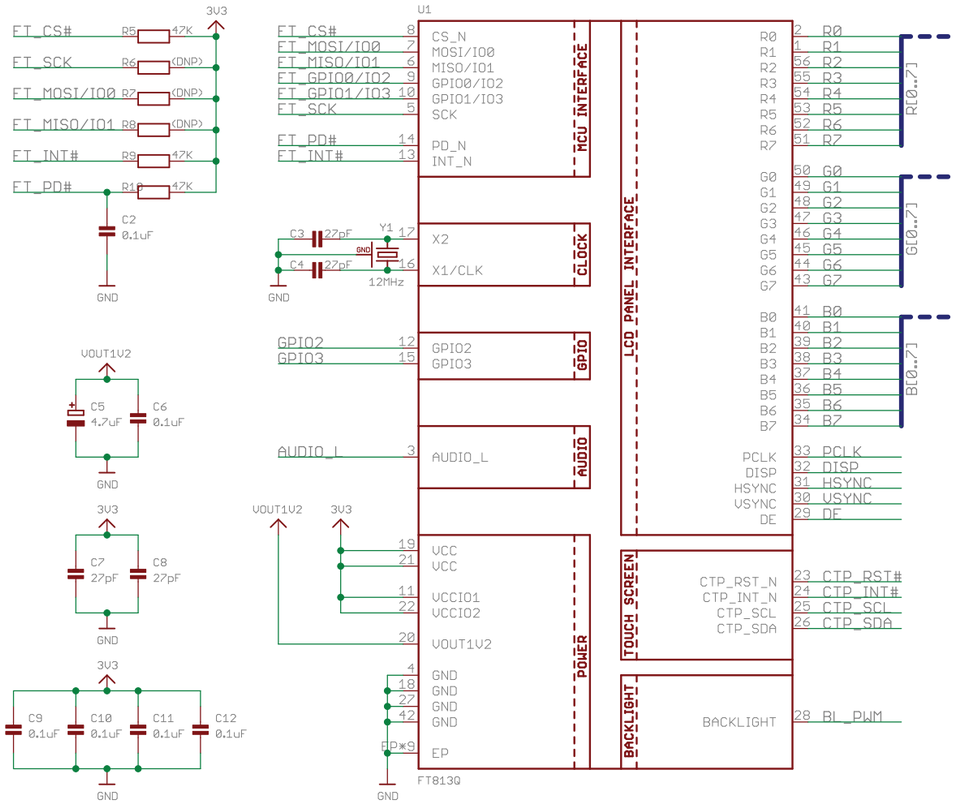

LCD Interface

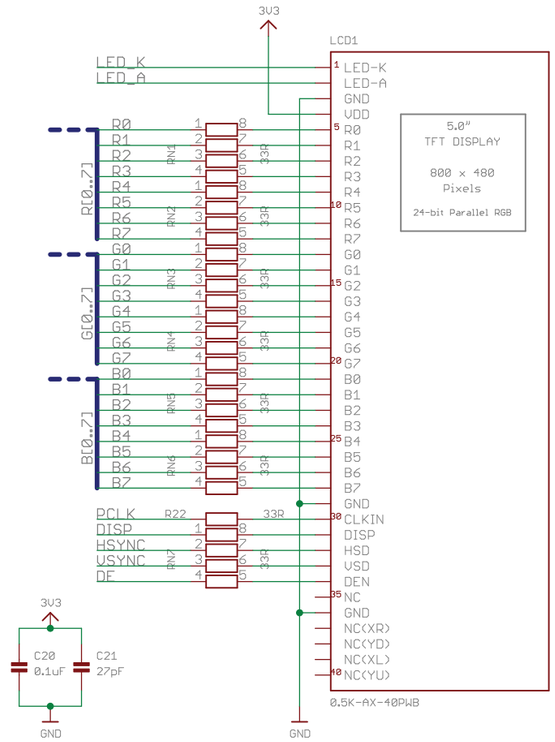

Exposed Pads to Ground TFT Bezel

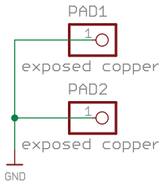

Backlight

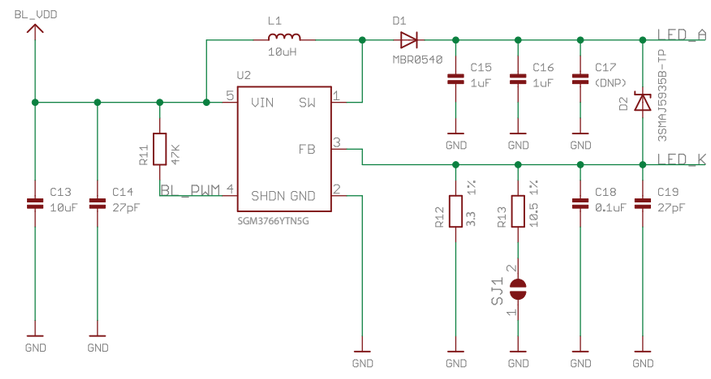

Backlight Configuration		
Current	SJ1	Display
~60mA	Open	ATXL#
~90mA	Close	ASXU#, ASXN#, ASXP

Mounting Holes 3.5mm Plated

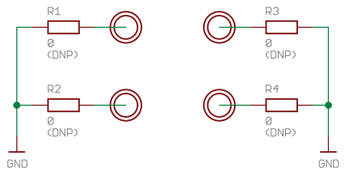

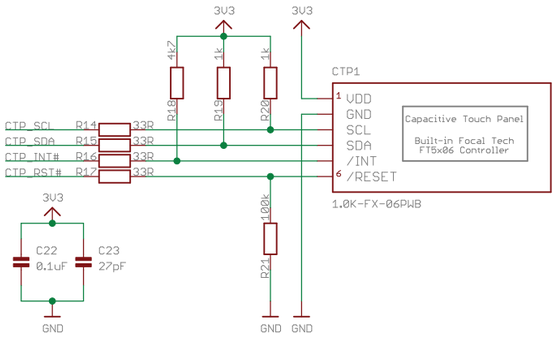

NEWHAVEN DISPLAY INTERNATIONAL

Schematic / Part Number:	Revision:
NHD-5.0C-FT813	1.0
Drawn By: K. Lewis	Checked By: K. Lewis
Drawn Date: 12/02/2022	Checked Date: 12/02/2022

This document and any associated data contain restricted information that is Newhaven Display International, Inc property. Only disclose or duplicate for others as authorized by Newhaven Display.

Pin Description

Pin No.	Symbol	External Connection	Function Description
1	VDD	Power Supply	Input Voltage for TFT and FT81x (3.3V)
2	GND	Power Supply	Ground
3	SCK	MCU	SPI Clock (Input)
4	MISO/IO1	MCU	SPI MISO (Output) / Quad-SPI mode: SPI data line 1
5	MOSI/IO0	MCU	SPI MOSI (Input) / Quad-SPI mode: SPI data line 0
6	/CS	MCU	SPI Chip Select (Input), Active LOW
7	/INT	MCU	Interrupt to host (Output), Active LOW
8	/PD	MCU	Power Down control (Input), Active LOW
9	AUDIO_L	Filter/Amplifier	Audio PWM out (Output)
10	N.C.	-	No Connect
11	GPIO0/IO2	MCU	General Purpose IO0 / SPI Quad mode: SPI data line 2
12	GPIO1/IO3	MCU	General Purpose IO1 / SPI Quad mode: SPI data line 3
13	GPIO2	MCU	General Purpose IO2
14	GPIO3	MCU	General Purpose IO3
15 - 16	N.C.	-	No Connect
17 - 18	VBL	Power Supply	Input Voltage for LED Backlight Driver (3.3V/5V)
19 - 20	GND	Power Supply	Ground

CN1: Male IDC Box Header - 20-Pin, 2x10, 2.54mm pitch.
CN2: FFC Connector - 20-Pin, 1.0mm pitch, Top-contact.

EVE2 Controller Information

This EVE2 TFT Module is powered by the FTDI/Bridgetek FT813 Embedded Video Engine (EVE2).
https://support.newhavendisplay.com/hc/en-us/articles/6963170802839-FT81x

Display Information

TFT Panel Used	Display Type	Luminance Rating	Contrast Ratio	Optimal Viewing Angle	Touch Panel
NHD-5.0-800480AF-ASXP-CTP	IPS	900 cd/m²	1000	80° all angles	PCAP

Electrical Characteristics

Item	Symbol	Condition	Min.	Typ.	Max.	Unit
Operating Temperature Range	T_{OP}	Absolute Max	-20	-	+70	°C
Storage Temperature Range	T_{ST}	Absolute Max	-30	-	+80	°C
Supply Voltage	V_{DD}	-	3.0	3.3	3.6	V
Supply Current	I_{DD}	V_{DD} = 3.3V	-	100	-	mA
"H" Level Input	V_{IH}	-	2.0	-	-	V
"L" Level Input	V_{IL}	-	-	-	0.8	V
"H" Level Output	V_{OH}	-	V_{DD}-0.4	-	-	V
"L" Level Output	V_{OL}	-	-	-	0.4	V
Supply Voltage for LED Backlight Driver	V_{BL}	-	2.8	3.3	5.5	V
Supply Current for LED Backlight Driver	I_{BL}	V_{BL} = 3.3V	-	770	-	mA
	I_{BL}	V_{BL} = 5.0V	-	350	-	mA
Backlight PWM Frequency	f_{PWM}	-	800	-	10,000	Hz

Backlight Driver Configuration

The Backlight Driver Enable signal is connected to the FT81x backlight control pin. This signal is controlled by two registers: REG_PWM_HZ and REG_PWM_DUTY. REG_PWM_HZ specifies the PWM output frequency – the range available on the FT81x is 250 to 10KHz and the on-board backlight driver's PWM frequency is 800 to 100KHz. Therefore, for proper use of the PWM function available on this module, the PWM frequency should not go below 800 or exceed 10KHz.
REG_PWM_DUTY specifies the duty cycle – the range is 0 to 128. A value of 0 turns the backlight completely off, while a value of 128 provides maximum backlight brightness.

For the above register definitions, please refer to pages 80-81 of the official FT81x Series Programmers Guide:
http://www.ftdichip.com/Support/Documents/ProgramGuides/FT81X_Series_Programmer_Guide.pdf

Arduino Application

If using or prototyping this EVE2 TFT Module with the low-cost, widely popular Arduino platform we highly recommend using our Arduino shield, the NHD-FT81x-SHIELD. Not only does the NHD-FT81x-SHIELD provide seamless connectivity and direct software compatibility for the user, but it also comes with the following useful features on-board:

- logic level shifters to allow the 5V Arduino to communicate with the 3.3V FT81x
- regulators to allow the Arduino to output more current to the EVE2 TFT Module
- audio filter/amplifier circuit to utilize the EVE2 TFT Module's audio output signal
- microSD card slot, which allows expandable storage for data such as images, video, and audio to be stored.

Please visit the NHD-FT81x-SHIELD product webpage for more info.

FT81x Block Diagram

FT81x with EVE (Embedded Video Engine) technology simplifies the system architecture for advanced Human Machine Interfaces (HMIs) by providing support for display, touch, and audio as well as an object oriented architecture approach that extends from display creation to the rendering of the graphics.

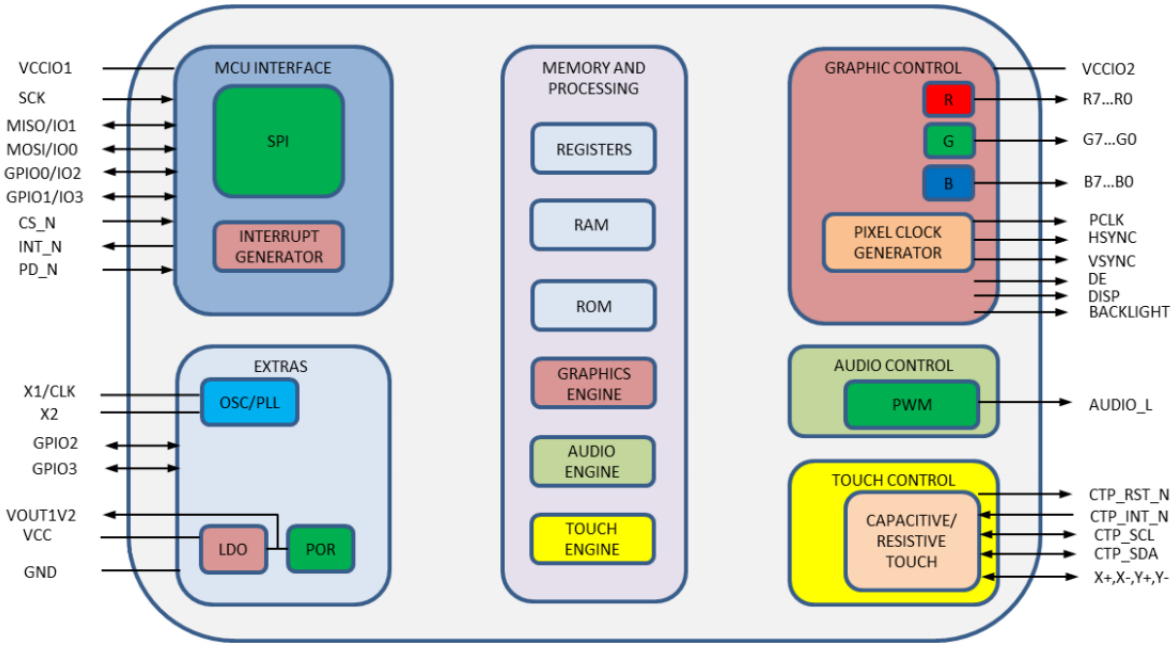

Serial Host Interface

By default the SPI slave operates in the SINGLE channel mode with MOSI as input from the master and MISO as output to the master. DUAL and QUAD channel modes can be configured through the SPI slave itself. To change the channel modes, write to register REG_SPI_WIDTH. Please refer to the table below:

REG_SPI_WIDTH[1:0]	Channel Mode	Data Pins	Max Bus Speed
00	SINGLE (default)	MISO, MOSI	30MHz
01	DUAL	IO0, IO1	30MHz
10	QUAD	IO0, IO1, IO2, IO3	25MHz
11	Reserved	-	-

For more details on the FT81x SPI interface, please refer to pages 13-15 of the official FT81x Datasheet:
https://support.newhavendisplay.com/hc/en-us/articles/6963170802839-FT81x

For the REG_SPI_WIDTH register definition, please refer to page 87 of the official FT81x Series Programmers Guide:
http://www.ftdichip.com/Support/Documents/ProgramGuides/FT81X_Series_Programmer_Guide.pdf

TFT Timing Characteristics

Shown below are the FT81x registers that control the TFT's timing (clock and sync signals), along with the values recommended to use for this EVE2 TFT Module:

Horizontal Timing

Register	Value
REG_HSIZE	800
REG_HCYCLE	928
REG_HOFFSET	88
REG_HSYNC0	0
REG_HSYNC1	48

Vertical Timing

Register	Value
REG_VSIZE	480
REG_VCYCLE	525
REG_VOFFSET	32
REG_VSYNC0	0
REG_VSYNC1	3

Clock Settings

Register	Value
REG_PCLK	2
REG_SWIZZLE	0
REG_PCLK_POL	0
REG_CSPREAD	0
REG_DITHER	1

Graphics Engine

The graphics engine executes the display list once for every horizontal line. It executes the primitive objects in the display list and constructs the display line buffer. The horizontal pixel content in the line buffer is updated if the object is visible at the horizontal line.

Main features of the graphics engine are:

- The primitive objects supported by the graphics processor are: lines, points, rectangles, bitmaps (comprehensive set of formats), text display, plotting bar graph, edge strips, and line strips, etc.
- Operations such as stencil test, alpha blending and masking are useful for creating a rich set of effects such as shadows, transitions, reveals, fades and wipes.
- Anti-aliasing of the primitive objects (except bitmaps) gives a smoothing effect to the viewer.
- Bitmap transformations enable operations such as translate, scale and rotate.
- Display pixels are plotted with 1/16th pixel precision.
- Four levels of graphics states
- Tag buffer detection

The graphics engine also supports customized built-in widgets and functionalities such as jpeg decode, screen saver, calibration etc. The graphics engine interprets commands from the MPU host via a 4 Kbyte FIFO in the FT81x memory at RAM_CMD. The MPU/MCU writes commands into the FIFO, and the graphics engine reads and executes the commands. The MPU/MCU updates the register REG_CMD_WRITE to indicate that there are new commands in the FIFO, and the graphics engine updates REG_CMD_READ after commands have been executed.

Main features supported are:

- Drawing of widgets such as buttons, clock, keys, gauges, text displays, progress bars, sliders, toggle switches, dials, gradients, etc.
- JPEG and motion-JPEG decode
- Inflate functionality (zlib inflate is supported)
- Timed interrupt (generate an interrupt to the host processor after a specified number of milliseconds)
- In-built animated functionalities such as displaying logo, calibration, spinner, screen saver and sketch
- Snapshot feature to capture the current graphics display

For a complete list of graphics engine display commands and widgets, please refer to Chapter 4 of the official FT81x Series Programmers Guide:
http://www.ftdichip.com/Support/Documents/ProgramGuides/FT81X_Series_Programmer_Guide.pdf

Touch-Screen Engine

The Capacitive Touch Screen Engine (CTSE) of the FT813 communicates with the external Capacitive Touch Panel Module (CTPM) through an I2C interface. The CTPM will assert its interrupt line when there is a touch detected. Upon detecting CTP_INT_N line active, the FT813 will read the touch data through I2C. Up to 5 touches can be reported and stored in FT813 registers.

For more details on the FT813 Touch-Screen Engine, please refer to pages 32-35 of the official FT81x Datasheet:
https://support.newhavendisplay.com/hc/en-us/articles/6963170802839-FT81x

Audio Engine

The FT81x provides mono audio output through a PWM output pin, AUDIO_L. It outputs two audio sources, the sound synthesizer and audio file playback.
This pin is designed to be passed into a simple filter circuit and then passed to an amplifier for best results. Please refer to the example schematic in the Audio Filter and Amplifier Reference Circuit section on the next page.

Sound Synthesizer

A sound processor, AUDIO ENGINE, generates the sound effects from a small ROM library of waves table. To play a sound effect listed in Table 4.3, load the REG_SOUND register with a code value and write 1 to the REG_PLAY register. The REG_PLAY register reads 1 while the effect is playing and returns a ‘0’ when the effect ends. Some sound effects play continuously until interrupted or instructed to play the next sound effect. To interrupt an effect, write a new value to REG_SOUND and REG_PLAY registers; e.g. write 0 (Silence) to REG_SOUND and 1 to PEG_PLAY to stop the sound effect.

The sound volume is controlled by register REG_VOL_SOUND. The 16-bit REG_SOUND register takes an 8-bit sound in the low byte. For some sounds, marked "pitch adjust" in the table below, the high 8 bits contain a MIDI note value. For these sounds, a note value of zero indicates middle C. For other sounds the high byte of REG_SOUND is ignored.

Audio Playback

The FT81x can play back recorded sound through its audio output. To do this, load the original sound data into the FT81x's RAM, and set registers to start the playback. The registers controlling audio playback are:

REG_PLAYBACK_START:	The start address of the audio data.
REG_PLAYBACK_LENGTH:	The length of the audio data, in bytes.
REG_PLAYBACK_FREQ:	The playback sampling frequency, in Hz.
REG_PLAYBACK_FORMAT:	The playback format, one of LINEAR SAMPLES, uLAW SAMPLES, or ADPCM SAMPLES.
REG_PLAYBACK_LOOP:	If '0', the sample is played once. If '1', the sample is repeated indefinitely.
REG_PLAYBACK_PLAY:	A write to this location triggers the start of audio playback, regardless of writing '0' or '1'. Read back '1' when playback is ongoing, and '0' when playback finishes.
REG_VOL_PB:	Playback volume, 0-255.

The mono audio formats supported are 8-bits PCM, 8-bits uLAW and 4-bits IMA-ADPCM. For ADPCM_SAMPLES, each sample is 4 bits, so two samples are packed per byte, the first sample is in bits 0-3 and the second is in bits 4-7.
The current audio playback read pointer can be queried by reading the REG_PLAYBACK_READPTR. Using a large sample buffer, looping, and this read pointer, the host MPU/MCU can supply a continuous stream of audio.

For more details on the FT81x Audio Engine, please refer to pages 30-32 of the official FT81x Datasheet:
https://support.newhavendisplay.com/hc/en-us/articles/6963170802839-FT81x

Audio Filter and Amplifier Reference Circuit

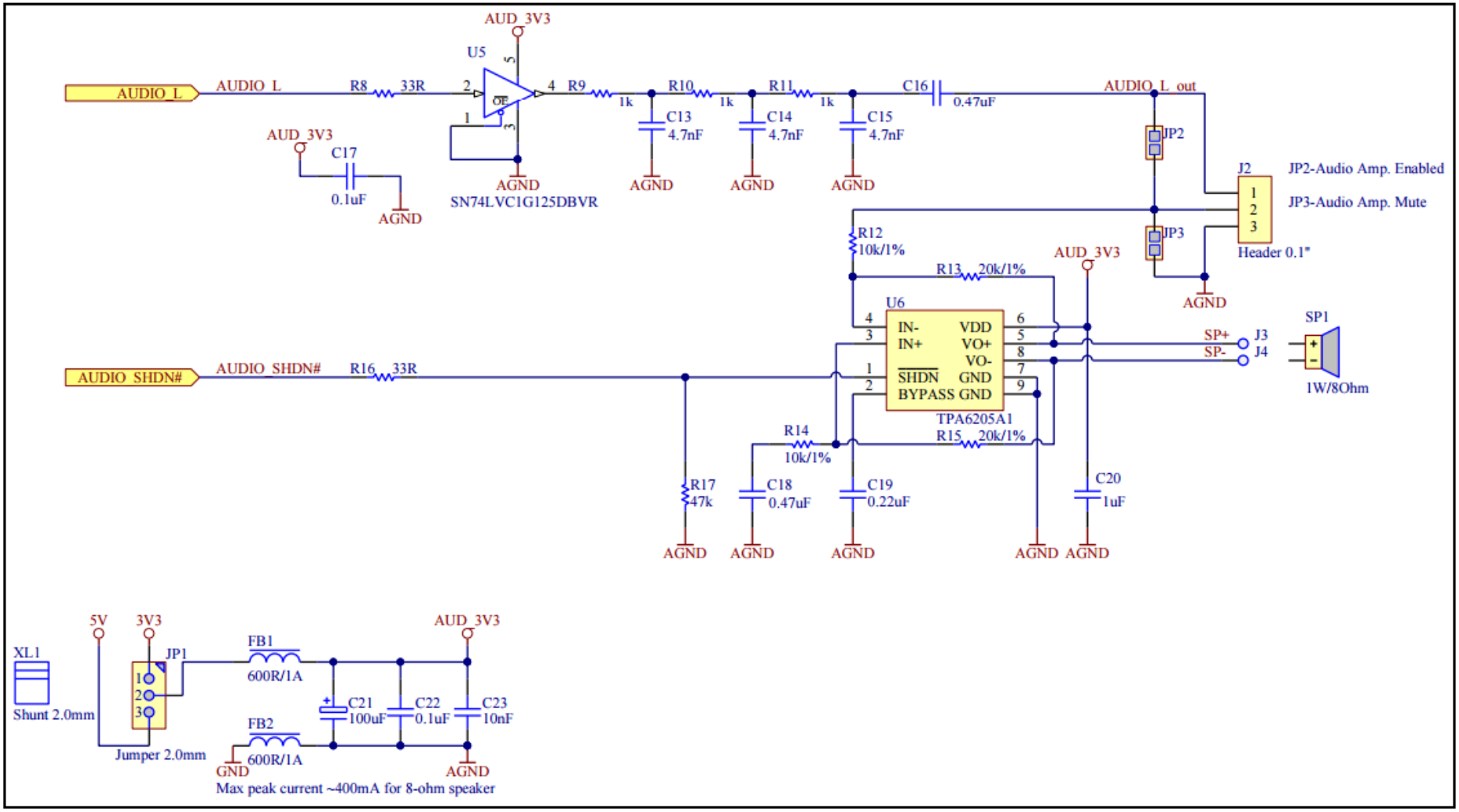

This is a reference schematic from FTDI, which can be used to successfully filter and amplify the audio signals coming from the NHD EVE2 TFT Module.

Additional EVE2 Resources

FT81x Datasheet:

FTDI/Bridgetek FT81x Embedded Video Engine (EVE2)
https://support.newhavendisplay.com/hc/en-us/articles/6963170802839-FT81x

Programmers Guide:

FT81x Series Programmers Guide
http://www.ftdichip.com/Support/Documents/ProgramGuides/FT81X_Series_Programmer_Guide.pdf

NHD GitHub Page:

NHD EVE2 TFT Module Example Projects
https://github.com/NewhavenDisplay/EVE2-TFT-Modules

EVE2 Software Examples:

FT81x Example Projects
http://www.ftdichip.com/Support/SoftwareExamples/FT800_Projects.htm

FTDI/Bridgetek Utilities:

Screen Designer
http://www.ftdichip.com/Support/Utilities.htm#ESD3

Image Converters
http://www.ftdichip.com/Support/Utilities.htm#EVEImageConverters

Audio Converter
http://www.ftdichip.com/Support/Utilities.htm#EVEAudioConverter

Font Converter
http://www.ftdichip.com/Support/Utilities.htm#EVEFontConverter

FT80x to FT81x Migration Guide:

FT80x to FT81x Migration Guide
http://www.ftdichip.com/Support/Documents/AppNotes/AN_390%20FT80x%20To%20FT81x%20Migration%20Guide.pdf

Quality Information

Test Item	Content of Test	Test Condition	Note
High Temperature storage	Endurance test applying the high storage temperature for a long time.	+80°C , 240hrs	2
Low Temperature storage	Endurance test applying the low storage temperature for a long time.	-30°C , 240hrs	1,2
High Temperature Operation	Endurance test applying the electric stress (voltage & current) and the high thermal stress for a long time.	+70°C , 120hrs	2
Low Temperature Operation	Endurance test applying the electric stress (voltage & current) and the low thermal stress for a long time.	-20°C , 120hrs	1,2
High Temperature / Humidity Operation	Endurance test applying the electric stress (voltage & current) and the high thermal with high humidity stress for a long time.	+50°C , 90-95% RH , 120hrs	1,2
Thermal Shock resistance	Endurance test applying the electric stress (voltage & current) during a cycle of low and high thermal stress.	-30°C,30min -> 25°C,5min - >80°C,30min = 1 cycle 10 cycles	
Vibration test	Endurance test applying vibration to simulate transportation and use.	Frequency: 250 r/min Amplitude: 1 inch Time: 45 min	3
Static electricity test	Endurance test applying electric static discharge.	Air: 8kV, 150pF, Contact: 4kV, for 5 times each.	

Note 1: No condensation to be observed.
Note 2: Conducted after 4 hours of storage at 25°C, 0%RH.
Note 3: Test performed on product itself, not inside a container.