IGBT 4 Pack Module, 75 A

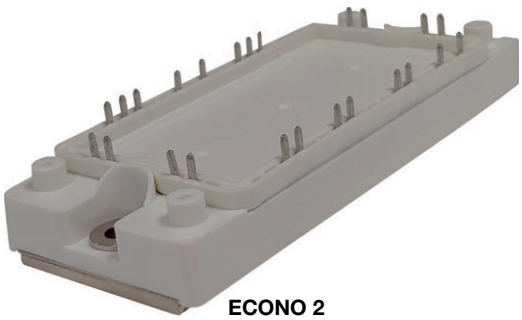

ECONO 2
(Package example)

FEATURES

- Trench gate field stop
- Square RBSOA
- HEXFRED® low Q_{rr}, low switching energy
- Positive $V_{CE(on)}$ temperature coefficient
- Copper baseplate
- Low stray inductance design
- UL approved file E78996
- Material categorization: for definitions of compliance please see www.vishay.com/doc?99912

Pb-free

RoHS COMPLIANT

BENEFITS

- Benchmark efficiency for SMPS appreciation in particular HF welding
- Rugged transient performance
- Low EMI, requires less snubbing
- Direct mounting to heatsink space saving
- PCB solderable terminals
- Low junction to case thermal resistance

PRIMARY CHARACTERISTICS	
V_{CES}	1200 V
I_C at T_C = 87 °C	75 A
$V_{CE(on)}$ (typical)	2.20 V
Speed	8 kHz to 30 kHz
Package	ECONO 2
Circuit configuration	4 pack with thermistor

ABSOLUTE MAXIMUM RATINGS				
PARAMETER	SYMBOL	TEST CONDITIONS	MAX.	UNITS
Collector to emitter voltage	V_{CES}		1200	V
Continuous collector current	I_C	T_C = 25 °C	118	A
		T_C = 80 °C	81	
Pulsed collector current (See fig. C.T.5)	I_{CM}	T_J = 150 °C, t_p = 6 ms, V_{GE} = 15 V	270	
Clamped inductive load current	I_{LM}		250	
Diode continuous forward current	I_F	T_C = 25 °C	60	
		T_C = 80 °C	40	
Diode maximum forward current	I_{FM}		150	
Gate to emitter voltage	V_{GE}		± 20	V
Maximum power dissipation (IGBT)	P_D	T_C = 25 °C	431	W
		T_C = 80 °C	241	
Isolation voltage	V_{ISOL}		AC 2500 (min)	V

For technical questions within your region: DiodesAmericas@vishay.com, DiodesAsia@vishay.com, DiodesEurope@vishay.com

THIS DOCUMENT IS SUBJECT TO CHANGE WITHOUT NOTICE. THE PRODUCTS DESCRIBED HEREIN AND THIS DOCUMENT ARE SUBJECT TO SPECIFIC DISCLAIMERS, SET FORTH AT www.vishay.com/doc?91000

ELECTRICAL SPECIFICATIONS (T_J = 25 °C unless otherwise specified)						
PARAMETER	SYMBOL	TEST CONDITIONS	MIN.	TYP.	MAX.	UNITS
Collector to emitter breakdown voltage	$V_{BR(CES)}$	V_{GE} = 0 V, I_C = 4 mA	1200	-	-	V
Collector to emitter voltage	$V_{CE(on)}$	I_C = 75 A, V_{GE} = 15 V	-	2.20	2.60	
		I_C = 75 A, V_{GE} = 15 V, T_J = 125 °C	-	2.44	-	
Gate threshold voltage	$V_{GE(th)}$	V_{CE} = V_{GE}, I_C = 4 mA	4.6	5.9	7.6	
Threshold voltage temperature coefficient	$\Delta V_{GE(th)}/\Delta T_J$	V_{CE} = V_{GE}, I_C = 4 mA (25 °C to 125 °C)	-	-13	-	mV/°C
Zero gate voltage collector current	I_{CES}	V_{GE} = 0 V, V_{CE} = 1200 V	-	1.4	100	µA
		V_{GE} = 0 V, V_{CE} = 1200 V, T_J = 125 °C	-	1130	-	
Diode forward voltage drop	V_{FM}	I_F = 75 A	-	3.7	4.9	V
		I_F = 75 A, T_J = 125 °C	-	3.7	-	
Gate to emitter leakage current	I_{GES}	V_{GE} = ± 20 V	-	-	± 200	nA

SWITCHING CHARACTERISTICS (T_J = 25 °C unless otherwise noted)							
PARAMETER	SYMBOL	TEST CONDITIONS		MIN.	TYP.	MAX.	UNITS
Total gate charge (turn-on)	Q_G	I_C = 75 A V_{CC} = 960 V V_{GE} = 15 V		-	333	-	nC
Gate to emitter charge (turn-on)	Q_{GE}			-	36	-	
Gate to collector charge (turn-on)	Q_{GC}			-	173	-	
Turn-on switching loss	E_{on}	I_C = 75 A, V_{CC} = 600 V V_{GE} = 15 V, R_g = 5 Ω, L = 500 µH T_J = 25 °C (1)		-	1.85	-	mJ
Turn-off switching loss	E_{off}			-	2.51	-	
Total switching loss	E_{tot}			-	4.36	-	
Turn-on switching loss	E_{on}	I_C = 75 A, V_{CC} = 600 V V_{GE} = 15 V, R_g = 5 Ω, L = 500 µH T_J = 125 °C (1)		-	3.17	-	
Turn-off switching loss	E_{off}			-	4.23	-	
Total switching loss	E_{tot}			-	7.40	-	
Turn-on delay time	$t_{d(on)}$	I_C = 75 A, V_{CC} = 600 V V_{GE} = 15 V, R_g = 5 Ω, L = 500 µH T_J = 125 °C		-	92	-	ns
Rise time	t_r			-	20	-	
Turn-off delay time	$t_{d(off)}$			-	153	-	
Fall time	t_f			-	178	-	
Reverse bias safe operating area	RBSOA	T_J = 150 °C, I_C = 250 A, V_{CC} = 700 V, V_P = 1200 V, R_g = 10 Ω, V_{GE} = 15 V to 0 V		Fullsquare			
Short circuit safe operating area	SCSOA	T_J = 150 °C, V_{CC} = 600 V, V_P = 1200 V R_g = 10 Ω, V_{GE} = 15 V to 0 V		10	-	-	µs
Diode peak reverse recovery current	I_{rr}	T_J = 25 °C	V_{CC} = 200 V I_F = 50 A dI/dt = 200 A/µs	-	13	-	A
		T_J = 125 °C		-	19	-	
Diode reverse recovery time	t_{rr}	T_J = 25 °C		-	132	-	ns
		T_J = 125 °C		-	200	-	
Total reverse recovery charge	Q_{rr}	T_J = 25 °C		-	858	-	nC
		T_J = 125 °C		-	1900	-	

Note

(1) Energy losses include “tail” and diode reverse recovery

INTERNAL NTC - THERMISTOR SPECIFICATIONS				
PARAMETER	SYMBOL	TEST CONDITIONS	VALUE	UNITS
Resistance	R25	T_C = 25 °C	5000	Ω
	R100	T_C = 100 °C	493 ± 5 %	
B-value	$B_{25/50}$	R_2 = R_{25} exp. [$B_{25/50}$ (1/T_2 - 1/(298.15 K))]	3375 ± 5 %	K
Maximum operating temperature			220	°C
Dissipation constant			2	mW/°C
Thermal time constant			8	s

For technical questions within your region: DiodesAmericas@vishay.com, DiodesAsia@vishay.com, DiodesEurope@vishay.com
THIS DOCUMENT IS SUBJECT TO CHANGE WITHOUT NOTICE. THE PRODUCTS DESCRIBED HEREIN AND THIS DOCUMENT ARE SUBJECT TO SPECIFIC DISCLAIMERS, SET FORTH AT www.vishay.com/doc?91000

THERMAL AND MECHANICAL SPECIFICATIONS					
PARAMETER	**SYMBOL**	**MIN.**	**TYP.**	**MAX.**	**UNITS**
Junction and storage temperature range	T_J, T_{Stg}	-40	-	150	°C
Junction-to-case IGBT	R_{thJC}	-	-	0.29	°C/W
Junction-to-case diode	R_{thJC}	-	-	0.56	
Case to sink per module	R_{thCS}	-	0.02	-	
Mounting torque (M5)		2.7	-	3.3	Nm
Weight		-	170	-	g

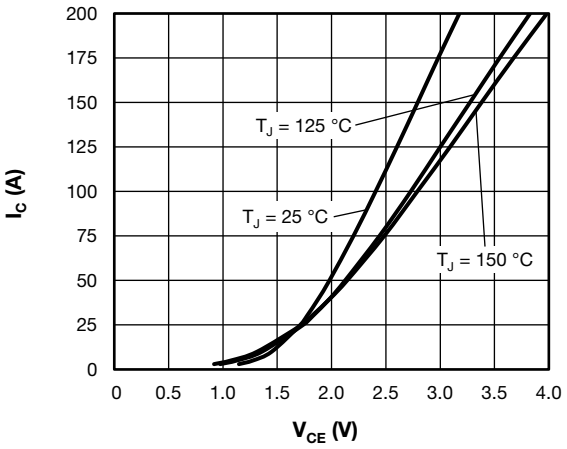

Fig. 1 - Typical Trench IGBT Output Characteristics, V_{GE} = 15 V

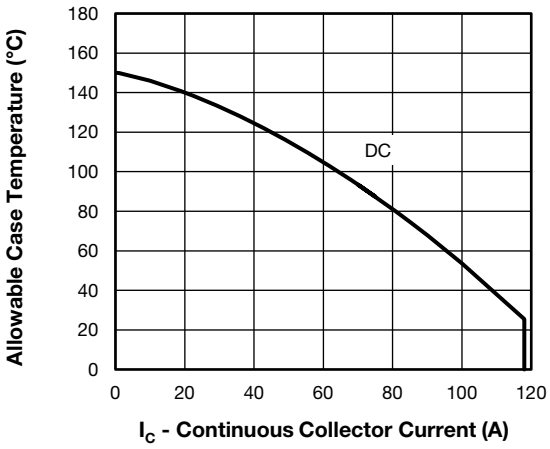

Fig. 3 - Maximum Trench IGBT Continuous Collector Current vs. Case Temperature

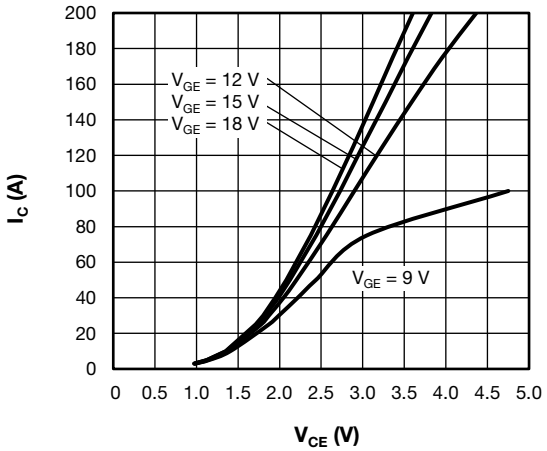

Fig. 2 - Typical Trench IGBT Output Characteristics, T_J = 125 °C

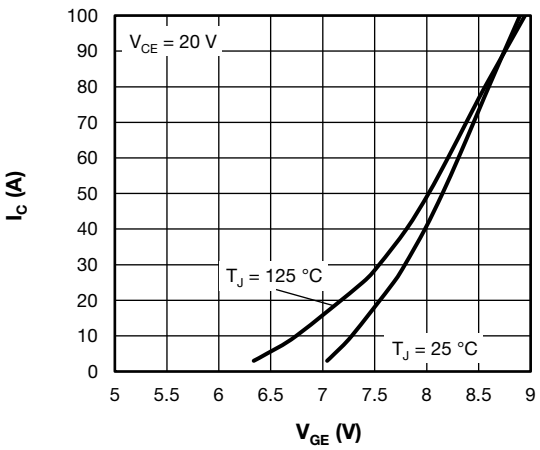

Fig. 4 - Typical Trench IGBT Transfer Characteristics

For technical questions within your region: DiodesAmericas@vishay.com, DiodesAsia@vishay.com, DiodesEurope@vishay.com
THIS DOCUMENT IS SUBJECT TO CHANGE WITHOUT NOTICE. THE PRODUCTS DESCRIBED HEREIN AND THIS DOCUMENT ARE SUBJECT TO SPECIFIC DISCLAIMERS, SET FORTH AT www.vishay.com/doc?91000

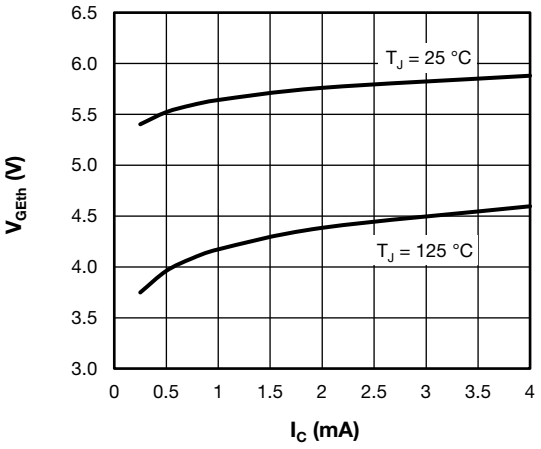

Fig. 5 - Typical Trench IGBT Gate Threshold Voltage

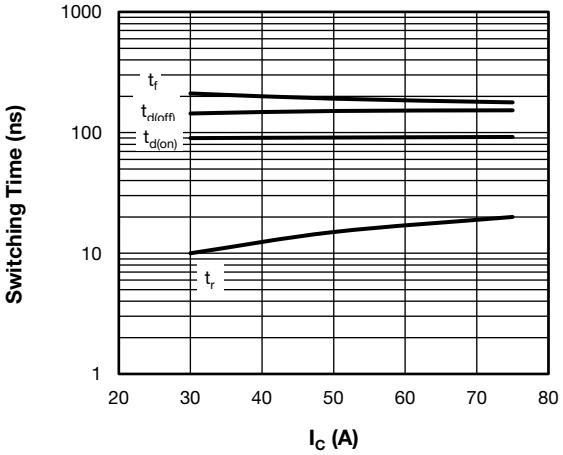

Fig. 8 - Typical Trench IGBT Switching Time vs. I_C
(with Antiparallel Diode)
T_J = 125 °C, V_{CC} = 600 V, R_g = 4.7 Ω, V_{GE} = +15V/-15V, L = 500 µH

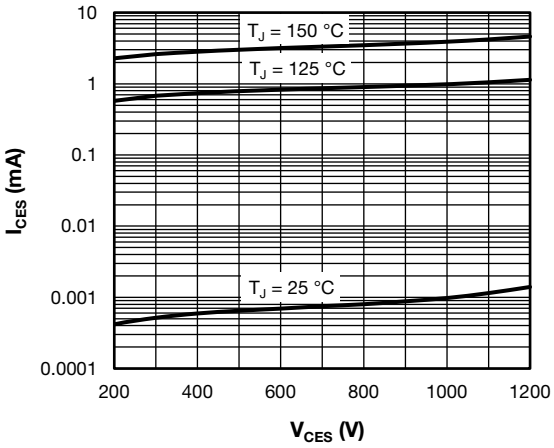

Fig. 6 - Typical Trench IGBT Zero Gate Voltage Collector Current

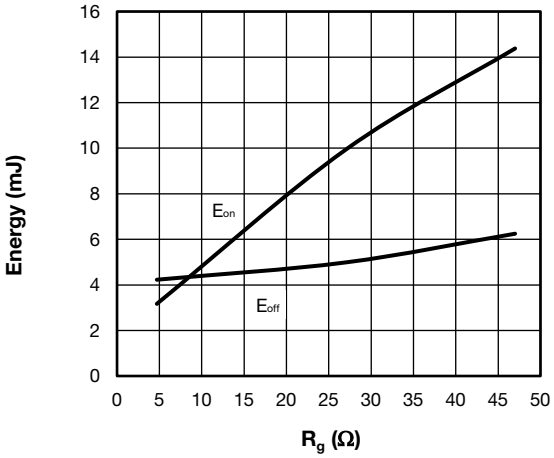

Fig. 9 - Typical Trench IGBT Energy Loss vs. R_g
(with Antiparallel Diode)
T_J = 125 °C, V_{CC} = 600 V, I_C = 75 A, V_{GE} = +15V/-15V, L = 500 µH

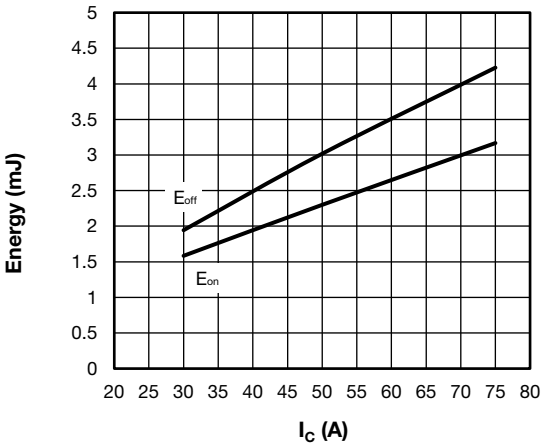

Fig. 7 - Typical Trench IGBT Energy Loss vs. I_C
(with Antiparallel Diode)
T_J = 125 °C, V_{CC} = 600 V, R_g = 4.7 Ω, V_{GE} = +15V/-15V, L = 500 µH

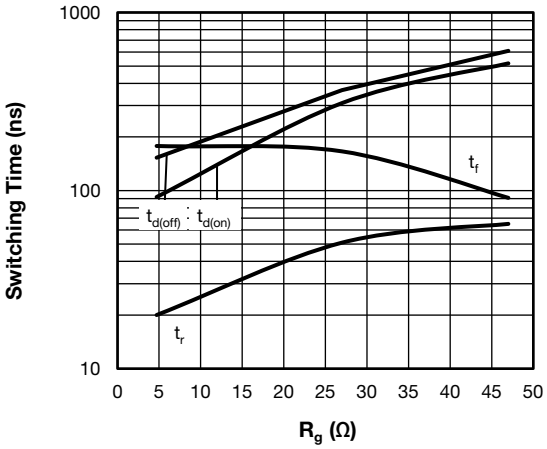

Fig. 10 - Typical Trench IGBT Switching Time vs. R_g
(with Antiparallel Diode)
T_J = 125 °C, V_{CC} = 600 V, I_C = 75 A, V_{GE} = +15V/-15V, L = 500 µH

For technical questions within your region: DiodesAmericas@vishay.com, DiodesAsia@vishay.com, DiodesEurope@vishay.com
THIS DOCUMENT IS SUBJECT TO CHANGE WITHOUT NOTICE. THE PRODUCTS DESCRIBED HEREIN AND THIS DOCUMENT ARE SUBJECT TO SPECIFIC DISCLAIMERS, SET FORTH AT www.vishay.com/doc?91000

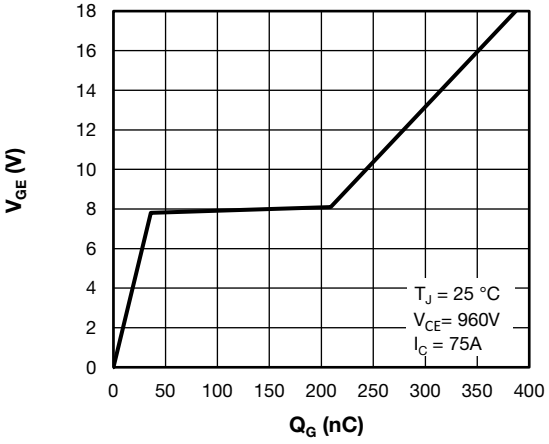

Fig. 11 - Typical Trench IGBT Gate charge vs. Gate to Emitter Voltage

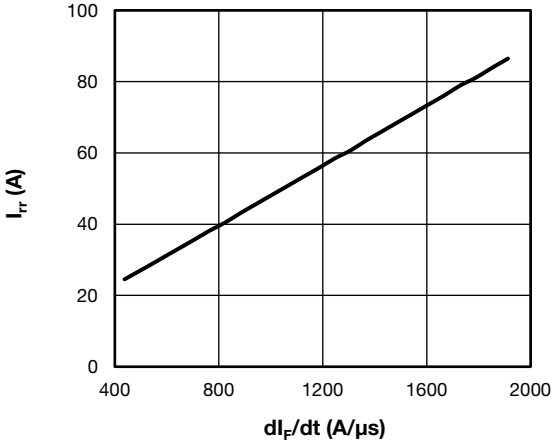

Fig. 14 - Typical Diode I_{rr} vs. dI_F/dt
V_{CC} = 400 V; V_{GE} = 15 V; I_{CE} = 5.0 A; T_J = 150 °C

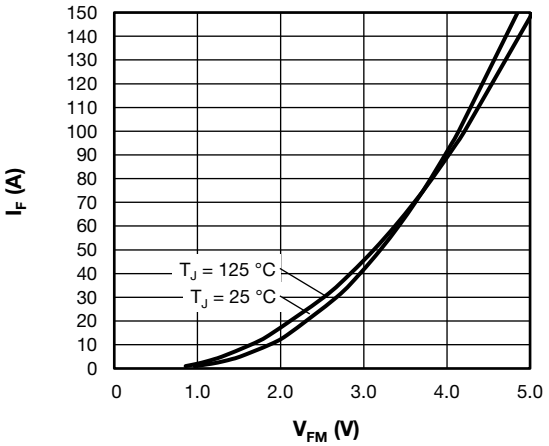

Fig. 12 - Typical Diode Forward Characteristics
t_p = 80 µs

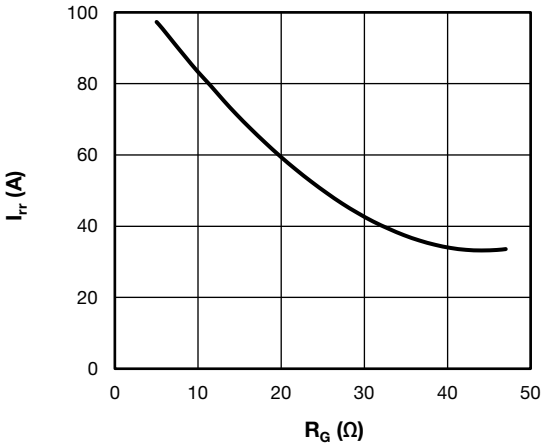

Fig. 15 - Typical Diode I_{rr} vs. R_g
T_J = 150 °C; I_F = 5.0 A

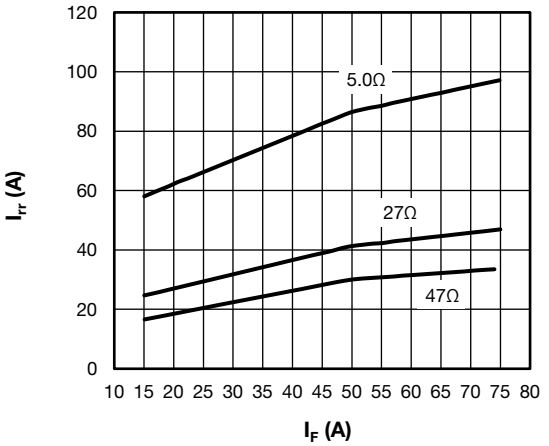

Fig. 13 - Typical Diode I_{rr} vs. I_F,
T_J = 150 °C

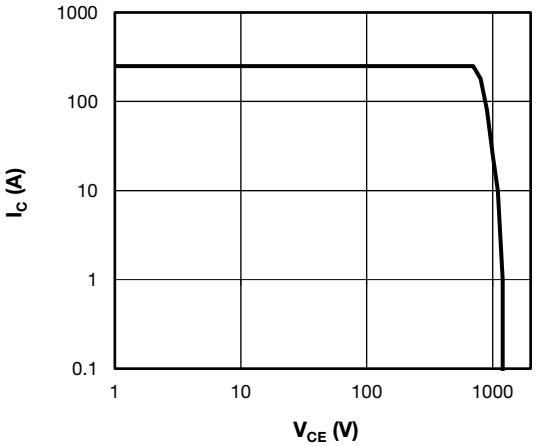

Fig. 16 - Trench IGBT Reverse BIAS SOA
T_J = 150 °C, I_C = 250 A, R_g = 10 Ω, V_{GE} = +15 V/0 V, V_{CC} = 700 V, V_p = 1200 V

For technical questions within your region: DiodesAmericas@vishay.com, DiodesAsia@vishay.com, DiodesEurope@vishay.com
THIS DOCUMENT IS SUBJECT TO CHANGE WITHOUT NOTICE. THE PRODUCTS DESCRIBED HEREIN AND THIS DOCUMENT ARE SUBJECT TO SPECIFIC DISCLAIMERS, SET FORTH AT www.vishay.com/doc?91000

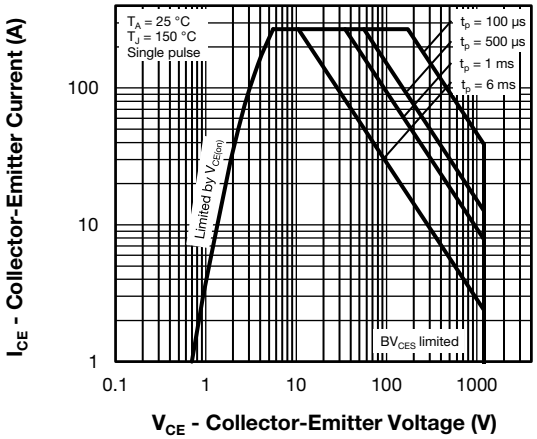

Fig. 17 - Trench IGBT Safe Operating Area

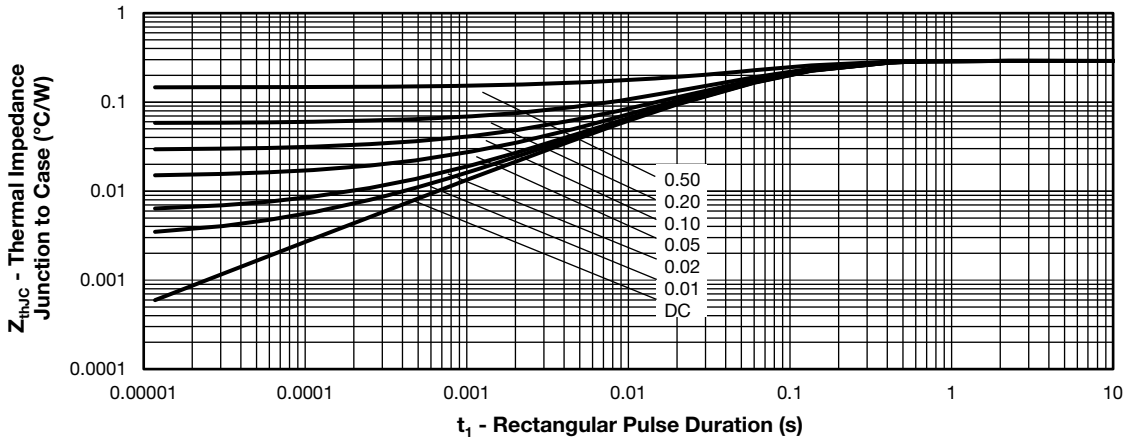

Fig. 18 - Maximum Trench IGBT Thermal Impedance Z_{thJC} Characteristics

For technical questions within your region: DiodesAmericas@vishay.com, DiodesAsia@vishay.com, DiodesEurope@vishay.com
THIS DOCUMENT IS SUBJECT TO CHANGE WITHOUT NOTICE. THE PRODUCTS DESCRIBED HEREIN AND THIS DOCUMENT ARE SUBJECT TO SPECIFIC DISCLAIMERS, SET FORTH AT www.vishay.com/doc?91000

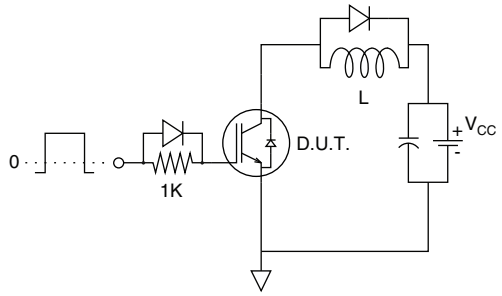

Fig. 19 - Gate Charge Circuit (Turn-Off)

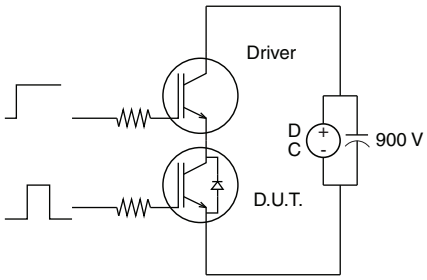

Fig. 21 - S.C. SOA Circuit

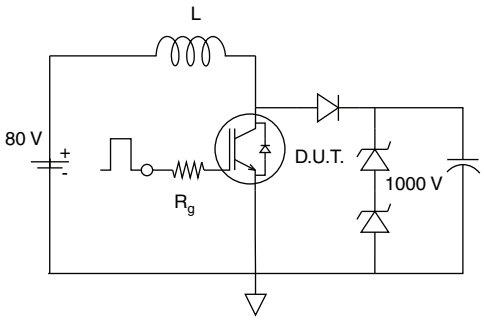

Fig. 20 - RBSOA Circuit

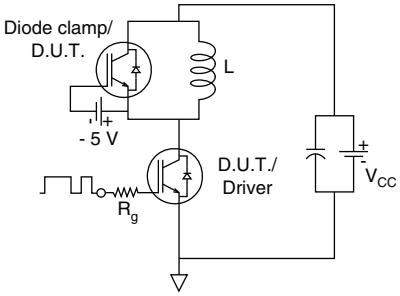

Fig. 22 - Switching Loss Circuit

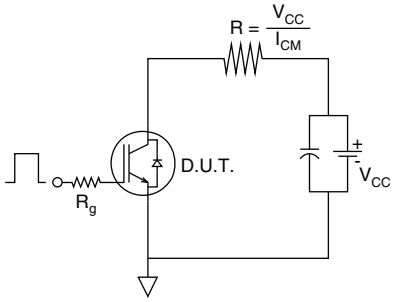

Fig. 23 - Resistive Load Circuit

For technical questions within your region: DiodesAmericas@vishay.com, DiodesAsia@vishay.com, DiodesEurope@vishay.com
THIS DOCUMENT IS SUBJECT TO CHANGE WITHOUT NOTICE. THE PRODUCTS DESCRIBED HEREIN AND THIS DOCUMENT ARE SUBJECT TO SPECIFIC DISCLAIMERS, SET FORTH AT www.vishay.com/doc?91000

ORDERING INFORMATION TABLE

Device code

VS-	G	T	75	Y	F	120	U	T
1	2	3	4	5	6	7	8	9

1	-	Vishay Semiconductors product
2	-	Insulated gate bipolar transistor (IGBT)
3	-	T = Trench gate field stop IGBT
4	-	Current rating (75 = 75 A)
5	-	Circuit configuration (Y = 4 pack)
6	-	Package indicator (F = ECONO 2)
7	-	Voltage rating (120 = 1200 V)
8	-	Speed/type (U = ultrafast IGBT)
9	-	T = NTC thermistor

CIRCUIT CONFIGURATION

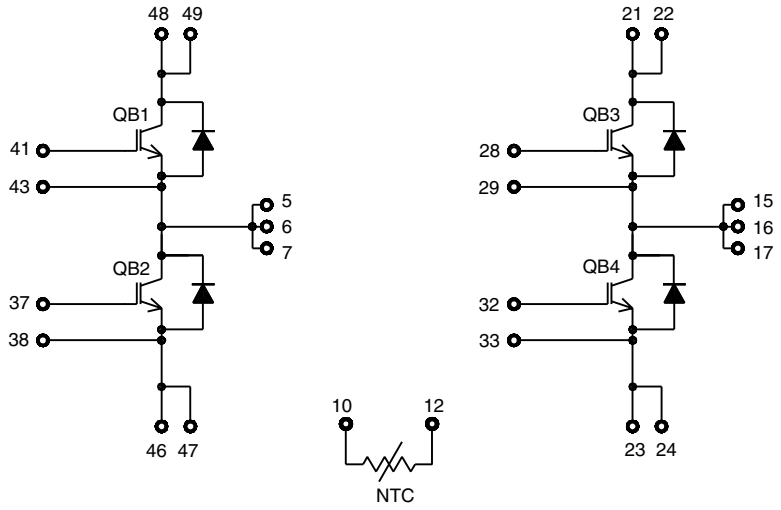

For technical questions within your region: DiodesAmericas@vishay.com, DiodesAsia@vishay.com, DiodesEurope@vishay.com
THIS DOCUMENT IS SUBJECT TO CHANGE WITHOUT NOTICE. THE PRODUCTS DESCRIBED HEREIN AND THIS DOCUMENT ARE SUBJECT TO SPECIFIC DISCLAIMERS, SET FORTH AT www.vishay.com/doc?91000

DIMENSIONS in millimeters

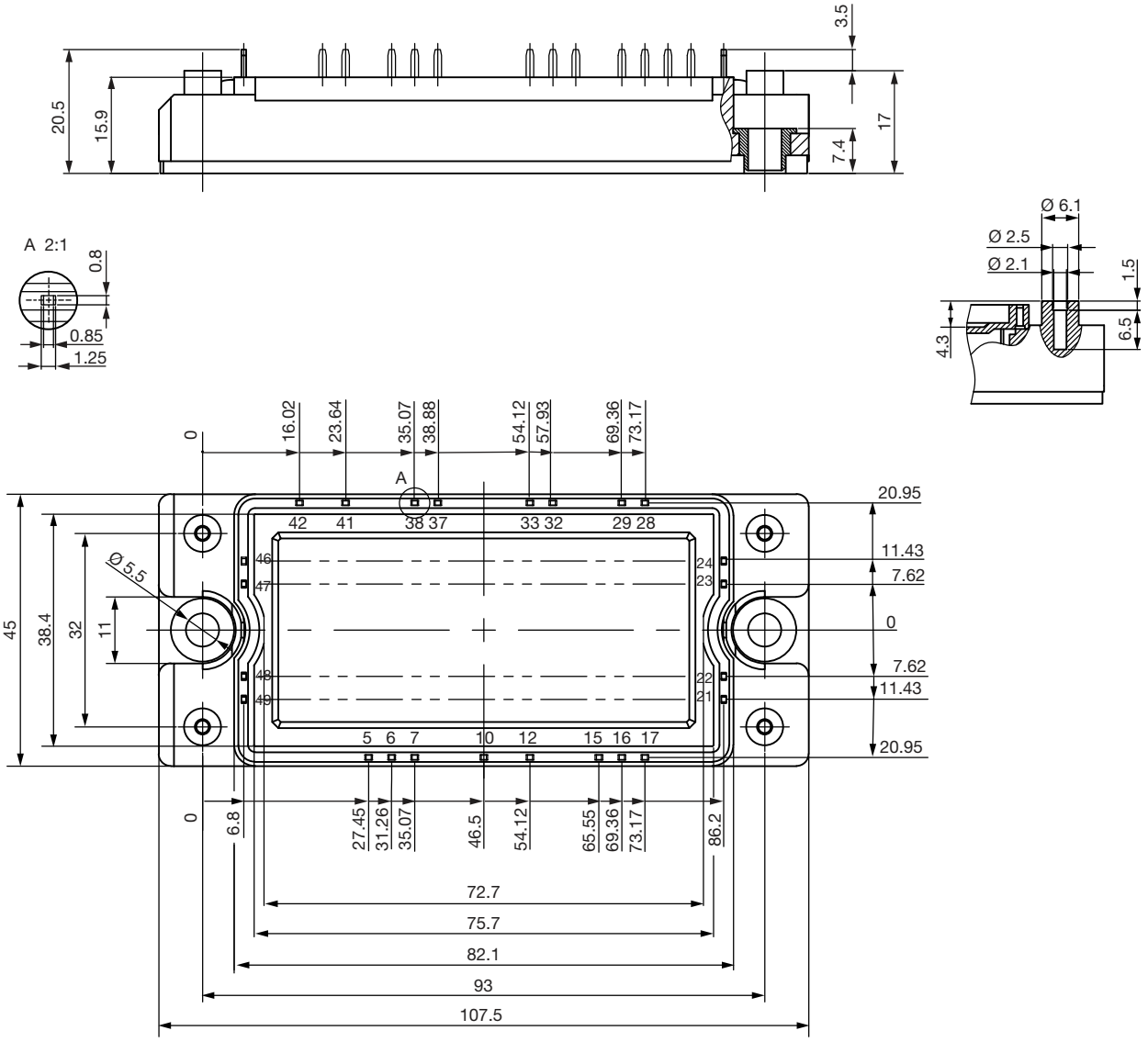

For technical questions within your region: DiodesAmericas@vishay.com, DiodesAsia@vishay.com, DiodesEurope@vishay.com
THIS DOCUMENT IS SUBJECT TO CHANGE WITHOUT NOTICE. THE PRODUCTS DESCRIBED HEREIN AND THIS DOCUMENT ARE SUBJECT TO SPECIFIC DISCLAIMERS, SET FORTH AT www.vishay.com/doc?91000

Disclaimer

ALL PRODUCT, PRODUCT SPECIFICATIONS AND DATA ARE SUBJECT TO CHANGE WITHOUT NOTICE TO IMPROVE RELIABILITY, FUNCTION OR DESIGN OR OTHERWISE.

Vishay Intertechnology, Inc., its affiliates, agents, and employees, and all persons acting on its or their behalf (collectively, “Vishay”), disclaim any and all liability for any errors, inaccuracies or incompleteness contained in any datasheet or in any other disclosure relating to any product.

Vishay makes no warranty, representation or guarantee regarding the suitability of the products for any particular purpose or the continuing production of any product. To the maximum extent permitted by applicable law, Vishay disclaims (i) any and all liability arising out of the application or use of any product, (ii) any and all liability, including without limitation special, consequential or incidental damages, and (iii) any and all implied warranties, including warranties of fitness for particular purpose, non-infringement and merchantability.

Statements regarding the suitability of products for certain types of applications are based on Vishay's knowledge of typical requirements that are often placed on Vishay products in generic applications. Such statements are not binding statements about the suitability of products for a particular application. It is the customer's responsibility to validate that a particular product with the properties described in the product specification is suitable for use in a particular application. Parameters provided in datasheets and / or specifications may vary in different applications and performance may vary over time. All operating parameters, including typical parameters, must be validated for each customer application by the customer's technical experts. Product specifications do not expand or otherwise modify Vishay's terms and conditions of purchase, including but not limited to the warranty expressed therein.

Hyperlinks included in this datasheet may direct users to third-party websites. These links are provided as a convenience and for informational purposes only. Inclusion of these hyperlinks does not constitute an endorsement or an approval by Vishay of any of the products, services or opinions of the corporation, organization or individual associated with the third-party website. Vishay disclaims any and all liability and bears no responsibility for the accuracy, legality or content of the third-party website or for that of subsequent links.

Except as expressly indicated in writing, Vishay products are not designed for use in medical, life-saving, or life-sustaining applications or for any other application in which the failure of the Vishay product could result in personal injury or death. Customers using or selling Vishay products not expressly indicated for use in such applications do so at their own risk. Please contact authorized Vishay personnel to obtain written terms and conditions regarding products designed for such applications.

No license, express or implied, by estoppel or otherwise, to any intellectual property rights is granted by this document or by any conduct of Vishay. Product names and markings noted herein may be trademarks of their respective owners.

© 2024 VISHAY INTERTECHNOLOGY, INC. ALL RIGHTS RESERVED