SP1020 Series 20pF 30kV Bidirectional Discrete TVS

HF RoHS Pb GREEN

Description

The SP1020 includes back-to-back Zener diodes fabricated in a proprietary silicon avalanche technology to provide protection for electronic equipment that may experience destructive electrostatic discharges (ESD). These robust diodes can safely absorb repetitive ESD strikes above the maximum level specified in the IEC 61000-4-2 international standard (Level 4, ±8kV contact discharge) without performance degradation. The back-to-back configuration provides symmetrical ESD protection for data lines when AC signals are present.

Pinout

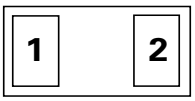

Note: Drawing not to scale

Features

- RoHS compliant, Halogen-free and Lead-free
- ESD, IEC 61000-4-2, ±30kV contact, ±30kV air
- EFT, IEC 61000-4-4, 40A (5/50ns)
- Lightning, IEC 61000-4-5, 2nd Edition, 5A (t_P=8/20µs)
- Low capacitance of 20pF (@ V_R=0V)
- Low leakage current of 0.1µA at 5V
- Industry's smallest ESD footprint available (01005)

Functional Block Diagram

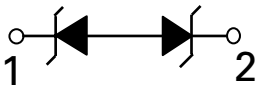

Applications

- Mobile Phones
- Smart Phones
- Portable Medical
- Digital Cameras
- Wearable Technology
- Portable Navigation Devices
- Tablets

Life Support Note:

Not Intended for Use in Life Support or Life Saving Applications

The products shown herein are not designed for use in life sustaining or life saving applications unless otherwise expressly indicated.

©2015 Littelfuse, Inc.
Specifications are subject to change without notice.
Revision: 11/23/16

Absolute Maximum Ratings

Symbol	Parameter	Value	Units
I_{PP}	Peak Current (t_p=8/20µs)	5.0 [1]	A
T_{OP}	Operating Temperature	-40 to 125	°C
T_{STOR}	Storage Temperature	-55 to 150	°C

Notes:

1. CAUTION: Stresses above those listed in "Absolute Maximum Ratings" may cause permanent damage to the device. This is a stress only rating and operation of the device at these or any other conditions above those indicated in the operational sections of this specification is not implied.

Thermal Information

Parameter	Rating	Units
Storage Temperature Range	-55 to 150	°C
Maximum Junction Temperature	150	°C
Maximum Lead Temperature (Soldering 20-40s)	260	°C

Electrical Characteristics (T_{OP}=25°C)

Parameter	Symbol	Test Conditions	Min	Typ	Max	Units
Reverse Standoff Voltage	V_{RWM}				6.0	V
Leakage Current	I_{LEAK}	V_R=3.3V with 1 pin at GND[1]			10	nA
		V_R=5V with 1 pin at GND		0.1	0.5	µA
Clamp Voltage[1]	V_C	I_{PP}=1A, t_p=8/20µs, Fwd		9.3		V
		I_{PP}=2A, t_p=8/20µs, Fwd		10.0		V
Dynamic Resistance[2]	R_{DYN}	TLP, t_P=100ns, I/O to GND, 8/20µs Dynamic Resistance		0.32		Ω
ESD Withstand Voltage[1]	V_{ESD}	IEC 61000-4-2 (Contact Discharge)	±30			kV
		IEC 61000-4-2 (Air Discharge)	±30			kV
Diode Capacitance[1]	C_D	Reverse Bias=0V		20		pF

Note:

1 Parameter is guaranteed by design and/or device characterization.

2 Transmission Line Pulse (TLP) with 100ns width and 200ps rise time.

Pulse Waveform

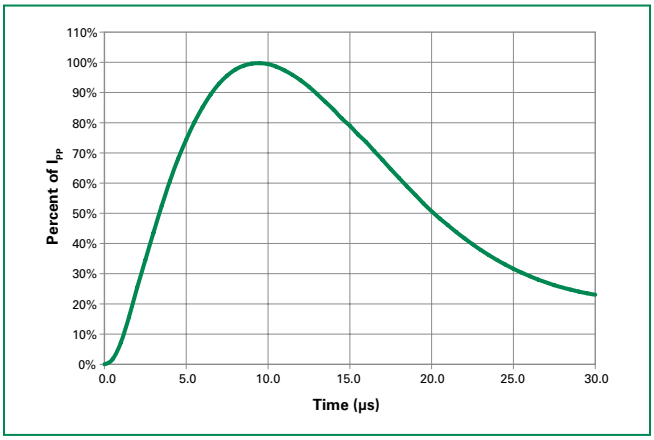

Capacitance vs. Reverse Bias

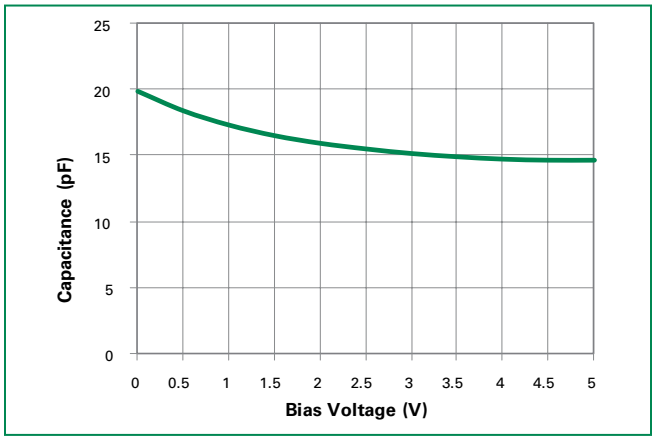

©2015 Littelfuse, Inc.
Specifications are subject to change without notice.

Clamping Voltage vs I_{PP}

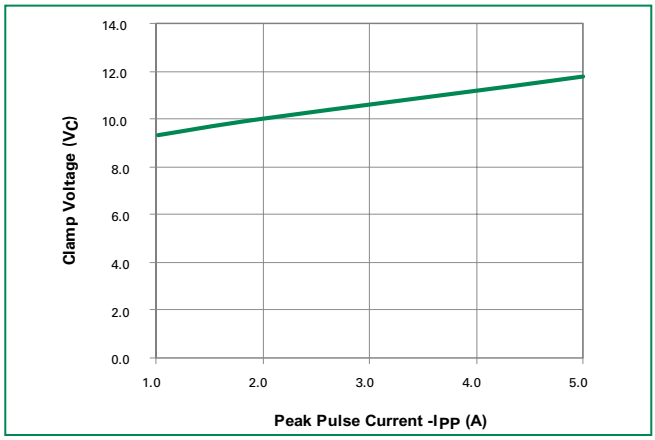

Transmission Line Pulsing (TLP) Plot

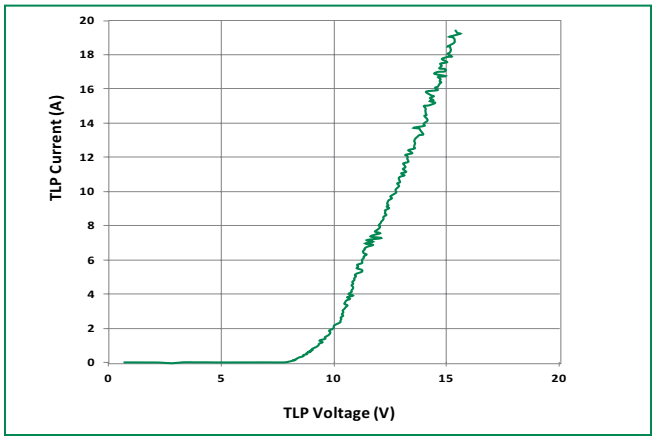

Soldering Parameters

Reflow Condition		Pb – Free assembly
Pre Heat	- Temperature Min ($T_{s(min)}$)	150°C
	- Temperature Max ($T_{s(max)}$)	200°C
	- Time (min to max) (t_s)	60 – 180 secs
Average ramp up rate (Liquidus) Temp (T_L) to peak		3°C/second max
$T_{S(max)}$ to T_L - Ramp-up Rate		3°C/second max
Reflow	- Temperature (T_L) (Liquidus)	217°C
	- Temperature (t_L)	60 – 150 seconds
Peak Temperature (T_P)		$260^{+0/-5}$ °C
Time within 5°C of actual peak Temperature (t_p)		20 – 40 seconds
Ramp-down Rate		6°C/second max
Time 25°C to peak Temperature (T_P)		8 minutes Max.
Do not exceed		260°C

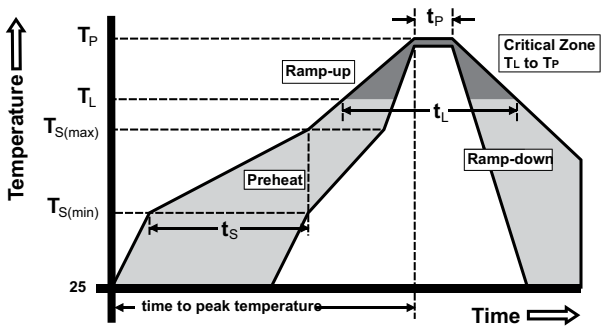

Part Marking System

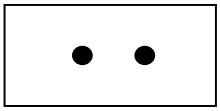

Part Numbering System

SP 1020 – 01 W T G

- SP: TVS Diode Arrays (SPA® Diodes)
- 1020: Series
- 01: Number of Channels
- W: Package — W: 01005 Flipchip
- T: T= Tape & Reel
- G: G= Green

Ordering Information

Part Number	Package	Marking	Min. Order Qty.
SP1020-01WTG	01005 Flipchip	• •	15000

©2015 Littelfuse, Inc.
Specifications are subject to change without notice.

Package Dimensions — 01005 Flipchip

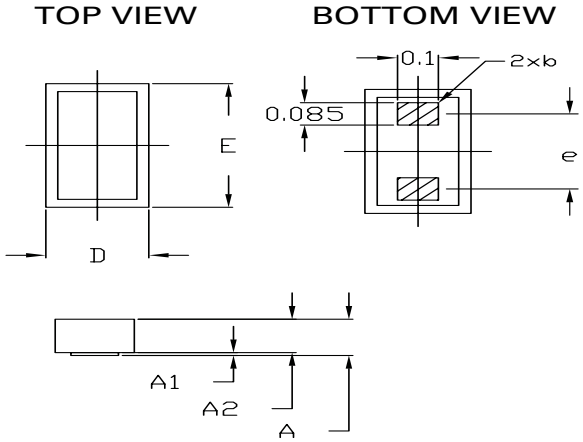

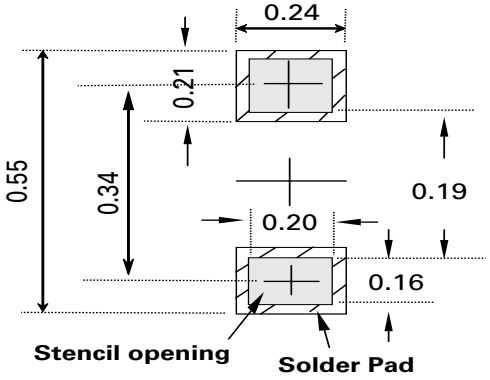

Recommended Solder Pad Footprint and Stencil opening

Thickness of Stencil opening is 0.08mm

***Sizes in mm**

Symbol	01005 Flipchip					
	Millimeters			Inches		
	Min	Typ	Max	Min	Typ	Max
A	0.153	0.181	0.209	0.0060	0.0071	0.0082
A1	0.008	0.011	0.0143	0.0003	0.0004	0.0006
A2	0.145	0.170	0.195	0.0057	0.0067	0.0077
D	0.205	0.230	0.255	0.0081	0.0091	0.0100
E	0.415	0.440	0.465	0.0163	0.0173	0.0183

Embossed Carrier Tape & Reel Specification — 01005 Flipchip

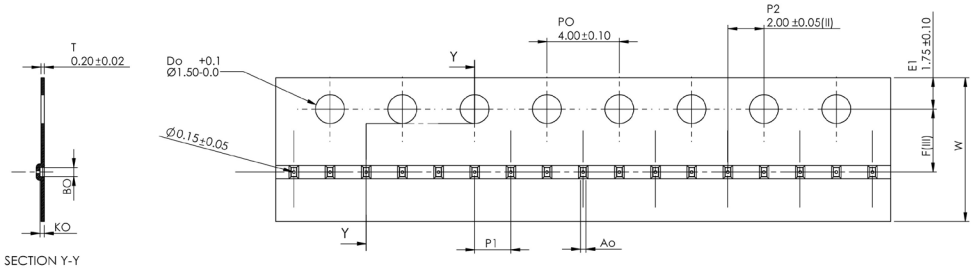

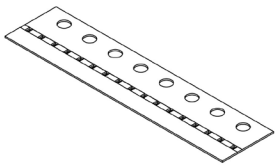

Symbol	Millimeters
A0	0.30+/-0.03
B0	0.51+/-0.03
K0	0.20 + 0.03
F	3.50 +/- 0.05
P1	2.00+/-0.10
W	8.00+/-0.10

©2015 Littelfuse, Inc.
Specifications are subject to change without notice.