A-EXSH-M25-68L-S-S - Screw plug

1411108

https://www.phoenixcontact.com/us/products/1411108

Please be informed that the data shown in this PDF document is generated from our online catalog. Please find the complete data in the user documentation. Our general terms of use for downloads are valid.



Screw plug, material for screw connection: Stainless steel 316L, application: Ex, connecting thread: M25 x 1.5, color: silver

Commercial data

Item number	1411108
Packing unit	20 pc
Minimum order quantity	20 pc
Sales key	BF68
Product key	BF7DDX
Catalog page	Page 654 (C-3-2019)
GTIN	4046356922234
Weight per piece (including packing)	87.565 g
Weight per piece (excluding packing)	87.565 g
Customs tariff number	73269098
Country of origin	GB

Technical data

Notes

Note on Ex protection	This item must only be used with counter nut 1411250 A-INL-M25-S-S for the Ex e type of protection.

Product properties

Product type	Plug for cable screw gland
Application	Ex
Manufacturer	CMP
Manufacturer Designation	757 M25 EExde HEX HD STOP PLUG ST. STEEL
Manufacturer product number	757DM34

Ex data

Suited for EX-applications	yes

Dimensions

Dimensional drawing	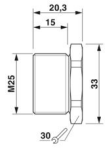
Length	24 mm
Length of the connecting thread	15 mm
Length without connecting thread	9 mm
Diameter	25 mm
Connecting thread diameter	25 mm
Wrench size, union nut	30 mm
Hexagon angular dimension	33 mm
Thread type connection side	M25 x 1.5
Thread pitch	1.5 mm

Material specifications

Material for screw connection	Stainless steel 316L

Environmental and real-life conditions

Ambient conditions

Degree of protection	IP66 (using the corresponding A-SEW-...P-W flat gasket)
	IP68 (using the corresponding A-SEW-...P-W flat gasket)
Ambient temperature (operation)	-60 °C ... 130 °C

Approvals

	Sira 01ATEX1284U

ATEX	Sira 02ATEX1003X
	Ex II 2 GD Ex d IIC & Ex e II, Ex IM2 Ex d I, Ex e I
IECEx	IECEx SIR 07.0056X
	Ex d I / Ex e I / Ex d IIC / Ex e II, Ex tD A21 IP6X

Standards and regulations

EN Ex

Standards/specifications	EN 60079-0, -1, -7

IEC Ex

Standards/specifications	IEC 60079-0, -1, -7

EN Ex

Standards/specifications	EN 61241-0, -1

IEC Ex

Standards/specifications	IEC 61241-0, -1

Mounting

Assembly note	Sealed to IP66/IP68 thanks to the use of the A-SEW-25-P-W flat gasket (item 1411284)

Drawings

Dimensional drawing

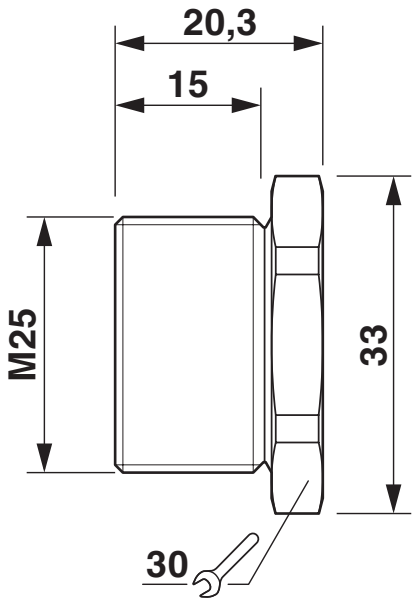

Approvals

To download certificates, visit the product detail page: https://www.phoenixcontact.com/us/products/1411108

CSA
Approval ID: 113642

UL Listed
Approval ID: E214221

ATEX
Approval ID: CML 18ATEX1320X

Classifications

ECLASS

ECLASS-11.0	23111190
ECLASS-12.0	23111190
ECLASS-13.0	23111190

ETIM

ETIM 9.0	EC000032

UNSPSC

UNSPSC 21.0	31261500

Environmental product compliance

EU RoHS

Fulfills EU RoHS substance requirements	Yes
Exemption	6(c)

China RoHS

Environment friendly use period (EFUP)	EFUP-50
	An article-related China RoHS declaration table can be found in the download area for the respective article under "Manufacturer declaration". For all articles with EFUP-E, no China RoHS declaration table issued and required.

EU REACH SVHC

REACH candidate substance (CAS No.)	Lead(CAS: 7439-92-1)
SCIP	5c04e2ba-ef6a-4450-bcb2-a51aaba31742

Accessories

A-SEW-25-P-W - Flat gasket

1411284

https://www.phoenixcontact.com/us/products/1411284

Flat gasket, for threads M25, color: white



A-INL-M25-S-S - Counter nut

1411250

https://www.phoenixcontact.com/us/products/1411250

Counter nut, for threads M25 x 1.5, color: silver



Phoenix Contact 2024 © - all rights reserved
https://www.phoenixcontact.com

Phoenix Contact USA
586 Fulling Mill Road
Middletown, PA 17057, United States
(+717) 944-1300
info@phoenixcon.com