NBC-M12MSD/3,0-93E/R4AC - Network cable

1403499

https://www.phoenixcontact.com/us/products/1403499

Please be informed that the data shown in this PDF document is generated from our online catalog. Please find the complete data in the user documentation. Our general terms of use for downloads are valid.



Network cable, Ethernet CAT5 (100 Mbps), 4-position, PUR halogen-free, water blue RAL 5021, shielded (Advanced Shielding Technology), Plug straight M12, coding: D / IP67, on Plug straight RJ45 / IP20, cable length: 3 m

Commercial data

Item number	1403499
Packing unit	1 pc
Minimum order quantity	1 pc
Sales key	BF04
Product key	BF1CJI
GTIN	4046356656191
Weight per piece (including packing)	156.3 g
Weight per piece (excluding packing)	152.1 g
Customs tariff number	85444290
Country of origin	PL

Technical data

Notes

General	Further products with variable cable type and variable cable length can be found in the accessories section

Product properties

Product type	Data cable preassembled
Application	Standard
Sensor type	Ethernet
Number of positions	4
Shielded	yes

Insulation characteristics

Overvoltage category	I
Degree of pollution	2

Interfaces

Bus system	Ethernet
Signal type/category	Ethernet CAT5 (IEC 11801), 100 Mbps

Signaling

Status display	no
Status display present	No

Electrical properties

Nominal voltage U_N	48 V AC
	60 V DC
Transmission medium	Copper
Transmission characteristics (category)	CAT5 (IEC 11801:2002)

Material specifications

Flammability rating according to UL 94	V2

Connector

Connection 1

Dimensional drawing	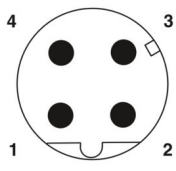 Pin assignment M12 male connector, 4-pos., D-coded, male side
Type	M12 Plug, straight, 4-position, shielded (Advanced Shielding Technology), Keying: D

Number of positions	4
Shielded	yes
Shielding	Advanced Shielding Technology
Signal type/category	Ethernet CAT5 (IEC 11801), 100 Mbps
Insertion/withdrawal cycles	≥ 100
Insulation resistance	≥ 100 MΩ
Overvoltage category	II
Degree of pollution	3
Tightening torque	0.4 Nm
Material Contact	CuSn
Material Contact surface	Ni/Au
Material Contact carrier	PA 6.6
Material Screw connection	Die-cast zinc, nickel-plated
Material Grip body	TPU, hardly inflammable, self-extinguishing
Material Seal	FKM
Flammability rating according to UL 94	V0
Degree of protection	IP65
	IP67
Ambient temperature (operation)	-25 °C ... 85 °C
Standard designation	M12 connector
Standards/regulations	IEC 61076-2-101

Connection 2

Dimensional drawing	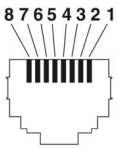 Connector pin assignment plug RJ45
Type	RJ45 Plug, straight
Signal type/category	Ethernet CAT5 (IEC 11801), 100 Mbps
Insertion/withdrawal cycles	≥ 750
Insulation resistance	≥ 100 MΩ
Overvoltage category	I
Degree of pollution	2
Material Contact	CuSn
Material Contact surface	Ni/Au
Material Contact carrier	PC
Material Housing	PA
Flammability rating according to UL 94	V2
Degree of protection	IP20

Ambient temperature (operation)	-25 °C ... 60 °C

Cable/line

Cable length	3 m

Ethernet flexible CAT5, 2-pair [93E]

Dimensional drawing	
Cable weight	42 kg/km
UL AWM Style	20963 (80°C/30 V)
Wiring standards/regulations	Electrical requirements EN 50288-2-2
Number of positions	4
Shielded	yes
Cable type	Ethernet flexible CAT5, 2-pair [93E]
Conductor structure	2x2xAWG26/7, SF/UTP
Signal runtime	5.3 ns/m
Conductor structure signal line	7x 0.16 mm
AWG signal line	26
Conductor cross section	2x 2x 0.14 mm²
Wire diameter incl. insulation	0.98 mm
External cable diameter	6.40 mm ±0.2 mm
Outer sheath, material	PUR
External sheath, color	water blue RAL 5021
Conductor material	Bare Cu litz wires
Material wire insulation	Foamed PE
Single wire, color	white/orange-orange, white/green-green
Thickness, outer sheath	1.20 mm
Twisted pairs	2 cores to the pair
Overall twist	Two pairs with two fillers to the core
Optical shield covering	70 %
Insulation resistance	≥ 500 MΩ*km
Coupling resistance	≤ 100.00 mΩ/m (at 10 MHz)
Loop resistance	≤ 290.00 Ω/km
Wave impedance	100 Ω ±5 Ω (at 100 MHz)
Cable capacity	approx. 45 nF/km (at 1 kHz)
Nominal voltage, cable	≤ 100 V (Peak value, not for high-power applications)
Test voltage Core/Core	700 V (50 Hz, 1 min.)
Test voltage Core/Shield	700.00 V (50 Hz, 1 min.)

Current carrying capacity of cable	2.00 A (according to DIN VDE 0891-1)
Minimum bending radius, fixed installation	4 x D
Minimum bending radius, flexible installation	8 x D
Smallest bending radius, fixed installation	26 mm
Smallest bending radius, movable installation	52 mm
Tensile strength	≤ 80 N
Near end crosstalk attenuation (NEXT)	65.3 dB (with 1 MHz)
	56.3 dB (at 4 MHz)
	50.3 dB (at 10 MHz)
	47.2 dB (at 16 MHz)
	45.8 dB (at 20 MHz)
	42.9 dB (at 31.25 MHz)
	38.4 dB (at 62.5 MHz)
	35.3 dB (at 100 MHz)
Power-summated near end crosstalk attenuation (PSNEXT)	62.3 dB (with 1 MHz)
	53.3 dB (at 4 MHz)
	47.3 dB (at 10 MHz)
	44.2 dB (at 16 MHz)
	42.8 dB (at 20 MHz)
	39.9 dB (at 31.25 MHz)
	35.4 dB (at 62.5 MHz)
	32.3 dB (at 100 MHz)
Return attenuation (RL)	23 dB (at 4 MHz)
	24.1 dB (at 8 MHz)
	25 dB (at 10 MHz)
	25 dB (at 16 MHz)
	25 dB (at 20 MHz)
	23.6 dB (at 31.25 MHz)
	21.5 dB (at 62.5 MHz)
	20.1 dB (at 100 MHz)
Shield attenuation	3.2 dB (with 1 MHz)
	6 dB (at 4 MHz)
	9.5 dB (at 10 MHz)
	12.1 dB (at 16 MHz)
	13.6 dB (at 20 MHz)
	17.1 dB (at 31.25 MHz)
	24.8 dB (at 62.5 MHz)
	32 dB (at 100 MHz)
Halogen-free	according to IEC 60754-1
Flame resistance	according to IEC 60332-1-2
	in acc. to UL VW1
	in accordance with UN ECE-R 118.03
Resistance to oil	in accordance with EN 60811-2-1
Ambient temperature (operation)	-40 °C ... 80 °C (cable, fixed installation)

	-20 °C ... 80 °C (Cable, flexible installation)
Ambient temperature (installation)	-20 °C ... 80 °C

Environmental and real-life conditions

Ambient conditions

Degree of protection	IP20 (RJ45 connector)
	IP67 (M12 connector)

Standards and regulations

M12

Standard designation	M12 connector
Standards/specifications	IEC 61076-2-101

Drawings

Schematic diagram

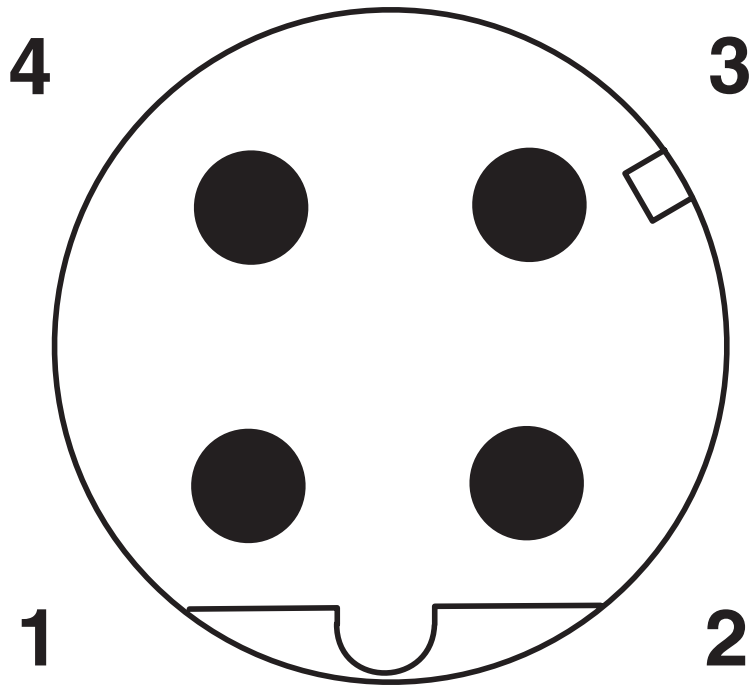

Pin assignment M12 male connector, 4-pos., D-coded, male side

Schematic diagram

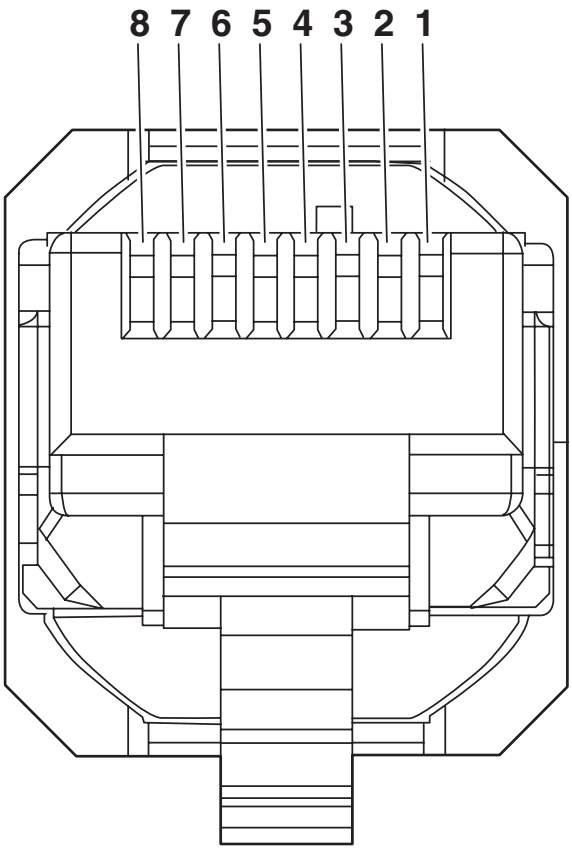

Connector pin assignment plug RJ45

Dimensional drawing

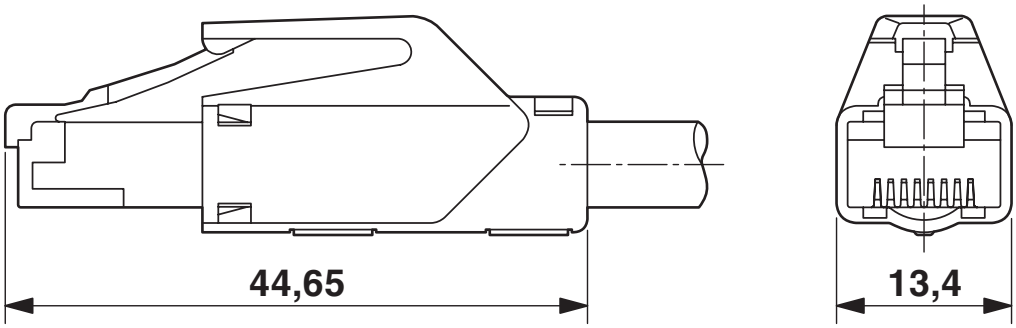

RJ45 connector, IP20

Circuit diagram

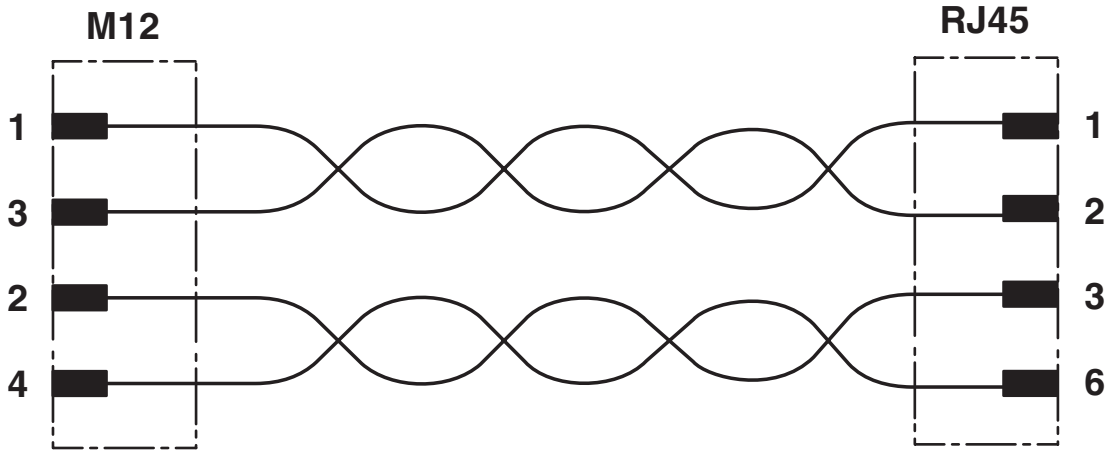

Dimensional drawing

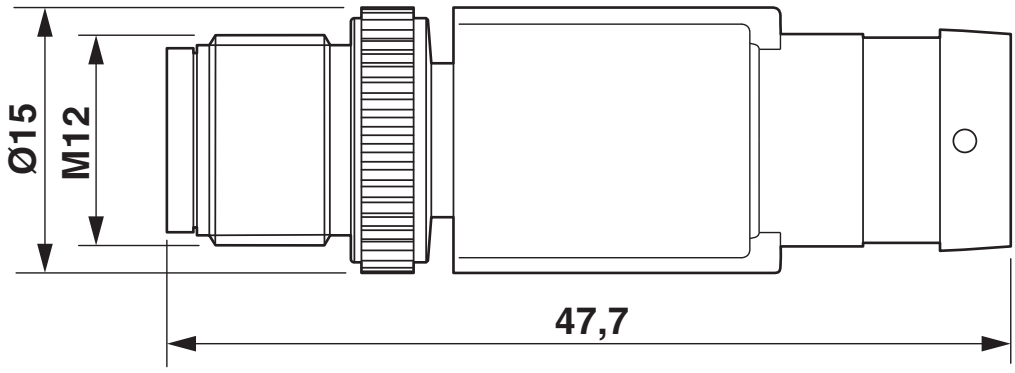

Plug, M12 x 1, straight, shielded

Approvals

To download certificates, visit the product detail page: https://www.phoenixcontact.com/us/products/1403499

cULus Listed
Approval ID: NBC-M12MSD Series

	Nominal voltage U_N	Nominal current I_N	Cross section AWG	Cross section mm^2
	30 V	4 A	-	-

Classifications

ECLASS

ECLASS-11.0	27060307
ECLASS-12.0	27060307
ECLASS-13.0	27060307

ETIM

ETIM 9.0	EC001855

UNSPSC

UNSPSC 21.0	26121600

Environmental product compliance

EU RoHS

Fulfills EU RoHS substance requirements	Yes, No exemptions

China RoHS

Environment friendly use period (EFUP)	EFUP-E
	No hazardous substances above the limits

EU REACH SVHC

REACH candidate substance (CAS No.)	No substance above 0.1 wt%

Accessories

NBC-M12MSD-R4AC/.../... - Network cable

1408712

https://www.phoenixcontact.com/us/products/1408712



Network cable, Ethernet CAT5 (100 Mbps), 4-position, PUR halogen-free, water blue RAL 5021, shielded (Advanced Shielding Technology), Plug straight M12, coding: D / IP67, on Plug straight RJ45 / IP20, cable length: Free input (0.2 ... 40.0 m)

NBC-M12MRD-R4AC/.../... - Network cable

1408704

https://www.phoenixcontact.com/us/products/1408704



Network cable, Ethernet CAT5 (100 Mbps), 4-position, PUR halogen-free, water blue RAL 5021, shielded, Plug angled M12 SPEEDCON, coding: D / IP67, on Plug straight RJ45 / IP20, cable length: Free input (0.2 ... 40.0 m)

NBC-M12FSD-R4AC/.../... - Network cable

1408696

https://www.phoenixcontact.com/us/products/1408696



Network cable, Ethernet CAT5 (100 Mbps), 4-position, PUR halogen-free, water blue RAL 5021, shielded (Advanced Shielding Technology), Socket straight M12, coding: D / IP67, on Plug straight RJ45 / IP20, cable length: Free input (0.2 ... 40.0 m)

NBC-M12FRD-R4AC/.../... - Network cable

1408689

https://www.phoenixcontact.com/us/products/1408689



Network cable, Ethernet CAT5 (100 Mbps), 4-position, PUR halogen-free, water blue RAL 5021, shielded, Socket angled M12 SPEEDCON, coding: D / IP67, on Plug straight RJ45 / IP20, cable length: Free input (0.2 ... 40.0 m)

PROT-M12 FS-PA-CHAIN - Sealing cap

1430873

https://www.phoenixcontact.com/us/products/1430873



M12 sealing cap made of plastic with fixing band, for sensor cables, for free M12 plugs

SAC-M12-EXCLIP-M - Locking clip

1558988

https://www.phoenixcontact.com/us/products/1558988



Locking clip for the pin side of sensor/actuator cables with M12 connector and M12 connectors for assembly, for knurl diameter: 15 mm or for Allen key with a wrench size of 14 mm, prevents the disconnection of plug-in connections without tools

TSD 04 SAC - Torque screwdriver

1208429

https://www.phoenixcontact.com/us/products/1208429



Torque screwdriver, with preset torque of 0.4 Nm and 4 mm hexagonal drive for M12 connectors

TSD-M 1,2NM - Torque screwdriver

1212224

https://www.phoenixcontact.com/us/products/1212224



Torque screw driver, accuracy as per EN ISO 6789 standard, adjustable from 0. 3 - 1.2 Nm

TSD-M SAC-BIT ADAPTER - Adapter insert

1212600

https://www.phoenixcontact.com/us/products/1212600



Adapter bit for TSD-M...torque tools, E6.3-1/4" drive with 4 mm hexagon to accommodate SAC bits

SAC BIT M12-D15 - Tool

1208432

https://www.phoenixcontact.com/us/products/1208432



Nut for assembling sensor/actuator cables with M12 connector and M12 connectors for assembly, with a knurl diameter of 15 mm, for 4 mm hexagonal drive

Phoenix Contact 2024 © - all rights reserved
https://www.phoenixcontact.com

Phoenix Contact USA
586 Fulling Mill Road
Middletown, PA 17057, United States
(+717) 944-1300
info@phoenixcon.com