HIRSCHMANN
A BELDEN BRAND



Product: CA 3 W LS

Circular Field Attachable Power Connector (CA Series): Male, angled, 4-pin(3+PE), integrated strain relief, 400 V AC/230 V DC, 16 A AC/10 A DC

Product Description

Circular Field Attachable Power Connector (CA Series): Male, angled, 4-pin(3+PE), integrated strain relief, 400 V AC/230 V DC, 16 A AC/10 A DC

Technical Drawing

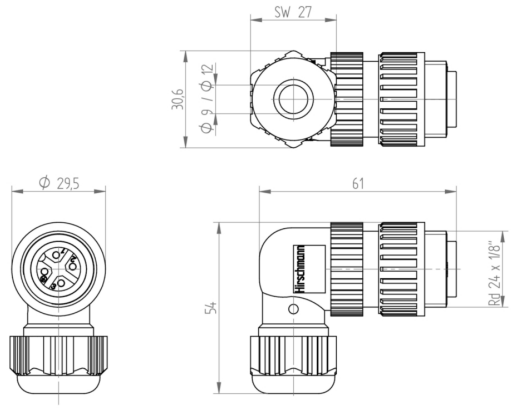

Technical Specifications

Technical Data

Product Family:	Power Connector
Product Sub Family:	CA-Series
Brand:	Hirschmann
Connector Type:	Field Attachable
Type of Contact / Gender:	male
Connector Design:	angled
Number of Pins:	4(3+PE)
Shielding:	Unshielded
Attachment Type:	Coupling Screw
Rated Voltage:	250 V DC / 400 V AC
Rated Impulse Voltage:	6.0 kV
Operating Voltage:	230 V DC, 400V AC
Rated Current*:	10 A DC, 16 A AC (1.5 mm²)
Contact Resistance:	≤ 10 mOhm
Type of Connection:	screw terminal
Cable Gland:	TR22
Conductor Cross Section:	0.5 mm² to 2.5 mm²
Strain-Relief:	clamping cage
Suitable Cables:	Ø6 mm to Ø12 mm, Gasket Ø9 mm for cables with Ø6 - 9 mm, Gasket Ø12 mm for cables with Ø9 - 12 mm
Ambient Temperature (Operation)*:	-40°C to +90°C, notice derating

Temperature Range (Gasket):	-40°C to +90°C
Protection Degree / IP Rating**:	IP66, IP67
Design Standard:	DIN EN 61984 (VDE 0627)
Pollution Degree:	3 acc. to DIN EN 60664-1 (VDE 0110-1)
Clearance / Creepage Distance:	DIN EN 60664-1 (2008/01); VDE 0110-1

Materials

Contact Base Material:	CuZn
Contact Plating:	Cu/Ag
Contact Bearer Material:	PA 66 GF
Contact Bearer Color:	black
Flammability Class (Contact Bearer):	UL 94 V-0
Attachment Material:	PA 66 GF
Flammability Class (Attachment):	UL 94 V-0
Gasket Material:	NBR

Additional Technical Data

Fastening Torque (Contact Screw):	M3: (25-30) Ncm
Fastening Torque (Cable Gland):	TR22: min. 250 Ncm
Mating Connectors / Fitting to:	934-125-100 CA 3 LD (field attachable, straight), 934-129-100 CA 3 W LD (field attachable, angled), 932-321-100 CA 3 GD (receptacle, straight)
Accessories to Order Separately:	831-530-400: CA00 SD 1, cap

Approvals

UL-File:	E95522, Series CA 3
VDE:	VDE-Reg.-Nr. 2745

Notes

Note Derating:	* Notice derating
Protection Degree / IP Rating Note:	** only if mounted and locked in combination with Hirschmann / Lumberg Automation connector.
Note:	Do not connect or disconnect under load.

Variants

Item #	Item Description	Housing Color	Housing Material	Cable Gland Material
934128100	CA 3 W LS	black	PA 66	PA 66

© 2024 Belden, Inc

All Rights Reserved.

Although Belden makes every reasonable effort to ensure their accuracy at the time of this publication, information and specifications described here in are subject to error or omission and to change without notice, and the listing of such information and specifications does not ensure product availability.

Belden provides the information and specifications herein on an "ASIS" basis, with no representations or warranties, whether express, statutory or implied. In no event will Belden be liable for any damages (including consequential, indirect, incidental, special, punitive, or exemplary damages) whatsoever, even if Belden has been advised of the possibility of such damages, whether in an action under contract, negligence or any other theory, arising out of or in connection with the use, or inability to use, the information or specifications described herein.

All sales of Belden products are subject to Belden's standard terms and conditions of sale.

Belden believes this product to be in compliance with all applicable environmental programs as listed in the data sheet. The information provided is correct to the best of Belden's knowledge, information and belief at the date of its publication. This information is designed only as a general guide for the safe handling, storage, and any other operation of the product itself or the one that it becomes a part of. The Product Disclosure is not to be considered a warranty or quality specification. Regulatory information is for guidance purposes only. Product users are responsible for determining the applicability of legislation and regulations based on their individual usage of the product.