Wirewound, Surface Mount Inductors



STANDARD ELECTRICAL SPECIFICATIONS

IND. (nH)	TOL.	TEST FREQ. (MHz) L	TEST FREQ. (MHz) Q	Q MIN.	SRF MIN. (MHz)	DCR MAX. (Ω)	RATED DC CURRENT (mA)
2.2	0.3 nH, 0.2 nH	250	1000	50	6000	0.06	800
2.7	0.3 nH, 0.2 nH	250	1000	35	6000	0.08	800
3.3	0.3 nH, 0.2 nH	250	1000	60	6000	0.08	800
3.9	0.3 nH, 0.2 nH	250	1000	60	6000	0.06	600
4.7	0.3 nH, 0.2 nH	250	1000	60	5800	0.06	600
5.6	5 %, 2 %	250	1000	60	5800	0.08	600
6.8	5 %, 2 %	250	1000	60	5500	0.06	600
8.2	5 %, 2 %	250	1000	60	5500	0.06	600
10	5 %, 2 %	250	500	60	4800	0.08	600
12	5 %, 2 %	250	500	60	4100	0.08	600
15	5 %, 2 %	250	500	60	3600	0.08	600
18	5 %, 2 %	250	500	60	3400	0.08	600
22	5 %, 2 %	250	500	60	3300	0.10	600
27	5 %, 2 %	250	500	60	2600	0.12	600
33	5 %, 2 %	250	500	60	2400	0.15	500
39	5 %, 2 %	250	500	60	2100	0.18	500
47	5 %, 2 %	200	500	60	1700	0.15	500
56	5 %, 2 %	200	500	60	1600	0.25	500
68	5 %, 2 %	200	500	60	1450	0.27	500
82	5 %, 2 %	150	500	60	1350	0.32	500
100	5 %, 2 %	150	500	60	1200	0.43	500
120	5 %, 2 %	150	250	50	1100	0.48	500
150	5 %, 2 %	100	250	50	950	0.56	400
180	5 %, 2 %	100	250	50	900	0.78	400
220	5 %, 2 %	100	250	50	860	1.00	400
270	5 %, 2 %	100	250	45	850	1.46	350
330	5 %, 2 %	100	250	45	800	1.65	300
390	5 %, 2 %	100	250	45	780	2.20	210
470	5 %	25.2	100	45	375	0.95	500
560	5 %	25.2	100	45	340	1.10	450
680	5 %	25.2	100	35	188	1.20	400
820	5 %	25.2	100	35	215	1.50	300
1000	5 %	25.2	50	35	200	2.13	180
1200	5 %	7.96	7.96	15	200	2.60	150
1500	5 %	7.96	7.96	15	200	2.90	130
1800	5 %	7.96	7.96	15	120	3.00	120
2200	5 %	7.96	7.96	15	110	3.10	110
2700	5 %	7.96	7.96	15	100	3.50	100
3300	5 %	7.96	7.96	15	70	2.30	210
3900	5 %	7.96	7.96	15	60	2.50	200
4700	5 %	7.96	7.96	15	50	2.80	180
5600	5 %	7.96	7.96	15	45	3.00	160
6800	5 %	7.96	7.96	15	45	3.20	130
8200	5 %	7.96	7.96	15	40	3.50	120
10 000	5 %	2.52	2.52	10	40	5.00	80

FEATURES

- High self-resonant frequency values
- High Q values at higher frequencies
- Wirewound construction
- Compatible with vapor phase and infrared reflow soldering
- Tape and reel packaging for automatic handling, 2000/reel
- Compliant to RoHS Directive 2002/95/EC
- Halogen-free according to IEC 61249-2-21 definition

Pb-free
RoHS COMPLIANT
HALOGEN FREE

ELECTRICAL SPECIFICATIONS

Inductance Range: 2.2 nH to 10 000 nH

Inductance and Tolerance: 0.3 nH for 2.2 nH to 4.7 nH, ± 5 % for 5.6 nH to 10 000 nH

Operating Temperature: - 40 °C to + 125 °C

Core Material: Ceramic from 2.2 nH to 390 nH; Ferrite from 470 nH to 10 000 nH

TEST EQUIPMENT

- Inductance and Q measured on HP4286A (2.2 nH to 390 nH) and HP4285A (470 nH to 10 000 nH)
- SRF is measured on HP8753E
- DCR ismeasured on HP4338B

DIMENSIONS in inches [millimeters]

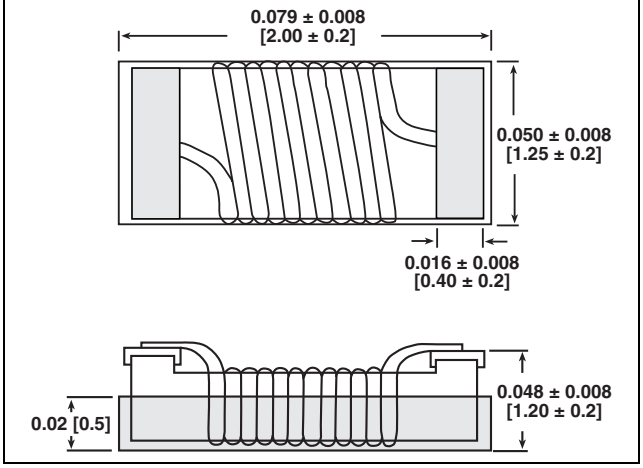

DESCRIPTION

IMC-0805-01	10 nH	± 5 %	ER	e4 (1)
MODEL	INDUCTANCE VALUE	INDUCTANCE TOLERANCE	PACKAGE CODE	JEDEC LEAD (Pb)-FREE STANDARD

Note

(1) For parts within 2.2 nH to 390 nH please use e4 for JEDEC lead (Pb)-free standard. For parts within 470 nH to 10 000 nH please use e3 for JEDEC lead (Pb)-free standard.

GLOBAL PART NUMBER

I	M	C	0	8	0	5	E	R	1	0	N	J	0	1
PRODUCT FAMILY			SIZE				PACKAGE CODE		INDUCTANCE VALUE			TOL.	SERIES	

PERFORMANCE GRAPHS (IMC-0805-01)

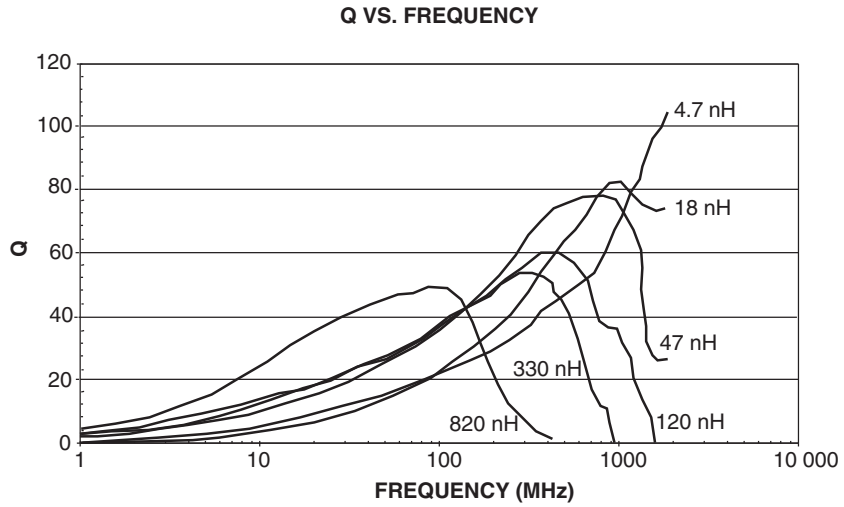

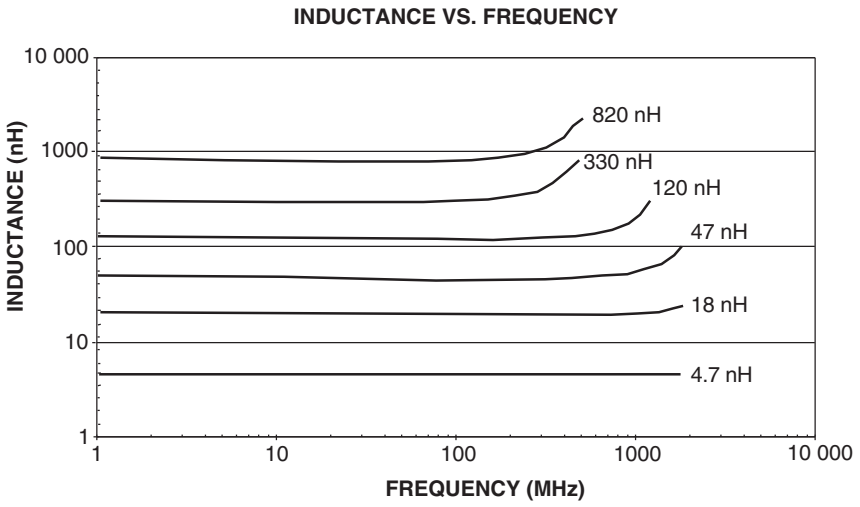

TAPE AND REEL SPECIFICATIONS in inches [millimeters]

REEL DIMENSIONS

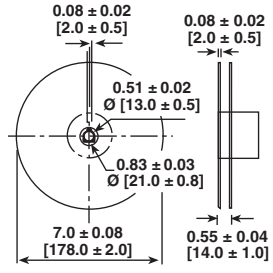

TAPE DIMENSIONS

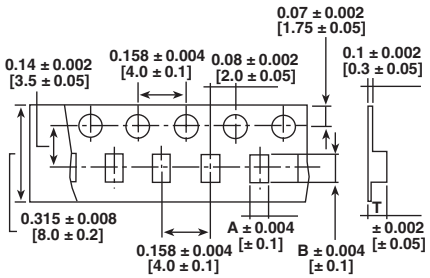

RECOMMENDED PATTERN

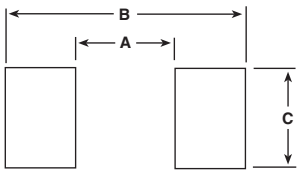

MODEL	UNITS PER REEL
IMC-0805-01	2000

MODEL	A	B	T
IMC-0805-01	0.055 [1.4]	0.091 [2.3]	0.055 [1.4]

MODEL	A	B	C
IMC-0805-01	0.047 [1.20]	0.102 [2.6]	0.047 [1.20]

Disclaimer

ALL PRODUCT, PRODUCT SPECIFICATIONS AND DATA ARE SUBJECT TO CHANGE WITHOUT NOTICE TO IMPROVE RELIABILITY, FUNCTION OR DESIGN OR OTHERWISE.

Vishay Intertechnology, Inc., its affiliates, agents, and employees, and all persons acting on its or their behalf (collectively, “Vishay”), disclaim any and all liability for any errors, inaccuracies or incompleteness contained in any datasheet or in any other disclosure relating to any product.

Vishay makes no warranty, representation or guarantee regarding the suitability of the products for any particular purpose or the continuing production of any product. To the maximum extent permitted by applicable law, Vishay disclaims (i) any and all liability arising out of the application or use of any product, (ii) any and all liability, including without limitation special, consequential or incidental damages, and (iii) any and all implied warranties, including warranties of fitness for particular purpose, non-infringement and merchantability.

Statements regarding the suitability of products for certain types of applications are based on Vishay's knowledge of typical requirements that are often placed on Vishay products in generic applications. Such statements are not binding statements about the suitability of products for a particular application. It is the customer's responsibility to validate that a particular product with the properties described in the product specification is suitable for use in a particular application. Parameters provided in datasheets and / or specifications may vary in different applications and performance may vary over time. All operating parameters, including typical parameters, must be validated for each customer application by the customer's technical experts. Product specifications do not expand or otherwise modify Vishay's terms and conditions of purchase, including but not limited to the warranty expressed therein.

Hyperlinks included in this datasheet may direct users to third-party websites. These links are provided as a convenience and for informational purposes only. Inclusion of these hyperlinks does not constitute an endorsement or an approval by Vishay of any of the products, services or opinions of the corporation, organization or individual associated with the third-party website. Vishay disclaims any and all liability and bears no responsibility for the accuracy, legality or content of the third-party website or for that of subsequent links.

Except as expressly indicated in writing, Vishay products are not designed for use in medical, life-saving, or life-sustaining applications or for any other application in which the failure of the Vishay product could result in personal injury or death. Customers using or selling Vishay products not expressly indicated for use in such applications do so at their own risk. Please contact authorized Vishay personnel to obtain written terms and conditions regarding products designed for such applications.

No license, express or implied, by estoppel or otherwise, to any intellectual property rights is granted by this document or by any conduct of Vishay. Product names and markings noted herein may be trademarks of their respective owners.

© 2024 VISHAY INTERTECHNOLOGY, INC. ALL RIGHTS RESERVED