1-1903390-2 ✔ ACTIVE

GRACE INERTIA 2.5

TE Internal #: 1-1903390-2

Rectangular Connector Housings, Wire-to-Wire, 4 Position, .098 in [2.5 mm] Centerline, 1 Row, PBT GF, Plug, Socket, Wire & Cable, GRACE INERTIA 2.5

View on TE.com >

Connectors > Rectangular Connectors > Rectangular Connector Housings > STD Temp Sig GRACE INERTIA Plug

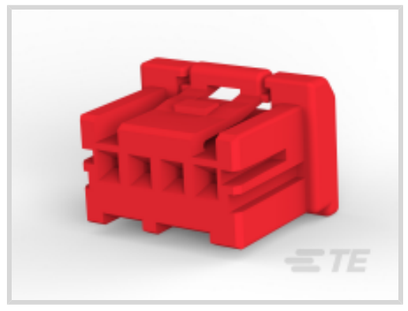






Connector System: **Wire-to-Wire**

Number of Positions: **4**

Centerline (Pitch): **2.5 mm [.098 in]**

Number of Rows: **1**

Housing Material: **PBT GF**

All STD Temp Sig GRACE INERTIA Plug (63)

Features

Product Type Features

Connector System	Wire-to-Wire
Connector & Housing Type	Plug
Sealable	No
Connector & Contact Terminates To	Wire & Cable

Configuration Features

Number of Cavities	4
Number of Positions	4
Number of Rows	1

Electrical Characteristics

Operating Voltage	250 VAC

Contact Features

Contact Layout	Inline

Contact Type	Socket

Mechanical Attachment

Connector Mounting Type	Cable Mount (Free-Hanging)

Housing Features

Housing Color	Red
Centerline (Pitch)	2.5 mm[.098 in]
Housing Material	PBT GF

Dimensions

Connector Height	11 mm[.433 in]
Product Width	9.6 mm[.378 in]
Product Length	13.7 mm[.539 in]

Usage Conditions

Operating Temperature Range	-30 - 105 °C[-22 - 221 °F]

Operation/Application

Circuit Application	Signal

Identification Marking

Circuit Identification Feature	Without

Industry Standards

Glow Wire Rating	Standard Part - Not Glow Wire

Packaging Features

Packaging Quantity	1000
Packaging Method	Bag

Product Compliance

For compliance documentation, visit the product page on TE.com>

EU RoHS Directive 2011/65/EU	Compliant
EU ELV Directive 2000/53/EC	Compliant
China RoHS 2 Directive MIIT Order No 32, 2016	No Restricted Materials Above Threshold
EU REACH Regulation (EC) No. 1907/2006	Current ECHA Candidate List: JAN 2024 (240) Candidate List Declared Against: JAN 2024 (240) Does not contain REACH SVHC

Halogen Content	Not Low Halogen - contains Br or Cl > 900 ppm.
Solder Process Capability	Not applicable for solder process capability

Product Compliance Disclaimer

This information is provided based on reasonable inquiry of our suppliers and represents our current actual knowledge based on the information they provided. This information is subject to change. The part numbers that TE has identified as EU RoHS compliant have a maximum concentration of 0.1% by weight in homogenous materials for lead, hexavalent chromium, mercury, PBB, PBDE, DBP, BBP, DEHP, DIBP, and 0.01% for cadmium, or qualify for an exemption to these limits as defined in the Annexes of Directive 2011/65/EU (RoHS2). Finished electrical and electronic equipment products will be CE marked as required by Directive 2011/65/EU. Components may not be CE marked. Additionally, the part numbers that TE has identified as EU ELV compliant have a maximum concentration of 0.1% by weight in homogenous materials for lead, hexavalent chromium, and mercury, and 0.01% for cadmium, or qualify for an exemption to these limits as defined in the Annexes of Directive 2000/53/EC (ELV). Regarding the REACH Regulation, the information TE provides on SVHC in articles for this part number is based on the latest European Chemicals Agency (ECHA) 'Guidance on requirements for substances in articles' posted at this URL: https://echa.europa.eu/guidance-documents/guidance-on-reach

Compatible Parts

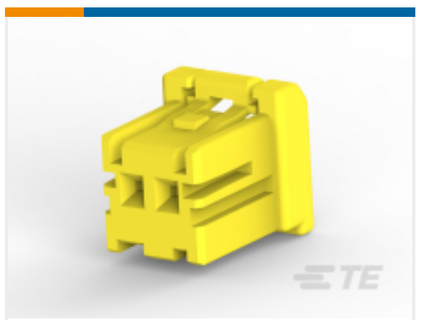

TE Part # CAT-G7534A-P729
STD Temp Sig GRACE INERTIA Plug

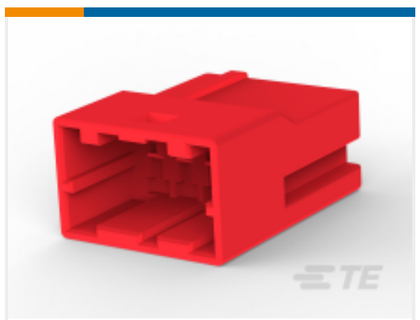

TE Part # 1-1903393-2
GIC 2.5 W CAP HSG 4P RED

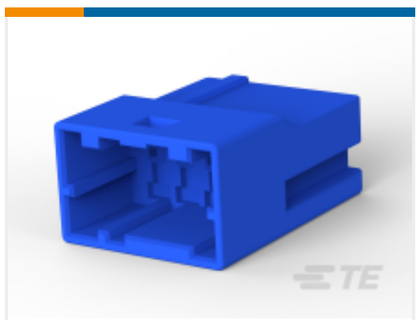

TE Part # 2-1903393-3
GIC 2.5 W CAP HSG 4P BLUE

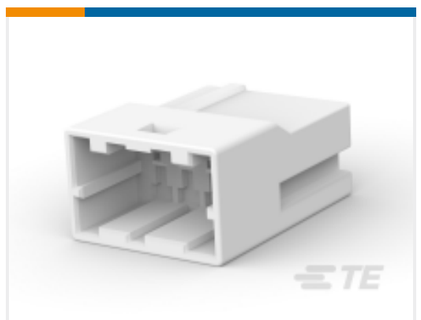

TE Part # 1903393-1
GIC 2.5 W CAP HSG 4P NATURAL

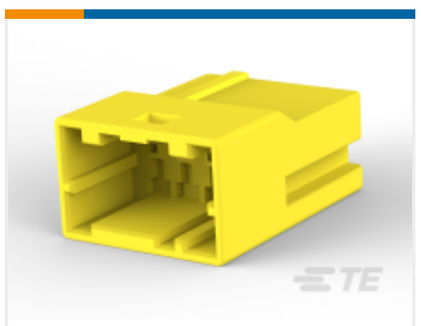

TE Part # 3-1903393-4
GIC 2.5 W CAP HSG 4P YELLOW

Also in the Series | GRACE INERTIA 2.5



Connector Contacts(6)



Connector Hardware(7)

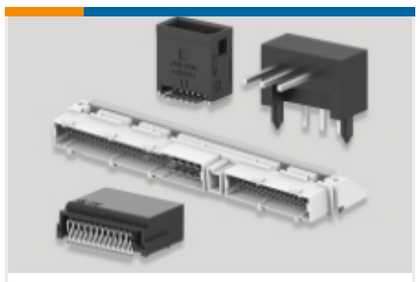

PCB Headers & Receptacles(138)



Rectangular Connector Housings(49)



Rectangular Power Connectors(35)



Wire-to-Board Connector Assemblies & Housings(46)

Customers Also Bought

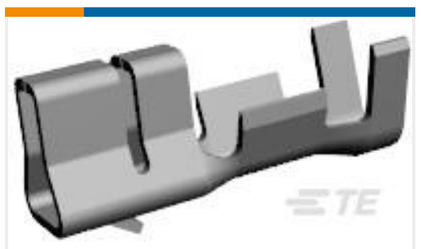

TE Part # 917684-1
2.5 SIGNAL DBL LOCK REC CONT M



TE Part # 172211-4
EIS CAP HSG FREE HANG 4P NATUTURAL



TE Part # 171826-4
POST HEADER ASSY HORIZONTAL EI



TE Part # 171826-6
POST HEADER ASSY HORIZ EI



TE Part # 171826-5
POST HDR ASSY HDR AMP EI CONN



TE Part # 350824-4
02P UMNL HDR ASSY PC LF



TE Part # 794219-1
MINI UMNL2 SOK 26-22 AWG SN



TE Part # 794714-1
06P UMNL CAP HSG NATL,PAN MNT



TE Part # 1969590-4
HSG, REC, PANEL MOUNT, SINGLE ROW,EP2.5



TE Part # 1-171826-0
EI.SRS.POST HDR.ASS

Documents

Product Drawings

GIC 2.5 W PLUG HSG 4P RED

English

CAD Files

3D PDF

3D

Customer View Model

ENG_CVM_CVM_1-1903390-2_F_c-1-1903390-2-f.2d_dxf.zip

English

Customer View Model

ENG_CVM_CVM_1-1903390-2_F_c-1-1903390-2-f.3d_igs.zip

English

Customer View Model

ENG_CVM_CVM_1-1903390-2_F_c-1-1903390-2-f.3d_stp.zip

English

By downloading the CAD file I accept and agree to the Terms and Conditionsof use.

Product Specifications

Application Specification

English