SIEMENS

Data sheet 3VA5290-6EC31-0AA0



circuit breaker 3VA5 UL frame 250 breaking capacity class H 65kA @ 480V 3-pole, line protection TM230, FTAM, In=90A overload protection Ir=90A fixed short-circuit protection Ii=5...10 x In without connection

Model	
product brand name	SENTRON
product designation	Molded-case circuit breaker
product designation / according to UL file	HFAS
design of the product	System protection
design of the load switch / according to UL 489 / Heating, Air Conditioning, and Refrigeration circuit breaker (HACR Type)	Yes
design of the load switch / according to UL 489 / High-Intensity-Discharge circuit breaker (HID Type)	No
design of the load switch / according to UL 489 / Switching Duty circuit breaker (SWD Type)	No
design of the overcurrent release	TM230
protection function of the overcurrent release	LI
number of poles	3
General technical data	
insulation voltage / rated value	800 V
operating voltage / at DC / rated value	750 V
operating voltage / at AC / rated value	690 V
power loss [W] / maximum	25 W
power loss [W] / for rated value of the current / at AC / in hot operating state / per pole	8.2 W
mechanical service life (operating cycles) / typical	20 000
electrical endurance (operating cycles) / at AC-1 / at 380/415 V	8 000
electrical endurance (operating cycles) / at AC-1 / at 690 V	4 000
electrical endurance (operating cycles) / at 480 V	8 000
electrical endurance (operating cycles) / at 600 V	4 000
product feature / for neutral conductors / upgradable/retrofittable / short-circuit and overload proof	No
ground-fault monitoring version	without
product function	
● communication function	No
● other measurement function	No
Net Weight	2 kg
Current	
marking / according to UL 489 / 100%-rated breaker	No
operational current	
● at 40 °C	90 A
● at 45 °C	90 A
● at 50 °C	90 A
● at 55 °C	87.3 A
● at 60 °C	85.5 A
● at 65 °C	82.8 A

Subject to change without notice
© Copyright Siemens

● at 70 °C	79.2 A
Switching capacity according to IEC 60947	
switching capacity class of the circuit breaker	H
maximum short-circuit current breaking capacity (Icu)	
● at 240 V	100 kA
● at 415 V	70 kA
● at 690 V	10 kA
operating short-circuit current breaking capacity (Ics)	
● at 240 V	100 kA
● at 415 V	70 kA
● at 690 V	10 kA
short-circuit current making capacity (Icm)	
● at 240 V	220 kA
● at 415 V	154 kA
● at 690 V	17 kA
design of short-circuit protection	For switching power values in DC networks, see the 3VA molded case circuit breaker device manual; link to be found under Service & Support in the last chapter
Switching capacity according to UL 489	
current breaking capacity	
● at 240 V	100 kA
● at 480 V	65 kA
● at 600 V	25 kA
Adjustable parameters	
adjustable response value setting current (Ir) / of the L-trip / with I2t characteristic	
● minimum	90 A
● maximum	90 A
adjustable response value delay time (tr) / for L-tripping / with I2t characteristic	
● minimum	1 s
● maximum	1 s
adjustable response value setting current (Ii) / for I-tripping	
● minimum	450 A
● maximum	900 A
adjustable absolute value setting current (InN) / for N-tripping	
● minimum	0 A
● maximum	0 A
adjustable current response value current / of the current-dependent overload release	90 ... 90 A
product function / grounding protection	No
Mechanical Design	
product component	
● undervoltage release	No
● voltage trigger	No
● trip indicator	No
height [in]	7.28 in
height	185 mm
width [in]	4.13 in
width	105 mm
depth [in]	3.27 in
depth	83 mm
Connections	
arrangement of electrical connectors / for main current circuit	Without connection
type of electrical connection / for main current circuit	Without
Auxiliary circuit	
number of CO contacts / for auxiliary contacts	0
Accessories	
product extension / optional / motor drive	Yes
Environmental conditions	
protection class IP / on the front	IP40
ambient temperature	

Subject to change without notice
© Copyright Siemens

● during operation / minimum	-25 °C
● during operation / maximum	70 °C
● during storage / minimum	-40 °C
● during storage / maximum	80 °C

Certificates

reference code / according to IEC 81346-2	Q

General Product Approval

Confirmation







Miscellaneous



EMC	Declaration of Conformity	Marine / Shipping	other









Confirmation

Miscellaneous

other

Miscellaneous

Further information

Siemens has decided to exit the Russian market (see here).
https://press.siemens.com/global/en/pressrelease/siemens-wind-down-russian-business
Siemens is working on the renewal of the current EAC certificates.
Please contact your local Siemens office on the status of validity of the EAC certification if you intend to import or offer to supply these products to an EAC relevant market (other than the sanctioned EAEU member states Russia or Belarus).
Information on the packaging
https://support.industry.siemens.com/cs/ww/en/view/109813875
Information- and Downloadcenter (Catalogs, Brochures,…)
http://www.siemens.com/lowvoltage/catalogs
Industry Mall (Online ordering system)
https://mall.industry.siemens.com/mall/en/en/Catalog/product?mlfb=3VA5290-6EC31-0AA0
Service&Support (Manuals, Certificates, Characteristics, FAQs,...)
https://support.industry.siemens.com/cs/ww/en/ps/3VA5290-6EC31-0AA0
Image database (product images, 2D dimension drawings, 3D models, device circuit diagrams, ...)
http://www.automation.siemens.com/bilddb/cax_en.aspx?mlfb=3VA5290-6EC31-0AA0
CAx-Online-Generator
http://www.siemens.com/cax
Tender specifications
http://www.siemens.com/specifications

Subject to change without notice
© Copyright Siemens

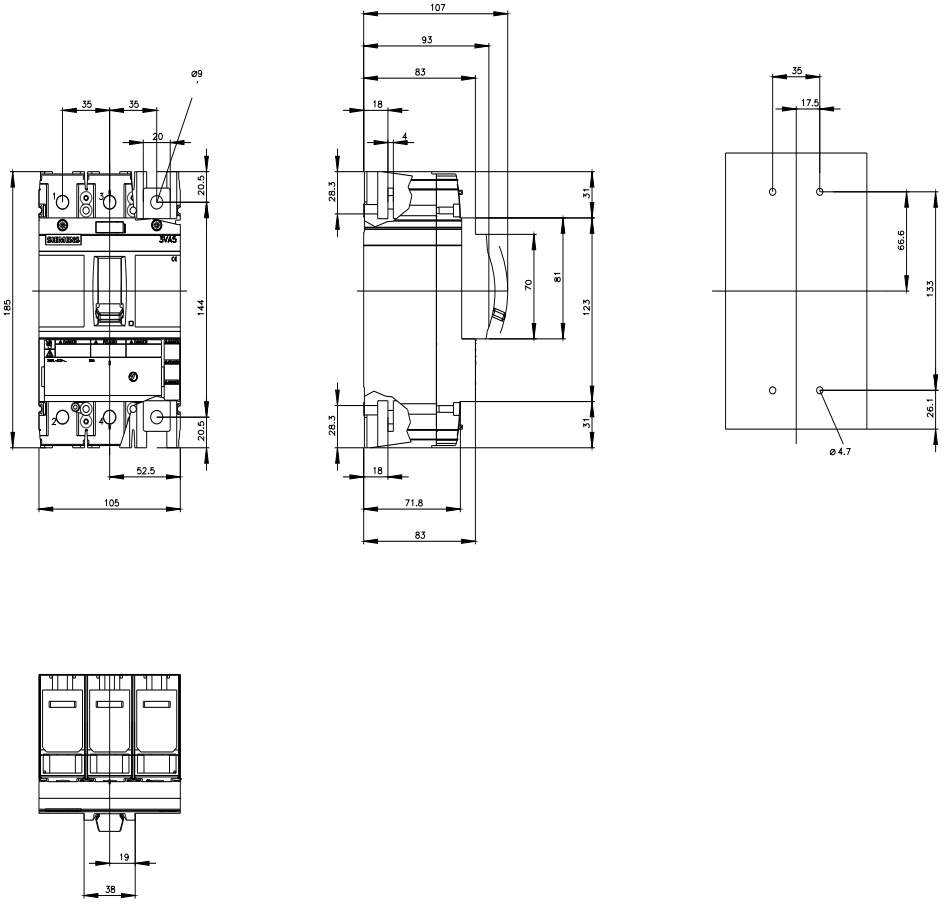

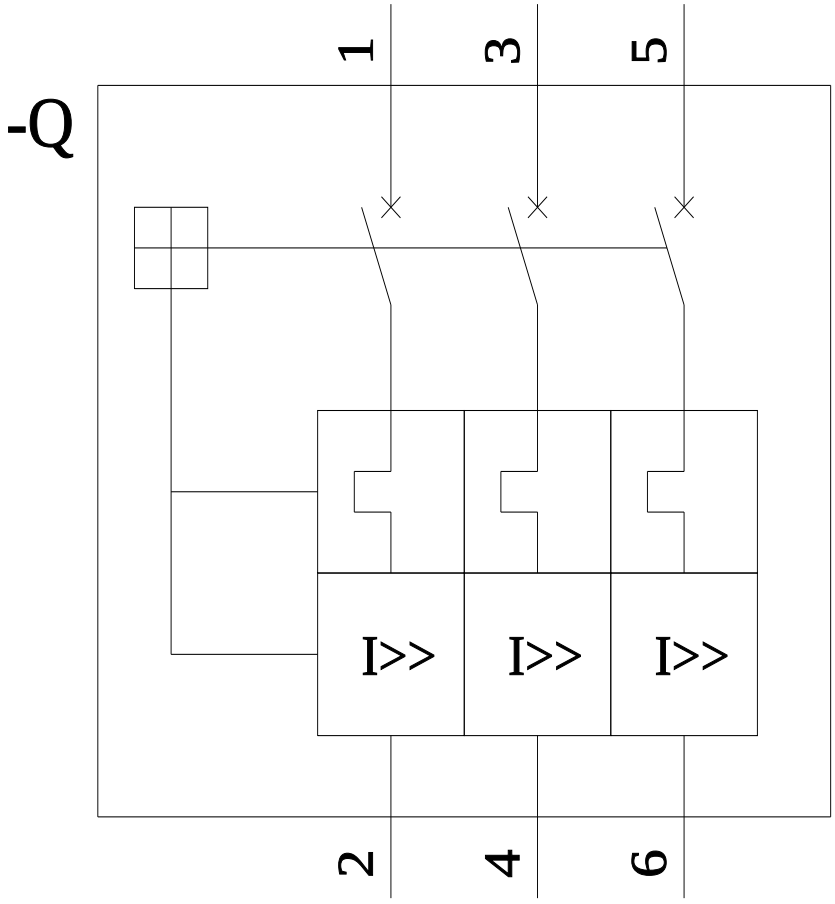

Subject to change without notice
© Copyright Siemens

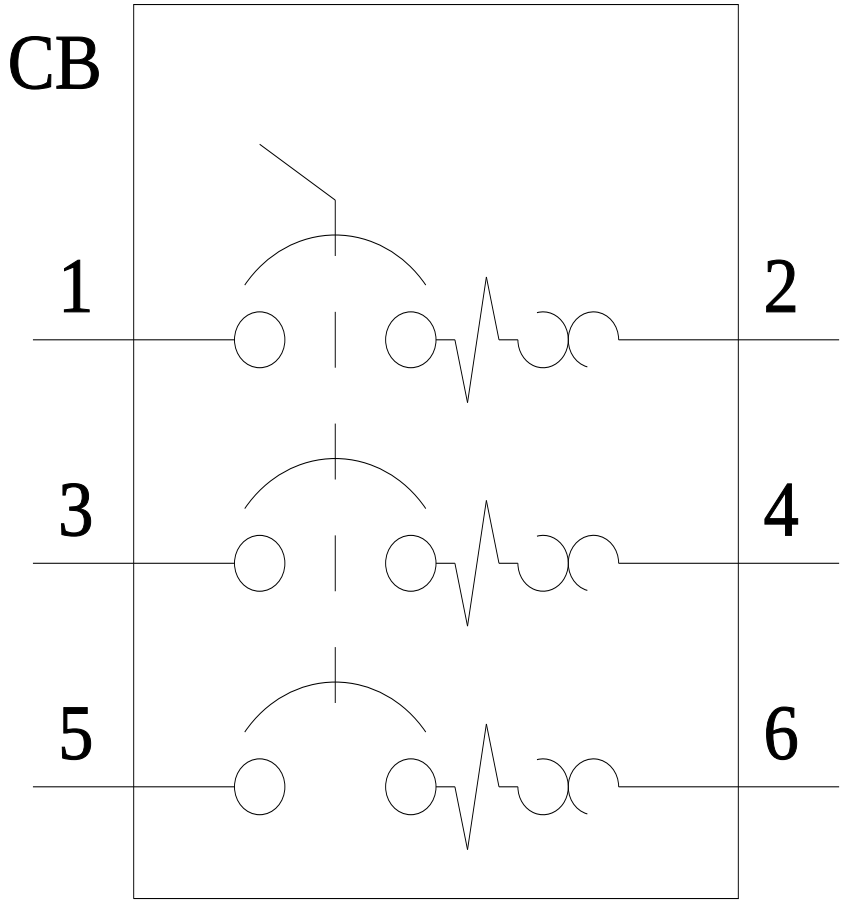

last modified: 7/15/2022

Subject to change without notice
© Copyright Siemens

Subject to change without notice
© Copyright Siemens