MSTB 2,5/ 7-STF-5,08 EX - PCB connector

1795608

https://www.phoenixcontact.com/us/products/1795608

Please be informed that the data shown in this PDF document is generated from our online catalog. Please find the complete data in the user documentation. Our general terms of use for downloads are valid.

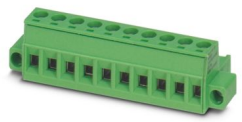

PCB connector, nominal cross section: 2.5 mm^2, color: green, nominal current: 12 A, contact surface: Tin, contact connection type: Socket, number of potentials: 7, number of rows: 1, number of positions: 7, number of connections: 7, product range: MSTB 2,5/..-STF-EX, pitch: 5.08 mm, connection method: Screw connection with tension sleeve, screw head form: L Slotted, conductor/PCB connection direction: 0 °, locking clip: - without locking clip, plug-in system: COMBICON MSTB 2,5 EX, locking: Screw locking mechanism, mounting: Screw flange, type of packaging: packed in cardboard

Your advantages

- Well-known connection principle allows worldwide use
- Low temperature rise, thanks to maximum contact force
- Screwable flange for superior mechanical stability
- Satisfies the more stringent safety requirements of “Ex eb” protection according to IEC 60079-7 for potentially explosive areas
- Allows connection of two conductors

Commercial data

Item number	1795608
Packing unit	50 pc
Minimum order quantity	50 pc
Note	Made to order (non-returnable)
Sales key	AA03
Product key	AACAGQ
Catalog page	Page 369 (C-1-2013)
GTIN	4046356635806
Weight per piece (including packing)	13.72 g
Weight per piece (excluding packing)	13.2 g
Customs tariff number	85366990
Country of origin	DE

Technical data

Product properties

Product type	PCB connector
Product family	MSTB 2,5/..-STF-EX
Product line	COMBICON Connectors M
Type	Standard
Number of positions	7
Pitch	5.08 mm
Number of connections	7
Number of rows	1
Number of potentials	7
Mounting flange	Screw flange

Electrical properties

Nominal current I_N	12 A
Nominal voltage U_N	176 V
Rated current / conductor cross section	12 A/2.5 mm²

Ex data

Ex approval

Identification	0344 Ex II 2GD / Ex eb IIC Gb
EU-type examination certificate	KEMA 10ATEX0196 U
IECEx certificate	IECEx KEM 10.0093U

Connection data

Connection technology

Type	Standard
Connector system	COMBICON MSTB 2,5 EX
Nominal cross section	2.5 mm²
Contact connection type	Socket

Interlock

Locking type	Screw locking mechanism
Mounting flange	Screw flange
Tightening torque	0.3 Nm

Conductor connection

Connection method	Screw connection with tension sleeve
Conductor/PCB connection direction	0 °
Conductor cross section rigid	0.2 mm² ... 2.5 mm²
Conductor cross section flexible	0.2 mm² ... 2.5 mm²
Conductor cross section AWG	24 ... 12

Conductor cross section flexible, with ferrule without plastic sleeve	0.25 mm² ... 2.5 mm²
Conductor cross section, flexible, with ferrule, with plastic sleeve	0.25 mm² ... 2.5 mm²
2 conductors with same cross section, solid	0.2 mm² ... 1 mm²
2 conductors with same cross section, flexible	0.2 mm² ... 1.5 mm²
2 conductors with same cross section, flexible, with ferrule without plastic sleeve	0.25 mm² ... 1 mm²
2 conductors with the same cross section, flexible, with TWIN ferrule with plastic sleeve	0.5 mm² ... 1.5 mm²
Cylindrical gauge a x b / diameter	2.8 mm x 2.0 mm / 2.4 mm
Stripping length	7 mm
Drive form screw head	Slotted (L)
Tightening torque	0.5 Nm ... 0.6 Nm

Specifications for ferrules without insulating collar

recommended crimping tool	1212034 CRIMPFOX 6

Specifications for ferrules with insulating collar

recommended crimping tool	1212034 CRIMPFOX 6

Material specifications

Material data - contact

Note	WEEE/RoHS-compliant, free of whiskers according to IEC 60068-2-82/JEDEC JESD 201
Contact material	Cu alloy
Surface characteristics	hot-dip tin-plated
Metal surface terminal point (top layer)	Tin (5 - 7 µm Sn)
Metal surface contact area (top layer)	Tin (5 - 7 µm Sn)

Material data - housing

Color (Housing)	green (6021)
Insulating material	PA
Insulating material group	I
CTI according to IEC 60112	600
Flammability rating according to UL 94	V0
Glow wire flammability index GWFI according to EN 60695-2-12	850
Glow wire ignition temperature GWIT according to EN 60695-2-13	775
Temperature for the ball pressure test according to EN 60695-10-2	125 °C

Dimensions

Dimensional drawing	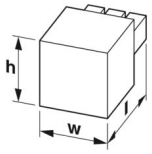
Pitch	5.08 mm
Width [w]	45.57 mm
Height [h]	15 mm
Length [l]	18.3 mm

Mounting

Tightening torque	0.3 Nm

Notes

Notes on operation	In accordance with IEC 61984, COMBICON connectors have no switching power (COC). During designated use, they must not be plugged in or disconnected when carrying voltage or under load.

Packaging specifications

Type of packaging	packed in cardboard

Drawings

Dimensional drawing

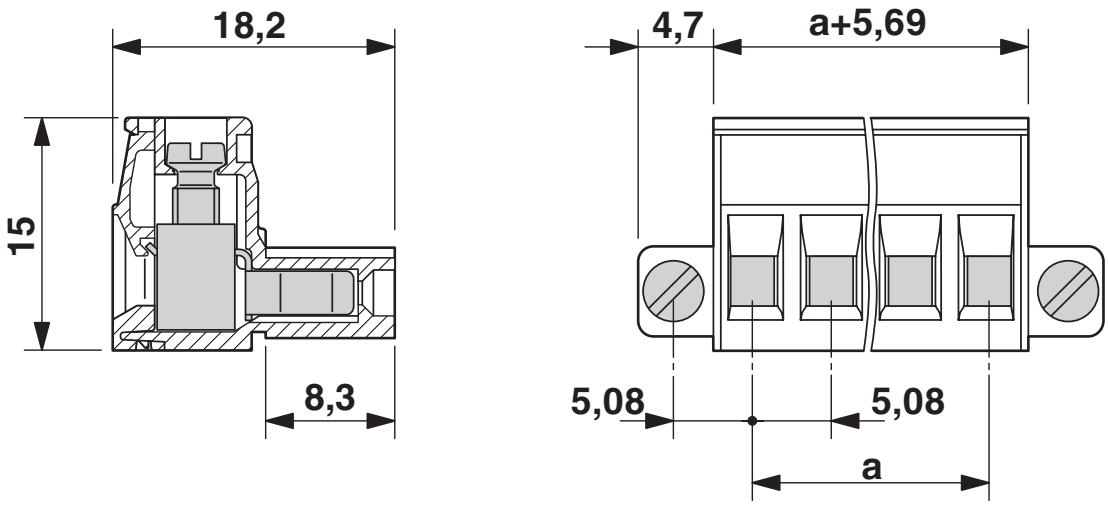

Approvals

To download certificates, visit the product detail page: https://www.phoenixcontact.com/us/products/1795608

ATEX
Approval ID: KEMA 10ATEX0196 U

	Nominal voltage U_N	Nominal current I_N	Cross section AWG	Cross section mm^2
	176 V	12 A	-	0.2 - 2.5

IECEx
Approval ID: IECEx KEM 10.0093U

	Nominal voltage U_N	Nominal current I_N	Cross section AWG	Cross section mm^2
	176 V	12 A	-	0.2 - 2.5

EAC Ex
Approval ID: B.00065/19

CCC
Approval ID: 2021122313114375

Classifications

ECLASS

ECLASS-11.0	27460202
ECLASS-12.0	27460202
ECLASS-13.0	27460202

ETIM

ETIM 9.0	EC002638

UNSPSC

UNSPSC 21.0	39121400

Environmental product compliance

EU RoHS

Fulfills EU RoHS substance requirements	Yes, No exemptions

China RoHS

Environment friendly use period (EFUP)	EFUP-E
	No hazardous substances above the limits

EU REACH SVHC

REACH candidate substance (CAS No.)	No substance above 0.1 wt%

Accessories

CP-MSTB - Coding profile

1734634

https://www.phoenixcontact.com/us/products/1734634

Coding profile, is inserted into the slot on the plug or inverted header, red insulating material



MPS-MT - Test plug

0201744

https://www.phoenixcontact.com/us/products/0201744

Test plug, with solder connection up to 1 mm^2 conductor cross section, number of positions: 1, color: gray



RPS - Reducing plug

0201647

https://www.phoenixcontact.com/us/products/0201647



Reducing plug, number of positions: 1, color: gray

SZS 0,6X3,5 - Screwdriver

1205053

https://www.phoenixcontact.com/us/products/1205053



Actuation tool, for ST terminal blocks, insulated, also suitable for use as a bladed screwdriver, size: 0.6 x 3.5 x 100 mm, 2-component grip, with non-slip grip

SK 5,08/3,8:FORTL.ZAHLEN - Marker card

0804293

https://www.phoenixcontact.com/us/products/0804293

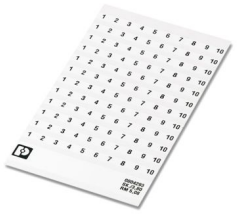

Marker card, white, labeled, horizontal: consecutive numbers 1 ... 10, 11 ... 20, etc. up to 91 ... (99)100, mounting type: adhesive, for terminal block width: 5.08 mm, lettering field size: 5.08 x 3.8 mm

SK 5,08/3,8:UNBEDRUCKT - Marker card

0805412

https://www.phoenixcontact.com/us/products/0805412



Marker card, Sheet, white, unlabeled, can be labeled with: Marker pen: without print, mounting type: adhesive, for terminal block width: 5.08 mm, lettering field size: 5.08 x 3.8 mm, Number of individual labels: 120

B-STIFT - Marker pen

1051993

https://www.phoenixcontact.com/us/products/1051993



Marker pen, for manual labeling of unprinted Zack strips, smear-proof and waterproof, line thickness 0.5 mm

MSTB 2,5/ 7-GF-5,08 EX - PCB header

1795718

https://www.phoenixcontact.com/us/products/1795718



PCB headers, nominal cross section: 2.5 mm^2, color: green, nominal current: 12 A, contact surface: Tin, contact connection type: Pin, number of potentials: 7, number of rows: 1, number of positions: 7, number of connections: 7, product range: MSTB 2,5/..-GF-EX, pitch: 5.08 mm, mounting: Wave soldering, pin layout: Linear pinning, solder pin [P]: 3.23 mm, number of solder pins per potential: 1, plug-in system: COMBICON MSTB 2,5 EX, Pin connector pattern alignment: Standard, locking: Screw locking mechanism, mounting: Threaded flange, type of packaging: packed in cardboard

MSTB 2,5/ 7-STF-5,08 EX - PCB connector

1795608

https://www.phoenixcontact.com/us/products/1795608

MSTBV 2,5/ 7-GF-5,08 EX - PCB header

1796377

https://www.phoenixcontact.com/us/products/1796377

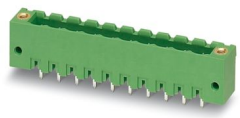

PCB headers, nominal cross section: 2.5 mm^2, color: green, nominal current: 12 A, contact surface: Tin, contact connection type: Pin, number of rows: 1, number of positions: 7, product range: MSTBV 2,5/..-GF-EX, pitch: 5.08 mm, mounting: Wave soldering, pin layout: Linear pinning, solder pin [P]: 3.9 mm, number of solder pins per potential: 1, plug-in system: COMBICON MSTB 2,5, Pin connector pattern alignment: Standard, locking: Screw locking mechanism, mounting: Threaded flange, type of packaging: packed in cardboard

Phoenix Contact 2024 © - all rights reserved
https://www.phoenixcontact.com

Phoenix Contact USA
586 Fulling Mill Road
Middletown, PA 17057, United States
(+717) 944-1300
info@phoenixcon.com