MM	IN
.25	.010
6.35	.250
10.66	.420
15.74	.620
18.28	.720
22.60	.890
28.44	1.120
32.51	1.280

SEQ.	DEPT.	OPERATING INSTRUCTIONS	DIE	MACH.

5011 REV

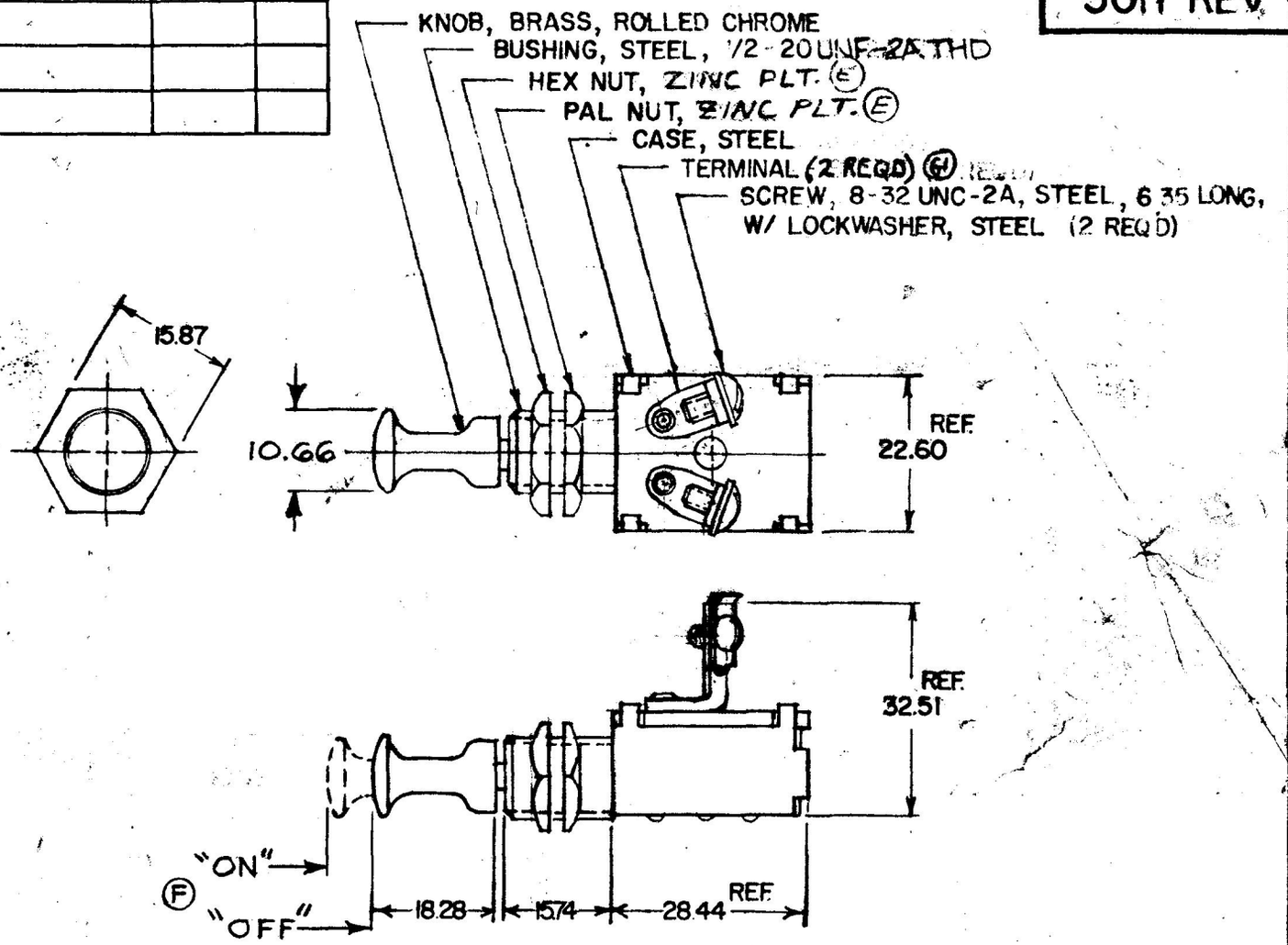

NOTE:
(G) ALL STEEL PARTS PLATED

METRIC

DO NOT SCALE

LET	WAS	DATE	BY	LET	WAS	DATE	BY
				G1 G	STEEL CADDR ZINC / 25234	12/1/92	[illegible]
				F	ADD ON/OFF / 23176	7/23/[illegible]	[illegible]
				[illegible]	[illegible]	[illegible]	[illegible]
				D	REDRAWN	1-29-79	[illegible]

MATERIAL	DRAWN	CHECKED	APPRV'D.	SCALE	DATE DRAWN
—	EHD	TY 1-31-79		1:1	2-19-59

FINISH —

TOLERANCES
FRACTIONAL ±
DECIMAL ±.25

COLE-HERSEE COMPANY
BOSTON, MASS. 02127, U.S.A.

PUSH-PULL SWITCH

DATE BLUEPRINT

5011 REV.

SPAULDING CO., INC.

COLE-HERSEE CO.

Confidential Property of Cole Hersee