SERIES: AMT12 | DESCRIPTION: MODULAR INCREMENTAL ENCODER

FEATURES

- 16 prgrammable resolutions up to 4096 PPR
- single ended quadrature A/B
- resilient to dust, dirt, and oil
- low power consumption
- -40 to +125°C temperature range
- radial and axial cable connections
- configuration and firmware updates via AMT Viewpoint™ software
- fits motor shafts from 1 mm to ¼"

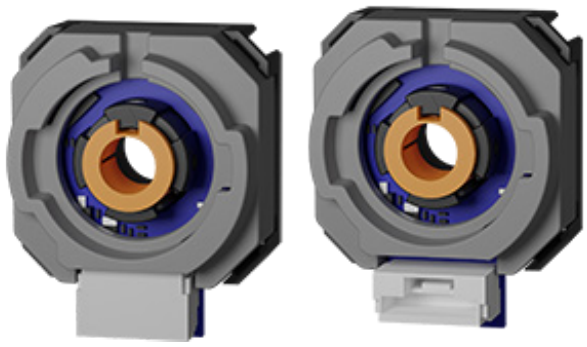

RoHS

ELECTRICAL

parameter	conditions/description	min	typ	max	units
power supply	VDD	4.5	5	5.5	V
start-up time[1]			200		ms
current consumption	with unloaded output		16		mA
output high level		VDD-0.8			V
output low level				0.4	V
output current	CMOS sink/source per channel			2	mA
rise/fall time			30		ns

Note: 1. Encoder must be stationary during start-up.

INCREMENTAL CHARACTERISTICS

parameter	conditions/description	min	typ	max	units
channels	quadrature A & B				
waveform	CMOS voltage square wave				
phase difference	A leads B for CCW rotation (viewed from front)		90		degrees
quadrature resolutions[2]	96, 192, 200, 250, 384, 400, 500, 512, 768, 800, 1000, 1024, 1600, 2000, 2048, 4096				PPR
accuracy			0.25		degrees
quadrature duty cycle (at each resolution)	512, 1024, 2048, 4096 96, 192, 200, 250, 384, 400, 500, 768, 800, 1000 1600, 2000	49 47 43	50 50 50	51 53 56	% % %

Notes: 2. Resolutions programmed with AMT Viewpoint™ PC software. Default resolution set to 2048 PPR. Listed as pre-quadrature, meaning final number of counts is PPR x 4.

MECHANICAL

parameter	conditions/description	min	typ	max	units
motor shaft length		12.3			mm
motor shaft tolerance			NOM +0/-0.015		mm
axial play				±0.3	mm
hub set screw to shaft torque			3		in-lb
rotational speed (at each resolution)	384, 768, 800, 1000, 1600, 2000, 2048, 4096			4000	RPM
	96, 192, 200, 250, 400, 500, 512, 1024			8000	RPM

ENVIRONMENTAL

parameter	conditions/description	min	typ	max	units
operating temperature		-40		125	°C
humidity	non-condensing			85	%
vibration	10~500 Hz, 5 minute sweep, 2 hours on each XYZ			5	G
shock	3 pulses, 6 ms, 3 on each XYZ			200	G
RoHS	yes				

WAVEFORMS

Figure 1
Quadrature signals showing
counter-clockwise rotation

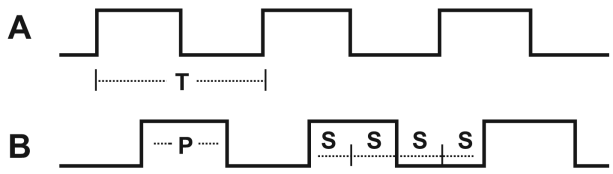

The following parameters are defined by the resolution selected for each encoder. The encoders resolution is listed as Pulses Per Revolution (PPR), which is the number of periods (or high pulses) over the encoders revolution.

Parameter	Description	Expression	Units	Notes
PPR	resolution		Pulses Per Revolution	This is the user selected value and the format all resolutions are listed in
CPR	counts	PPR x 4	Counts Per Revolution	This is the number of quadrature counts the encoder has
T	period	360/R	mechanical degrees	
P	pulse width	T/2	mechanical degrees	
S	A/B state width	T/4	mechanical degrees	This is the width of a quadrature state

Note: For more information regarding PPR, CPR, or LPR (Lines Per Revolution) view https://www.cuidevices.com/blog/what-is-encoder-ppr-cpr-and-lpr

PART NUMBER KEY

For customers that prefer a specific AMT12 configuration, please reference the custom configuration key below.

AMT12 X S - XXXX - XXXX

- **AMT12** — Base Number
- **X** — Orientation:
  2 = Radial
  3 = Axial
- **XXXX** — Quadrature Resolution (PPR):

0096	0768
0192	0800
0200	1000
0250	1024
0384	1600
0400	2000
0500	2048
0512	4096

- **XXXX** — Bore Diameter:
  1000 = 1 mm
  2000 = 2 mm
  3000 = 3 mm
  3175 = 1/8”
  4000 = 4 mm
  4760 = 3/16”
  5000 = 5 mm
  6000 = 6 mm
  6350* = 1/4”

*1/4 inch bore diameter option only available as custom configuration.

AMT12-V KITS

In order to provide maximum flexibility for our customers, the AMT12 series is provided in kit form standard. This allows the user to implement the encoder into a range of applications using one sku#, reducing engineering and inventory costs. AMT12 kit includes all items shown below.

ORDERING GUIDE

AMT12 X S-V

- **X** — Orientation:
  2 = Radial
  3 = Axial

SHAFT ADAPTERS						
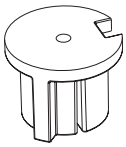	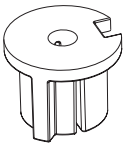	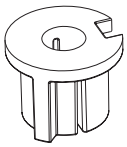	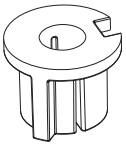	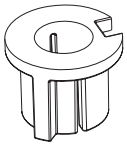	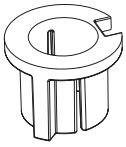	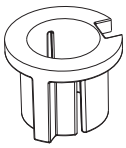
1 mm	2 mm	3 mm	1/8 in	4 mm	3/16 in	5 mm
White	Light Blue	Orange	Purple	Gray	Yellow	Green

AMT12 ENCODER	AMT12 BASE	ALIGNMENT TOOL*	PLACEMENT TOOL	CENTERING TOOL	ALLEN WRENCH
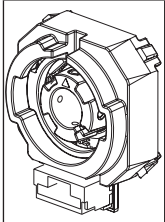 Shaft adapter is not needed for 6 mm shaft	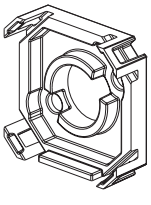	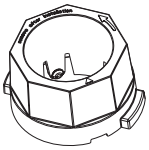	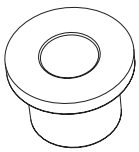		

*Alignment Tool comes pre-installed on all AMT12 Encoders.

ENCODER INTERFACE

CONNECTOR PINOUT		
	Function	
#	AMT122	AMT123
1	+5 V	+5 V
2	GND	GND
3	A	A
4	B	B
5	ENC_TX+	ENC_TX+
6	ENC_RX+	ENC_RX+
7	MCLR	MCLR
8	N/A	N/A

AMT122

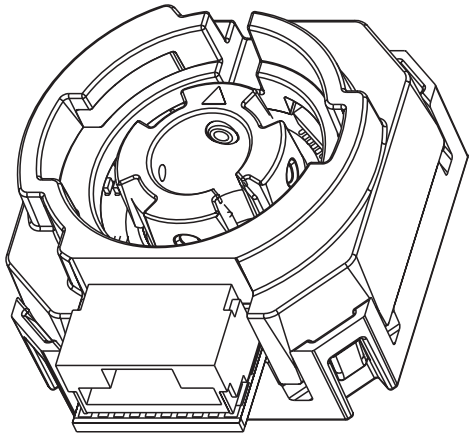

AMT123

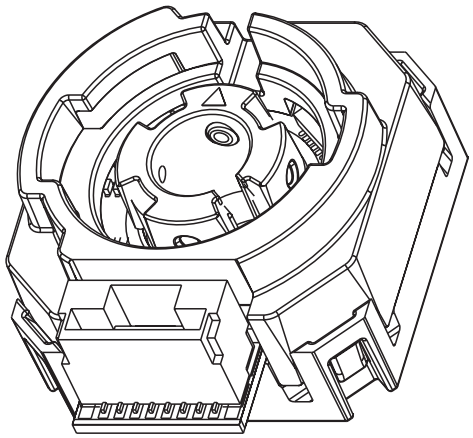

Mating Connector:
JST NSHR-08V-S

MECHANICAL DRAWING

units: mm
tolerance:
X.X ±0.25 mm
X.XX ±0.15 mm

AMT122

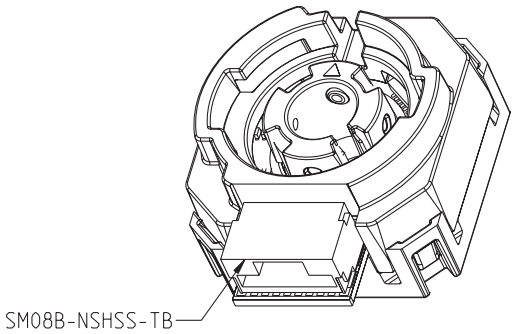

AMT123

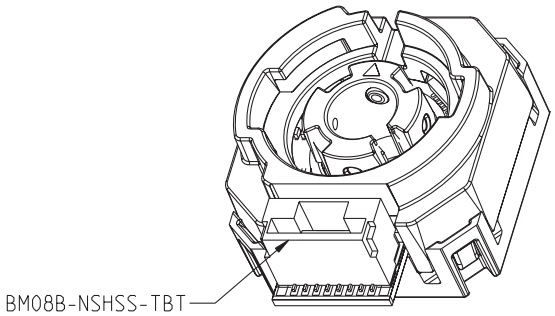

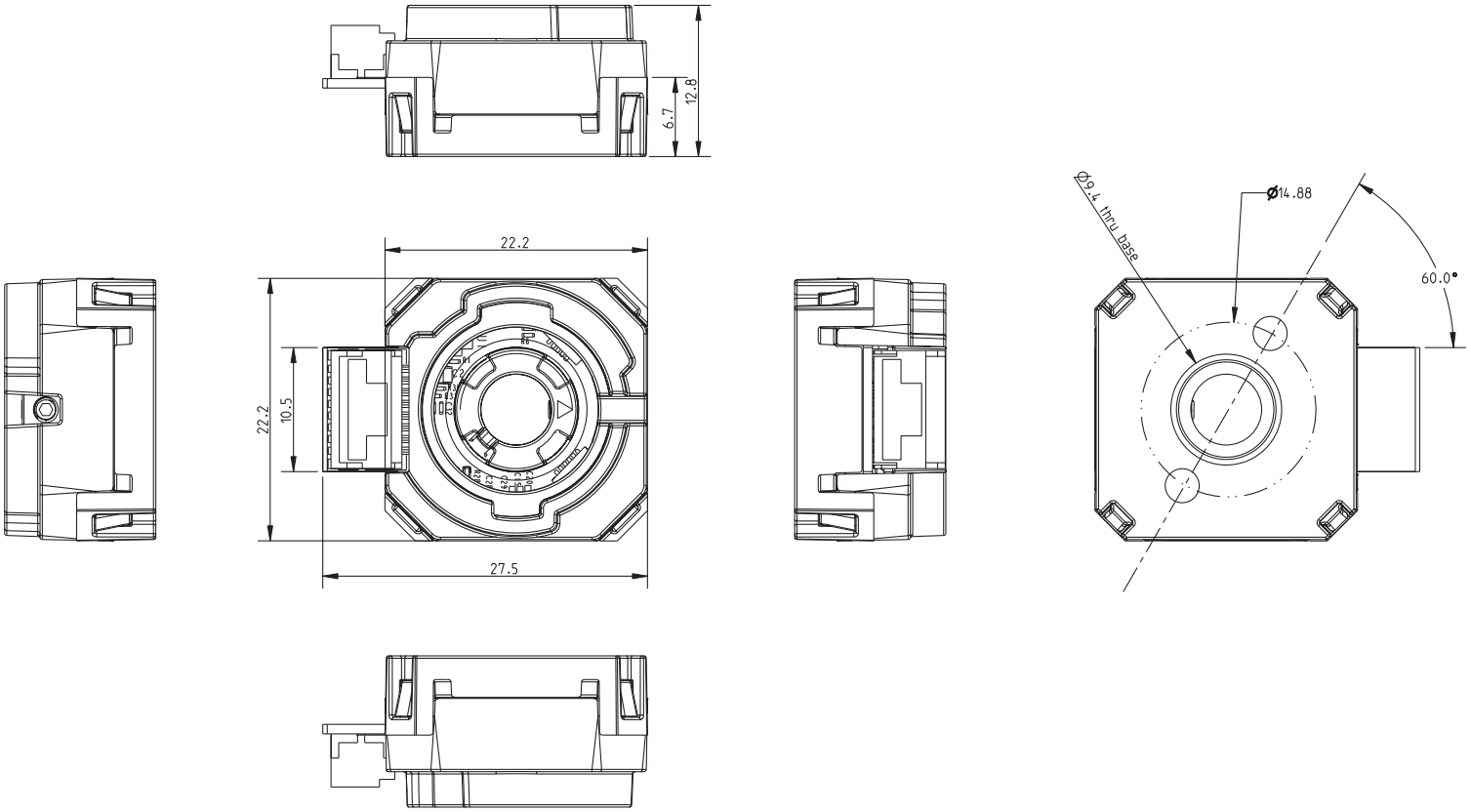

ASSEMBLY PROCEDURE

STEP 1

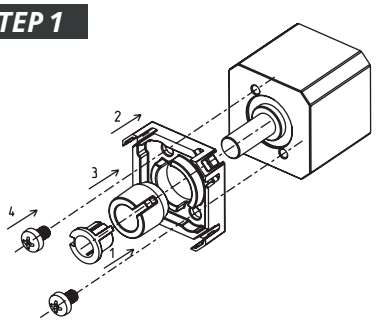

1. Begin by selecting the appropriately sized shaft adapter and insert it into the centering tool. No adapter is needed for a 6 mm motor shaft.
2. Place the plastic base over the motor shaft.
3. Slide the centering tool and shaft adapter over the motor shaft. The centering tool will hold the base in the proper position.
4. While holding the centering tool down in place, install screws to secure the base to the motor body.

STEP 2

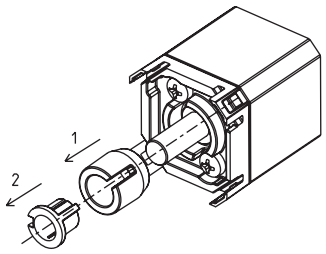

1. Remove the centering tool.
2. Take the shaft adapter out of the centering tool.

STEP 3

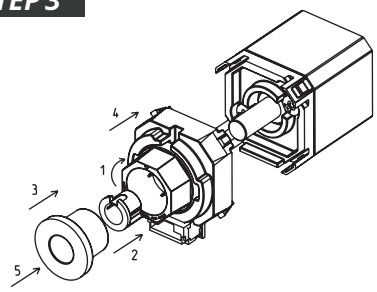

1. Rotate the pre-installed alignment tool clockwise and completely to the right so that the pre-installed shaft set screw is visible.
2. Insert the shaft adapter into the encoder making sure the adapter is properly aligned with the keyway in the metal hub. No adapter is needed for a 6 mm motor shaft.
3. Insert the placement tool into the assembly. This placement tool holds the encoder's hub and shaft adapter in the proper position for installation onto the motor shaft.
4. Position the encoder so it can snap onto the plastic base. The encoder will only snap into place in one orientation.
5. Slide the encoder onto the motor shaft applying force only to the placement tool to maintain proper alignment of the encoder's hub and shaft adapter.
6. Ensure all 4 locking tabs are secured in place over the encoder hub.

STEP 4

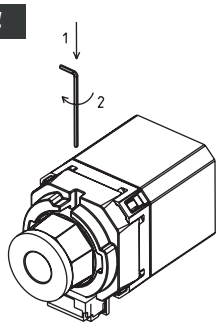

1. Insert the Allen Wrench into the notch on the top.
2. Tighten the shaft set screw. Torque to the specification listed on the applicable AMT encoder datasheet.

STEP 5

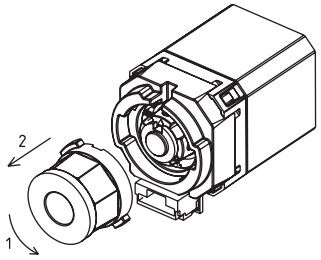

1. Rotate the placement tool and alignment tool counterclockwise until the tabs align with the openings.
2. Remove both tools from the encoder.
3. When installation is finished, the motor shaft should be rotating freely.

REVISION HISTORY

rev.	description	date
1.0	initial release	09/03/2020
1.01	added motor shaft tolerance details, updated start-up details	09/10/2021
1.02	logo, datasheet style update	08/05/2022

The revision history provided is for informational purposes only and is believed to be accurate.

CUI Devices offers a one (1) year limited warranty. Complete warranty information is listed on our website.

CUI Devices reserves the right to make changes to the product at any time without notice. Information provided by CUI Devices is believed to be accurate and reliable. However, no responsibility is assumed by CUI Devices for its use, nor for any infringements of patents or other rights of third parties which may result from its use.

CUI Devices products are not authorized or warranted for use as critical components in equipment that requires an extremely high level of reliability. A critical component is any component of a life support device or system whose failure to perform can be reasonably expected to cause the failure of the life support device or system, or to affect its safety or effectiveness.

cuidevices.com