CUI DEVICES

MODEL: PJ-060B | DESCRIPTION: DC POWER JACK

FEATURES
- 2.5 mm center pin
- 5.0 A rating
- vertical orientation
- through hole



RoHS

SPECIFICATIONS

parameter	conditions/description	min	typ	max	units
rated input voltage			24		Vdc
rated input current				5.0	A
contact resistance				30	mΩ
insulation resistance	at 500 Vdc	100			MΩ
voltage withstand	at 50/60Hz for 1 minute			500	Vac
insertion/withdrawal force		0.3		3	kg
operating temperature		-25		70	°C
life			5,000		cycles
flammability rating	UL94V-0				
RoHS	yes				

SOLDERABILITY

parameter	conditions/description	min	typ	max	units
hand soldering	for 3~5 seconds	355	360	365	°C

MECHANICAL DRAWING

units: mm[inches]
tolerance: ±0.3 mm
unless otherwise specified

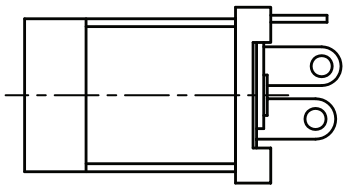

	MATERIAL	PLATING
center pin	copper	nickel
terminal 1	brass	silver
terminal 2	phosphor bronze	silver
terminal 3	brass	silver
plastic	PBT	

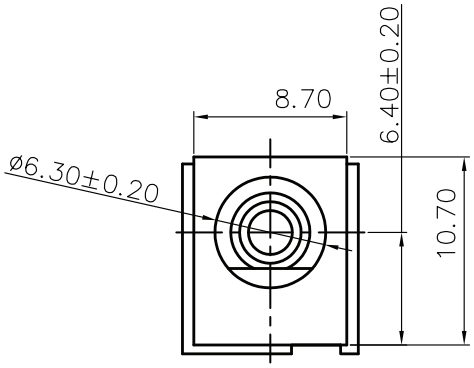

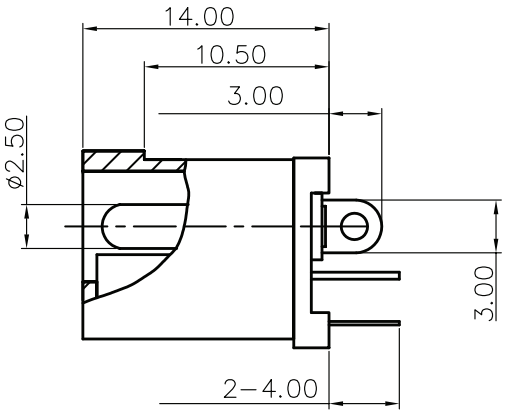

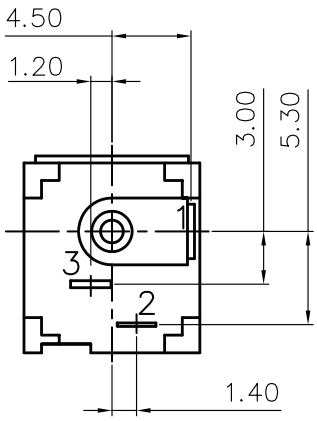

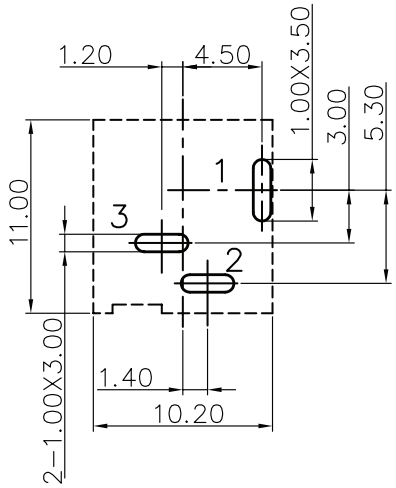

Recommended PCB Layout
Bottom View

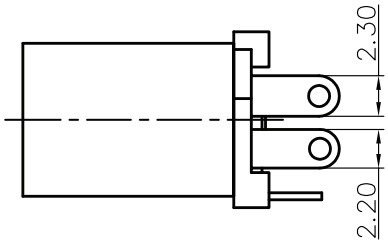

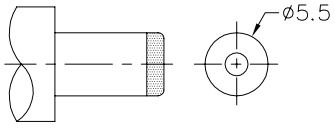

MATING PLUG
Jack Insertion Depth: 9.7 mm

SCHEMATIC	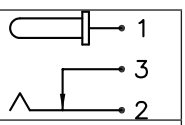
Model	PJ-060B
Center Pin	Ø2.5 mm

REVISION HISTORY

rev.	description	date
1.0	initial release	03/25/2009
1.01	applied new spec template	10/03/2013
1.02	brand update	12/05/2019

The revision history provided is for informational purposes only and is believed to be accurate.

CUI DEVICES

CUI Devices offers a one (1) year limited warranty. Complete warranty information is listed on our website.

CUI Devices reserves the right to make changes to the product at any time without notice. Information provided by CUI Devices is believed to be accurate and reliable. However, no responsibility is assumed by CUI Devices for its use, nor for any infringements of patents or other rights of third parties which may result from its use.

CUI Devices products are not authorized or warranted for use as critical components in equipment that requires an extremely high level of reliability. A critical component is any component of a life support device or system whose failure to perform can be reasonably expected to cause the failure of the life support device or system, or to affect its safety or effectiveness.

cuidevices.com