In Addition to GlobTek Inc.'s renewed ISO9001:2015 - Quality Management System Certification, GlobTek Inc. is now certified to:

ISO13485:2016 - Medical Devices Quality Management System Certification
ISO14001:2015 - Environmental Management System Certification

ISO Certificates are available online at https://www.globtek.com/iso-certificates/

The acceptance of this specification and use of the product described in this document indicates the acceptance and binding of the customer to Globtek TERMS AND CONDITIONS (attached to the end of this document), which supersede all other agreements, terms, and conditions (https://www.globtek.com/terms-and-conditions/).

The purchaser of this product (Customer) agrees that it is their sole responsibility to determine suitability/fitness of the product described in this specification for their application and to take precautions for protection against any hazards attendant to the handling and use of the product.

Footnote:

GlobTek Inc. will not be liable for the safety and performance of these power supplies/battery packs if unauthorized access and repair occurs. End user should consult applicable UL, CSA or EN standards for proper installation instruction.

Limitation of Use:

GlobTek products are intended for use with commercial, medical, and/or industrial equipment only. GlobTek product are not authorized for use as mission critical components in life support hazardous environment, nuclear or aircraft applications without prior written approval from the CEO of GlobTek Inc.
Contents of this document are subject to change without prior notice.

Customer Approval of Specification:

Please approve, sign and send back to GlobTek so we can complete order processing.
A delay in receipt of this form will delay delivery schedule.

Company Name:	Customer P/N:
Quote Number:	Date:
Authorized Representative Name:	Authorized Representative Signature:

PROPRIETARY INFORMATION
PROPRIETARY OF GLOBTEK, INC. ANY REPRODUCTION, DISCLOSURE OR USE OF THIS DRAWING, IN WHOLE OR IN PART, IS HEREBY PROHIBITED EXCEPT AS SPECIFIED IN WRITING BY GLOBTEK, INC. © GlobTek, Inc. 2022 - 2024
guest / 05/27/2024 8:18:06 AM GMT CLONED FROM WR9QA3460MICBCMNAR6B

REVISION HISTORY

REV	DESCRIPTION	SUB	DATE	APPROVED
A	Initial release	dhock	09/07/2022	DOROTHEA

POWER SUPPLY INFORMATION

TYPE	Wall Plug-in
TECHNOLOGY	Regulated Switchmode AC-DC Power Supply AC Adaptor
CASE COLOR	GlobTek Black
NAMEPLATE RATED INPUT	100-240V~, 50-60 Hz, 0.6 A
INPUT CONFIG	Interchangeable Blades
WATTS	18.00
VOLTS OUT	5.2
CURRENT OUT (Amps)	3.46
BLADE/CORD INCLUDED	Q-EU(R) Q-Series Europe
INGRESS PROTECTION	IP42 (Optional IP54-IP55)
GROUNDING CONFIGURATION	(F1) Floating output, Class II / double insulated
EFFICIENCY LEVEL	USA DOE Level VI / Eco-design Directive 2009/125/EC, (EU) 2019/1782 - Europe Code of Conduct on Energy Efficiency of External Power Supplies - Version 5
OUTPUT CONFIGURATION	1200 mm, 18/1C + Shield Cond, UL 1185, Micro USB type B without resistor, Ferrite: None, GlobTek Black, GT Cord # C40085
OVERMOLDED	Yes
OUTPUT CONNECTOR GENDER	Male
CONNECTOR PIN OUT	Pin 1: +V, Pin 2-4: N/C, Pin 5: GND
LABEL SPECS	ISO 15223 medical device compliant label,L-1470
SPECIAL BARCODE LABEL MATERIAL	No
PACK SPEC	Standard WPI Q-EU installed, Individually Box, User manual
USER MANUAL	809-PSUQKITUSERMANUAL on A4 paper

PROPRIETARY INFORMATION
PROPRIETARY OF GLOBTEK, INC. ANY REPRODUCTION, DISCLOSURE OR USE OF THIS DRAWING, IN WHOLE OR IN PART, IS HEREBY PROHIBITED EXCEPT AS SPECIFIED IN WRITING BY GLOBTEK, INC. © GlobTek, Inc. 2022 - 2024
guest / 05/27/2024 8:18:06 AM GMT CLONED FROM WR9QA3460MICBCMNAR6B

Notes/Modifications/Customizations (notes in this section supersede the values shown in the standard spec)

DIMENSIONS ARE IN MM UNLESS SPECIFIED OTHERWISE

PROPRIETARY INFORMATION

PROPRIETARY OF GLOBTEK, INC. ANY REPRODUCTION, DISCLOSURE OR USE OF THIS DRAWING, IN WHOLE OR IN PART, IS HEREBY PROHIBITED EXCEPT AS SPECIFIED IN WRITING BY GLOBTEK, INC. © GlobTek, Inc. 2022 - 2024

guest / 05/27/2024 8:18:06 AM GMT CLONED FROM WR9QA3460MICBCMNAR6B

ELECTRICAL SPECIFICATIONS

Input

Input Voltage:	Specified: 90-264VAC, Nameplate: 100-240VAC 100% rated load current for 90-264VAC 85% rated load current for 85-264VAC 100% rated load current for 110-370VDC
Input Frequency:	Specified: 47-63Hz, Nameplate: 50-60Hz
No Load Input Power:	<75mW @ 230VAC (EU CoC Tier 2 compliant)
Inrush Current:	30A/60A maximum, cold start @ 115VAC/230VAC input, respectively
Efficiency:	DoE Level VI compliant, EU CoC Tier 2 compliant

Output

Turn-on Delay:	1 second max. @ nominal line and full load
Output Regulation	± 5% max. (measured at the output connector)
Line Regulation:	± 0.5% typ. (measured at the output connector, full load)
Ripple:	1% or 100mV, whichever is greater (measured using a 47μF low-ESR cap + 0.1μF ceramic capacitor, measured @ 20MHz BW, at output connector)
Transient Response:	5% max. deviation (with 40-70% load step), 1ms typ. recovery time
Hold-up Time:	8ms typ. @ nominal line and full load
Power On Indicator:	Green LED

Protections

Input Protection:	MOV transient suppressor, input line fusing
Over-Voltage Protection:	110-130% of nominal output voltage
Short-Circuit Protection:	Auto-restart
Over-Current Protection:	110-160% of rated output current (Current limit range is determined by normal output power rating, not derated power level)

PROPRIETARY INFORMATION
PROPRIETARY OF GLOBTEK, INC. ANY REPRODUCTION, DISCLOSURE OR USE OF THIS DRAWING, IN WHOLE OR IN PART, IS HEREBY PROHIBITED EXCEPT AS SPECIFIED IN WRITING BY GLOBTEK, INC. © GlobTek, Inc. 2022 - 2024
guest / 05/27/2024 8:18:06 AM GMT CLONED FROM WR9QA3460MICBCMNAR6B

Environmental

MTBF:	1,500,000 hours @ 25°C ambient, full load (Telcordia SR-332, Issue 3)
Operating Temperature:	-20°C to 40°C (full load) See derating table for output power capability at other temperatures. Extended low temperature range available as a custom option.
Storage Temperature:	-30°C to 80°C
Humidity:	0% to 95% relative humidity, non-condensing
Altitude:	5000m
Ingress protection:	IP42 standard, IP52 available as a special option
Cooling:	Convection
RoHS:	Complies with EU 2011/65/EU amended by EU 2015/863 and China SJ/T 11363-2006

Safety

Dielectric Withstand Voltage:	4000VAC or 5656VDC from input to output 3000VAC or 4242VDC from input to earth (Class I models)
Touch Current:	Class I models: < 20uA Class II models: <75uA
Earth Leakage Current:	Class I models: <300uA Class II models: N/A
Isolation Options:	Floating output or Class I earthed output (desktop models)
Earth Continuity Test:	< 0.1 ohm between AC inlet earth pin and PCB termination point
Means of Protection (Primary-to-Secondary):	2 x MOPP
Compliant Standards:	See listing at the end of this document.

PROPRIETARY INFORMATION
PROPRIETARY OF GLOBTEK, INC. ANY REPRODUCTION, DISCLOSURE OR USE OF THIS DRAWING, IN WHOLE OR IN PART, IS HEREBY PROHIBITED EXCEPT AS SPECIFIED IN WRITING BY GLOBTEK, INC. © GlobTek, Inc. 2022 - 2024
guest / 05/27/2024 8:18:06 AM GMT CLONED FROM WR9QA3460MICBCMNAR6B

EMC

Applicable Standards:	Medical: EN60601-1-2, 4th edition Emissions: EN55032, EN61000-6-3, EN61000-6-4 Immunity: EN55024, EN61000-6-1, EN61000-6-2
Conducted Emissions:	Class B, FCC Part 15, Class B (with resistive load)
Radiated Emissions:	Class B, FCC Part 15, Class B (with resistive load)
Harmonic Current Voltage Distortion:	EN61000-3-2, Class A
Voltage Fluctuations/Flicker:	EN61000-3-3
Electrostatic Discharge (ESD) Immunity:	EN61000-4-2, 8KV contact discharge, 20KV air discharge
Radiated RF Immunity:	EN61000-4-3, 10V/m 80-1000MHz, 3V/m 1-2.7GHz, 80% 1KHz AM
EFT/Burst Immunity:	EN61000-4-4, 4KV/100kHz.
Line Surge Immunity:	EN61000-4-5, 2KV differential, 4KV common-mode
Conducted RF Immunity:	EN61000-4-6, 3VRMS, 80% 1KHz AM
Power Frequency Magnetic Field Immunity:	EN61000-4-8, 30A/m
Voltage Dip Immunity:	EN61000-4-11

Enclosure

Housing:	High impact plastic, 94V0 polycarbonate, non-vented
AC Input Mechanical Options:	Wall plug-in, changeable blades (Class II only) Desktop housing, extended housing: C6, C8, C14, or C18 IEC inlet (Class I or Class II)
Markings:	Label or laser printed

Special Options

1. Removal of LED (optional)
2. Custom cord-sets (custom cord and/or connector types). Note: 5VDC USB power supplies with Micro-B or Type-C connectors have a voltage regulation specification of ±8% (4.6V to 5.4V).
3. Custom markings
4. Short term output surge capability
5. Reduced leakage current versions (10uA max) for Type-CF medical applications and/or for AC noise sensitive equipment. (15W or less, 5 to 24V output voltage range.)
6. Tightened output voltage tolerance
7. Reduced output voltage ripple
8. Improved reliability PCB laminate with plated-through-holes for IPC610 Class 2 compliance
9. Custom housing colors
10. Quasi constant-current output for SLA (lead-acid) battery charging applications

PROPRIETARY INFORMATION
PROPRIETARY OF GLOBTEK, INC. ANY REPRODUCTION, DISCLOSURE OR USE OF THIS DRAWING, IN WHOLE OR IN PART, IS HEREBY PROHIBITED EXCEPT AS SPECIFIED IN WRITING BY GLOBTEK, INC. © GlobTek, Inc. 2022 - 2024
guest / 05/27/2024 8:18:06 AM GMT CLONED FROM WR9QA3460MICBCMNAR6B

TO ADDRESS SYSTEM-LEVEL EMI CONCERNS, FERRITE CHOKES/BEADS MAY BE ADDED/REVISED UPON REQUEST. A SAMPLE KIT OF GLOBTEK'S STANDARD FERRITES IS AVAILABLE UNDER GLOBTEK P/N: EMI-MITIGATION-KIT1

FOR ADDITIONAL INFORMATION, PLEASE READ OUR WHITE PAPER AT: https://r.globtek.info/3QeaqtD

INGRESS PROTECTION: IP42 (Optional IP54-IP55)

PROPRIETARY INFORMATION

PROPRIETARY OF GLOBTEK, INC. ANY REPRODUCTION, DISCLOSURE OR USE OF THIS DRAWING, IN WHOLE OR IN PART, IS HEREBY PROHIBITED EXCEPT AS SPECIFIED IN WRITING BY GLOBTEK, INC. © GlobTek, Inc. 2022 - 2024

guest / 05/27/2024 8:18:06 AM GMT CLONED FROM WR9QA3460MICBCMNAR6B

3D File Download https://en.globtek.com/dl/GTM96180-WALL-PLUG_(5).igs

Mechanical drawing

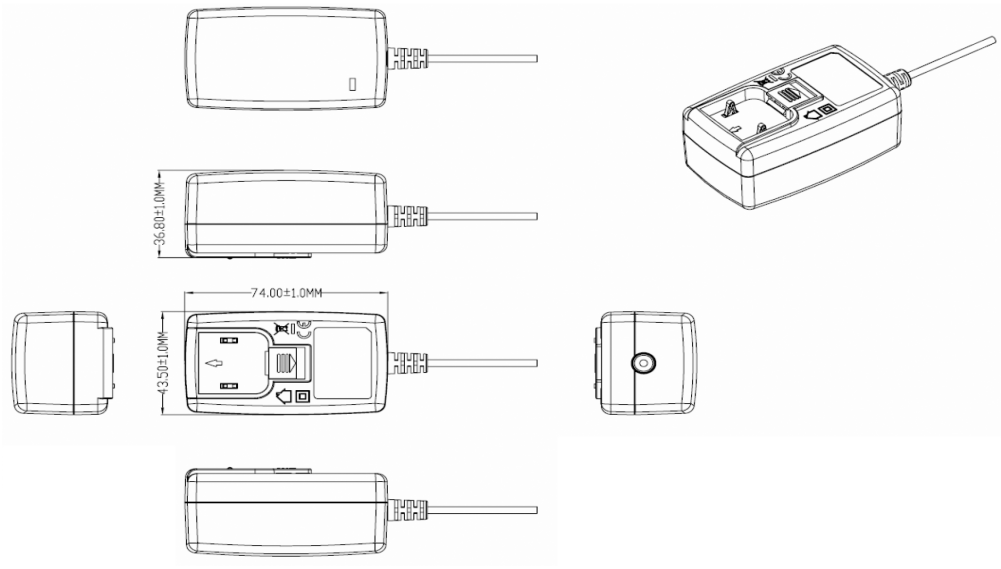

LED INDICATOR: Green Power ON indicator LED standard. May be ordered without LED as an option.

PROPRIETARY INFORMATION

PROPRIETARY OF GLOBTEK, INC. ANY REPRODUCTION, DISCLOSURE OR USE OF THIS DRAWING, IN WHOLE OR IN PART, IS HEREBY PROHIBITED EXCEPT AS SPECIFIED IN WRITING BY GLOBTEK, INC. © GlobTek, Inc. 2022 - 2024

guest / 05/27/2024 8:18:06 AM GMT CLONED FROM WR9QA3460MICBCMNAR6B

DERATING CURVE

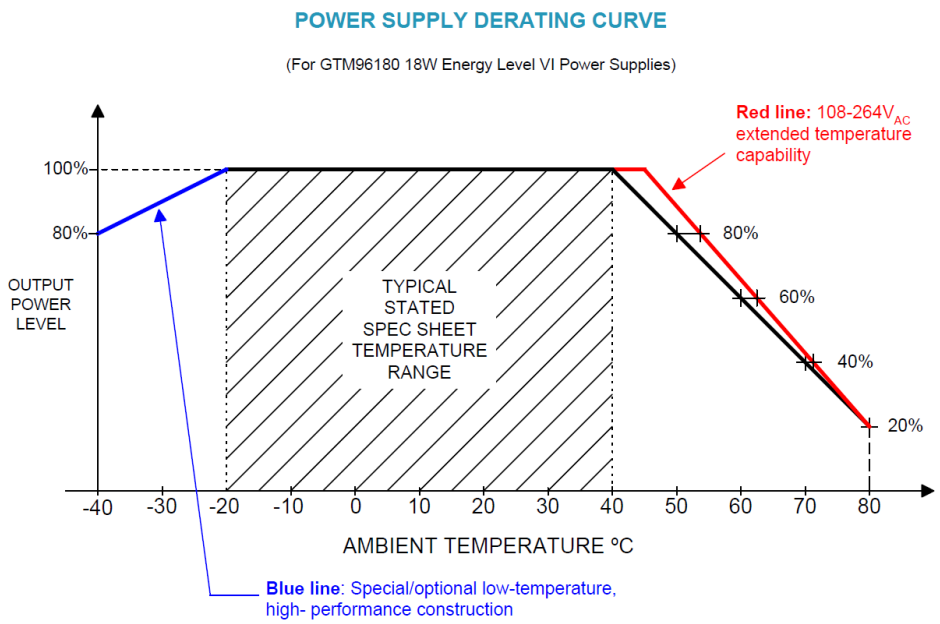

PROPRIETARY INFORMATION

PROPRIETARY OF GLOBTEK, INC. ANY REPRODUCTION, DISCLOSURE OR USE OF THIS DRAWING, IN WHOLE OR IN PART, IS HEREBY PROHIBITED EXCEPT AS SPECIFIED IN WRITING BY GLOBTEK, INC. © GlobTek, Inc. 2022 - 2024

guest / 05/27/2024 8:18:06 AM GMT CLONED FROM WR9QA3460MICBCMNAR6B

INPUT CONFIGURATION

(F1) Floating output, Class II / double insulated

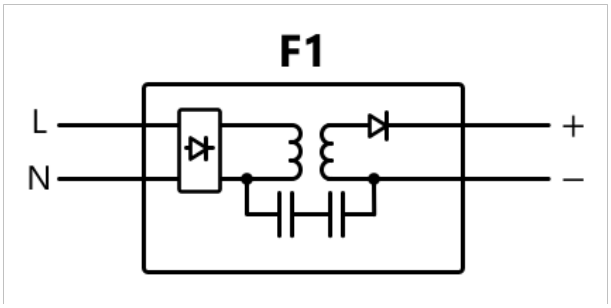

Alternate grounding configurations available upon request.

Blades/Cord Included:Q-EU(R):Q-Series Europe

Q Blades (Interchangeable)
Blade Options for Q Series Wall Plug-in Power Supplies

Data Sheet: http://en.globtek.com/interchangeable-blades.php

Insertion Instructions: http://www.globtek.com/pdf/Instructions-Interchangeable-Blades.pdf

Video: Q-Blade Style Instruction Video

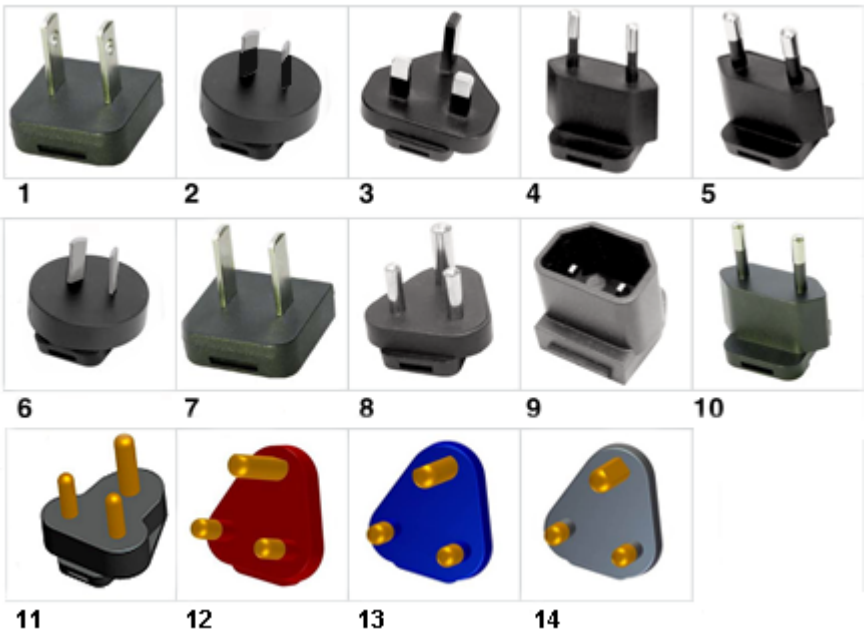

PROPRIETARY INFORMATION
PROPRIETARY OF GLOBTEK, INC. ANY REPRODUCTION, DISCLOSURE OR USE OF THIS DRAWING, IN WHOLE OR IN PART, IS HEREBY PROHIBITED EXCEPT AS SPECIFIED IN WRITING BY GLOBTEK, INC. © GlobTek, Inc. 2022 - 2024
guest / 05/27/2024 8:18:06 AM GMT CLONED FROM WR9QA3460MICBCMNAR6B

INPUT CONNECTOR: Q-Socket (below are available blades configurations which are "not included" (unless stated above); can be purchased separately, package with power supply or as a separate "Q-KIT" if specified

01. United States / Canada / Japan NEMA 1-15P/ IEC PLUG Type A [WORKS IN PLUG B] configuration: NA 2 blades, Class II; US/CA/JP P/N: Q-NA(R)
02. Australian AS 3112 configuration: SAA 2 blade/ IEC TYPE I, Class II; AU P/N: Q-SAA(R)
03. UK BS 1363 configuration: UK 3 blade with dummy Ground/ IEC TYPE G, Class II; GB P/N: Q-UK(R)
04. European CEE 7/16 configuration: Europlug 2 pins/ IEC TYPE C [WORKS IN TYPE E&F], Class II; EU P/N: Q-EU(R)
05. Korean KS C8305 configuration: 2 pins/SIMILAR TO IEC TYPE C, Class II; KR P/N: Q-KR(R)
06. Argentina IRAM 2073 configuration: 2 blades/SIMILAR TO IEC TYPE I; AR P/N: Class II Q-AR(R)
07. China GB 2099 configuration: 2 blades/SIMILAR TO TYPE A, Class II; CN P/N:Q-CN(R)
08. India IS 1293 6A/BS546 configuration: 5A, 3 pins with Dummy Ground, Class II/IEC TYPE D; IN P/N: Q-IN(R)
09. IEC60320/C18 Inlet, Class II; P/N: Q-C18(R)
10. Brazilian NBR6147 configuration: 2 pins, Class II;SIMILAR TO IEC TYPE C BR P/N: Q-BR(R)
11. South Africa SABS164-1 and India IS 1293, IS694, 16A type plug, 3 round prongs, Class II + dummy ground, IEC TYPE M P/N: Q-SANS164-1-16A(R)
12. South Africa SABS164-4, 3 round prongs with a notched prong @ 0º, Class II + dummy ground, IEC TYPE M Red, P/N:
Q-SANS164-4C-16A(R)
13. South Africa SABS164-4, 3 round prongs with a notched prong @ -53º, Class II + dummy ground, Blue, IEC TYPE M, P/N:
Q-SANS164-4L-16A(R)
14. South Africa SABS164-4, 3 round prongs with a notched prong @ +53º, Class II + dummy ground, Black,IEC TYPE M P/N:
Q-SANS164-4R-16A(R)

Kits

01. Q-KIT: 1,2,3,4 above
02. Q-KIT-INTL: 2,3,4 above
03. Q-KIT-6: 1,2,3,4,5,6 above
04. Q-KIT-7: 1,2,3,4,5,6,7 above
05. Q-KIT-8: 1,2,3,4,5,6,7,8 above

PROPRIETARY INFORMATION
PROPRIETARY OF GLOBTEK, INC. ANY REPRODUCTION, DISCLOSURE OR USE OF THIS DRAWING, IN WHOLE OR IN PART, IS HEREBY PROHIBITED EXCEPT AS SPECIFIED IN WRITING BY GLOBTEK, INC. © GlobTek, Inc. 2022 - 2024
guest / 05/27/2024 8:18:06 AM GMT CLONED FROM WR9QA3460MICBCMNAR6B

GlobTek, Inc.
www.globtek.com
186 Veterans Drive,
Northvale, NJ 07647
Tel. (201) 784-1000
Fax (201) 784-0111

Drawing Title: GTM96180-1807-1.8, ICT / ITE / Medical Power Supply/Class 2/Household Power Supply, Efficiency Level: USA DOE Level VI / Eco-design Directive 2009/125/EC, (EU) 2019/1782, Case Color/Style: GlobTek Black, Wall Plug-in, Regulated Switchmode AC-DC Power Supply AC Adaptor, Input Rating: 100-240V~, 50-60 Hz, Interchangeable Blades, https://www.globtek.com/interchangeable-blades.php, Output Rating: 18.00W, 5.2V@3.46A, Pin Out: Pin 1: +V, Pin 2-4: N/C, Pin 5: GND, Output Configuration: 1200 mm, 18/1C + Shield Cond, UL 1185, Micro USB type B without resistor, Ferrite: None, GlobTek Black, GT Cord # C40085, Blades/Input Cord: Q-Series Europe, Approvals:

Model No. GTM96180-1807-1.8

Part No./Ordering No. WR9QA3460MICBCMEUR6B | Rev A

OUTPUT CORD AND CONNECTOR: MICUSB/C40085

ACTUAL CONNECTORS, OVERMOLDS, FERRITES MAY VARY SLIGHTLY FROM THE PICTURE BELOW

CABLE TYPE	UL 1185
CABLE LENGTH (mm)	1200
CABLE TOLERANCE (mm)	+150 -0
WIRE GAUGE (AWG)	18
CONDUCTORS	1C + Shield
HANK DIMENSION (mm)	80+/-10
CABLE / CONNECTOR OVERMOLD COLOR	GlobTek Black
FERRITE TYPE AND DIMENSION	None
FERRITE NUMBER OF TURNS(Definition)	N/A
FERRITE DIMENSION FROM STRAIN RELIEF	N/A
FERRITE DIMENSION FROM PLUG	N/A
PLUG TYPE	Micro USB type B without resistor
OUTPUT CONNECTOR GENDER	Male
OVERMOLDED	Yes
OVER MOLD ORIENTATION	Straight
CONNECTOR PIN OUT	Pin 1: +V, Pin 2-4: N/C, Pin 5: GND
ADDITIONAL REQUIREMENTS	MicroUSB connector is GlobTek PN 451-02180281(R), MICRO USB TYPE "B" PIN plating gold 30U" 5A CONNECTOR Or equivalent
	UL1310 Warning Label Up To 36 Volts with plugs

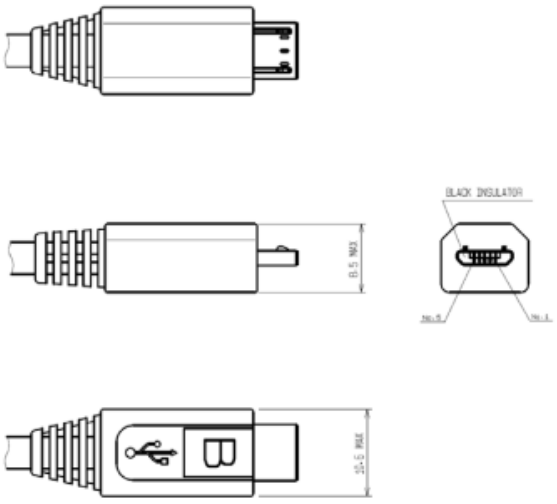

PROPRIETARY INFORMATION
PROPRIETARY OF GLOBTEK, INC. ANY REPRODUCTION, DISCLOSURE OR USE OF THIS DRAWING, IN WHOLE OR IN PART, IS HEREBY PROHIBITED EXCEPT AS SPECIFIED IN WRITING BY GLOBTEK, INC. © GlobTek, Inc. 2022 - 2024
guest / 05/27/2024 8:18:06 AM GMT CLONED FROM WR9QA3460MICBCMNAR6B

ADDITIONAL OUTPUT PLUG OPTIONS ARE AVAILABLE AT https://www.globtek.com/en/connectors
STANDARD PLUGS AND CONNECTORS CAN BE SEEN ONLINE AT https://www.globtek.com/en/connectors
CALCULATE VOLTAGE REGULATION/DROP WITH OUR ONLINE CALCULATOR: https://www.globtek.com/r2/PtqjjL

PROPRIETARY INFORMATION
PROPRIETARY OF GLOBTEK, INC. ANY REPRODUCTION, DISCLOSURE OR USE OF THIS DRAWING, IN WHOLE OR IN PART, IS HEREBY PROHIBITED EXCEPT AS SPECIFIED IN WRITING BY GLOBTEK, INC. © GlobTek, Inc. 2022 - 2024
guest / 05/27/2024 8:18:06 AM GMT CLONED FROM WR9QA3460MICBCMNAR6B

OUTPUT CONNECTOR HOOK UP

TO ADDRESS SYSTEM-LEVEL EMI CONCERNS, FERRITE CHOKES/BEADS MAY BE ADDED/REVISED UPON REQUEST. A SAMPLE KIT OF GLOBTEK'S STANDARD FERRITES IS AVAILABLE UNDER GLOBTEK P/N: EMI-MITIGATION-KIT1

FOR ADDITIONAL INFORMATION, PLEASE READ OUR WHITE PAPER AT:
https://www.globtek.com/en/technical-articles/ferrite-kit-radiated-emi-suppression-kit-for-globtek-power-supplies-cable-assemblies

PROPRIETARY INFORMATION
PROPRIETARY OF GLOBTEK, INC. ANY REPRODUCTION, DISCLOSURE OR USE OF THIS DRAWING, IN WHOLE OR IN PART, IS HEREBY PROHIBITED EXCEPT AS SPECIFIED IN WRITING BY GLOBTEK, INC. © GlobTek, Inc. 2022 - 2024
guest / 05/27/2024 8:18:06 AM GMT CLONED FROM WR9QA3460MICBCMNAR6B

LABEL:L-1470

LABEL P/N	ISO 15223 medical device compliant label
MATERIAL	Flat Thermal Transfer, Imprintable, Polyester Label and/or Pad Printed and/or Molded, and/or Laser Engraved in the case
BACKGROUND COLOR	Black if housing is Black, White or Silver if housing is White or Gray.
TEXT COLOR	White or Silver if label is Black Background for Black housing. Black if label is White or Silver background and Housing is White or Gray.
LABEL WIDTH (mm)	29.8
LABEL HEIGHT (mm)	20.8
SPECIAL BARCODE LABEL MATERIAL	No

Below is the minimum information which will appear on the label. NOTE: in the logo area additional/actual positioning of symbols and text is subjected to change as per agency updates/requirements or additional model approvals become available.
Agency logos may be in Regulatory Certifications/Label Markings area on the label or molded into the case housing outside the label area. Information will be shown via Label and/or Pad Printed and/or Molded in the case.

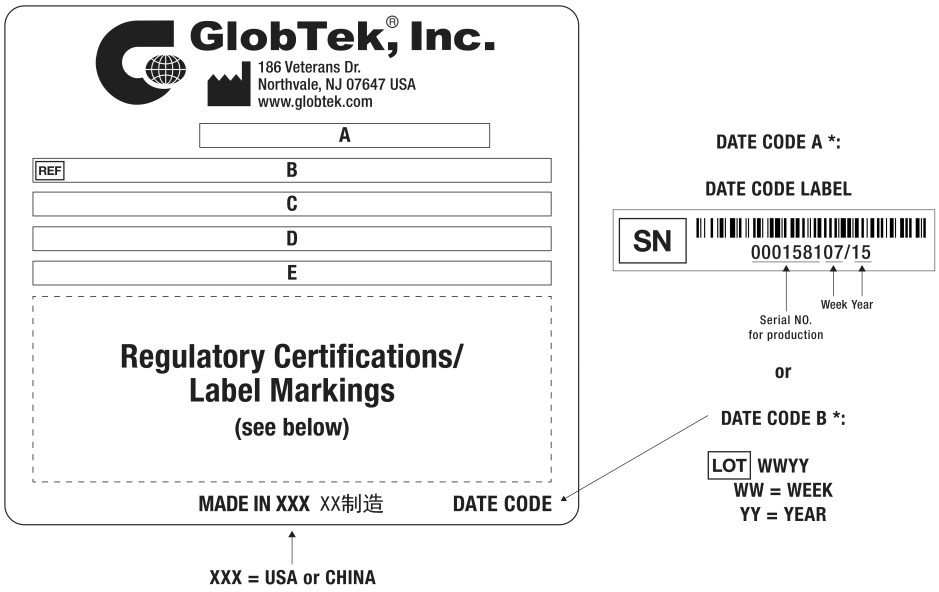

A=ICT / ITE / Medical Power Supply/Class 2/Household Power Supply
B=P/N: (料号) WR9QA3460MICBCMEUR6B
C=Model (型号) GTM96180-1807-1.8
D=Input (输入)100-240V~, 50-60 Hz, 0.6 A
E=Output (输出)5.2 V ⎓ 3.46 A, 18.00W

PROPRIETARY INFORMATION
PROPRIETARY OF GLOBTEK, INC. ANY REPRODUCTION, DISCLOSURE OR USE OF THIS DRAWING, IN WHOLE OR IN PART, IS HEREBY PROHIBITED EXCEPT AS SPECIFIED IN WRITING BY GLOBTEK, INC. © GlobTek, Inc. 2022 - 2024
guest / 05/27/2024 8:18:06 AM GMT CLONED FROM WR9QA3460MICBCMNAR6B

AGENCY ONLINE DOCUMENTS	http://www.globtek.info/certs/GTM96180/
CE EC-Declaration for Medical	https://cs.globtek.info/ec_declaration_product?id=01t3a000004WpjP&m=1
CE EC-Declaration for Industrial/Commercial/ITE	https://cs.globtek.info/ec_declaration_product?id=01t3a000004WpjP&i=2
CE EC-Declaration for Household	https://cs.globtek.info/ec_declaration_product?id=01t3a000004WpjP&h=2
UKCA-Declaration for Medical	https://cs.globtek.info/ukca_declaration_product?id=01t3a000004WpjP&m=1
UKCA-Declaration for Industrial/Commercial/ITE	https://cs.globtek.info/ukca_declaration_product?id=01t3a000004WpjP&i=2
UKCA-Declaration for Household	https://cs.globtek.info/ukca_declaration_product?id=01t3a000004WpjP&h=2
Morocco SDoC Declaration	https://cs.globtek.info/Morocco_SDoC_Declaration?id=a0Oa000000MjRI5EAN
RoHS/RoHS3 Declaration	https://www.globtek.com/pdf/rohs_cert/01t3a000004WpjPAAS
REACH Declaration	https://www.globtek.com/pdf/iso_certificates/REACH.pdf
Conflict Minerals Declaration	https://www.globtek.com/pdf/conflict-minerals.pdf
Prop 65 Statement	https://www.globtek.com/prop-65-statement.pdf

IPXY rating is based on 3rd party testing and customers should check suitability and test system level IPXY rating before ordering.

Regulatory Certifications/Label Markings

Below follows a link to the latest regulatory certifications and marks for this specific product. National standards as well as certification schemes are constantly changing and so is the set of certification marks and symbols applicable to this product. Various standards, marks and symbols, and certificates are subject to change at any time without notice.

Additional standards or unique country certifications are available upon request. Please contact Globtek to request a quotation.

LATEST PRODUCT/MODEL CERTIFICATIONS:	https://www.globtek.com/ds/HAqqMxigGUh/5k3zqTfcPQm.html
AGENCY ONLINE DOCUMENTS	http://www.globtek.info/certs/GTM96180/

	(F1) Floating output, Class II / double insulated
	Pin 1: +V, Pin 2-4: N/C, Pin 5: GND

PROPRIETARY INFORMATION
PROPRIETARY OF GLOBTEK, INC. ANY REPRODUCTION, DISCLOSURE OR USE OF THIS DRAWING, IN WHOLE OR IN PART, IS HEREBY PROHIBITED EXCEPT AS SPECIFIED IN WRITING BY GLOBTEK, INC. © GlobTek, Inc. 2022 - 2024
guest / 05/27/2024 8:18:06 AM GMT CLONED FROM WR9QA3460MICBCMNAR6B

PACKAGING

Packing Spec P/N	Standard WPI Q-EU installed, Individually Box, User manual
Box Qty	60
Gift Box Size (mm)	58*100*90
Gift Box Color	None
Master Carton Size (mm)	415 x 465 x 225
Master Carton Cubic Volume (m³)	0.04
Master GW (Kg)	15.2 kg
BLADES INCLUDED	Q-EU(R): Q-Series Europe
BLADE/CORD INSTALLED	:
USER MANUAL*	809-PSUQKITUSERMANUAL on A4 paper
USER MANUAL WEB LINK	https://www.globtek.com/pdf/809-PSUQKITUSERMANUAL.jpg

* This specification sheet is considered the user manual for all applications. It is expected that the buyer of this product will use it to formulate their own user manual for their end product and a user manual specifically for the power adapter is not usually required. If a user manual is not specifically listed above then none will be provided with this unit.

Power Supply & Blade(s) packaged together; see above "Blades Included" for actual blades included in the gift box.

If specific packaging is required, this section must specify all requirements and note “no exceptions”. If this section does not specify packaging, it is subject to change without notice at GlobTek’s discretion

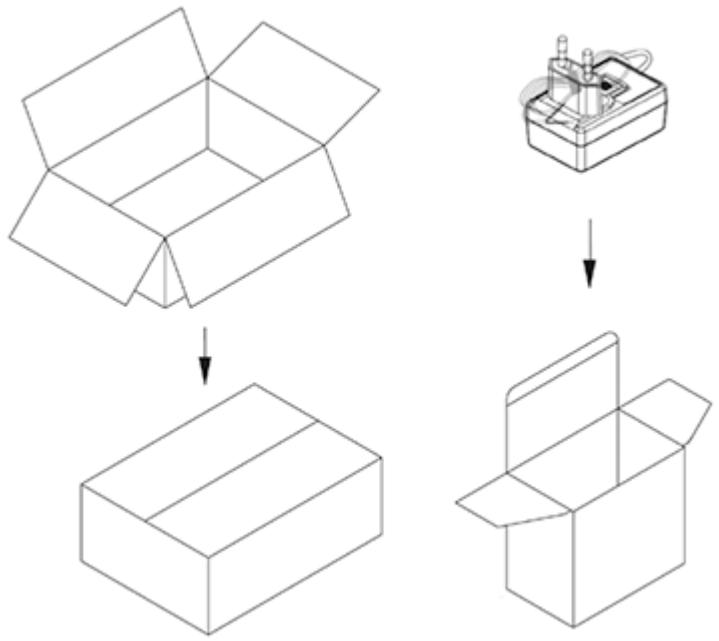

PROPRIETARY INFORMATION
PROPRIETARY OF GLOBTEK, INC. ANY REPRODUCTION, DISCLOSURE OR USE OF THIS DRAWING, IN WHOLE OR IN PART, IS HEREBY PROHIBITED EXCEPT AS SPECIFIED IN WRITING BY GLOBTEK, INC. © GlobTek, Inc. 2022 - 2024
guest / 05/27/2024 8:18:06 AM GMT CLONED FROM WR9QA3460MICBCMNAR6B

INSTRUCTIONS TO THE OEM SYSTEMS ENGINEER

It is the responsibility of the OEM systems engineer to provide the end system user instructions and warnings for the use of this product in the end system.

If an input cord is required for this product, AC Mains voltage should be provided to the power supply by a power supply cord approved to the national standards of the country in which it will be used.

This product is not designed to be repaired. No serviceable parts inside. A blown internal fuse is an indication of catastrophic failure of circuit component(s). If a Failure Analysis is required for a failed power supply/battery charger, please return the damaged unit to GlobTek for an accurate determination of the root cause of the failure.

EMC Compliance of the complete OEM product, including the GlobTek power supply/battery charger needs to be verified by the OEM systems engineer.

PROPRIETARY INFORMATION

PROPRIETARY OF GLOBTEK, INC. ANY REPRODUCTION, DISCLOSURE OR USE OF THIS DRAWING, IN WHOLE OR IN PART, IS HEREBY PROHIBITED EXCEPT AS SPECIFIED IN WRITING BY GLOBTEK, INC. © GlobTek, Inc. 2022 - 2024

guest / 05/27/2024 8:18:06 AM GMT CLONED FROM WR9QA3460MICBCMNAR6B

INSTRUCTION SHEET

Q Blades Instruction Sheet (not required to be packaged with product)

Insertion Instructions: http://www.globtek.com/pdf/Instructions-Interchangeable-Blades.pdf

This manual is Provided to customer within the product specification - it is the responsibility of the OEM/customer to provide the end system user instructions + warnings for the use of this product in the end system. By accepting this specification the customer/OEM Agrees to these terms.

USER MANUAL FOR Q-BLADE SERIES SWITCHING POWER SUPPLIES

Manual del Usuario. Fuentes de Alimentación Series Q-Blade

WARNING! RISK OF FIRE! SHOCK HAZARD!: To prevent electric shock, do not remove the cover. No user-serviceable parts inside. This unit contains hazardous voltages and should only be opened by a trained and qualified technician. Do not use if bent, cracked, modifed or compromised. To avoid the possibility of electric shock, disconnect electric power to the product before connecting or disconnecting.

Advertencia! Riesgo de Fuego! Peligro de Choque eléctrico! No contiene dentro componentes servibles para el usuario. Desconecte el cable de alimentación antes de quitar la cubierta.

INDOOR USE ONLY!

Únicamente para uso en el interior.

POWER SUPPLY BLADE/CORD: AC Mains voltage should be provided to the power supply by a power supply cords approved to the national standards in which it will be used. Please use the below table as a guideline for Suitable Power cords.

CABLE DE ALIMENTACIÓN: El voltaje de la CA debe proporcionarse a la fuente de alimentación mediante los cables de alimentación aprobados conforme a las normas nacionales según las cuales será utilizada. Utilice por favor la tabla mencionada aquí abajo como guía para los cables eléctricos adecuados.

PROPRIETARY INFORMATION

PROPRIETARY OF GLOBTEK, INC. ANY REPRODUCTION, DISCLOSURE OR USE OF THIS DRAWING, IN WHOLE OR IN PART, IS HEREBY PROHIBITED EXCEPT AS SPECIFIED IN WRITING BY GLOBTEK, INC. © GlobTek, Inc. 2022 - 2024

guest / 05/27/2024 8:18:06 AM GMT CLONED FROM WR9QA3460MICBCMNAR6B

1. Class II model NEMA 1-15P AC power plug with 2 prongs, Q-NA(R)
2. Australian AS 3112 configuration: SAA 2 pins Class II, Q-SAA(R)
3. UK BS 1363 configuration: UK 2 pins Class II, Q-UK(R)
4. European CEE 7/16 configuration: Europlug 2 PINS, Class II, Q-EU(R)
5. Korean KS C8305 configuration: Q-KR(R)
6. Argentina IRAM 2073 configuration: 2 pins, Class II Q-AR(R)
7. China GR 2099 configuration: 2 pins, Class II Q-CN(R)
8. India configuration: 2 pins, Class II, Q-IN(R)
9. IEC320/C18 Inlet

FUSING: Internal fuse for Line is provided in the power supply. A blown internal fuse is an indication of catastrophic failure of circuit component(s). Repair must be performed by GlobTek, Inc. authorized personnel. Fuses must be replaced with same type and ratings per GlobTek internal documentation.

PROPRIETARY INFORMATION

PROPRIETARY OF GLOBTEK, INC. ANY REPRODUCTION, DISCLOSURE OR USE OF THIS DRAWING, IN WHOLE OR IN PART, IS HEREBY PROHIBITED EXCEPT AS SPECIFIED IN WRITING BY GLOBTEK, INC. © GlobTek, Inc. 2022 - 2024

guest / 05/27/2024 8:18:06 AM GMT CLONED FROM WR9QA3460MICBCMNAR6B

FUSIBLES: La fuente de alimentación provee un fusible interno para la línea. Un fusible interno quemado es un indicador de una falla catastrófica de los componentes del circuito. La reparación debe ser hecha por personal autorizado de GlobTek, Inc. Los fusibles se deben reemplazar por los mismos tipos y rangos que la documentación interna de GlobTek mencione.

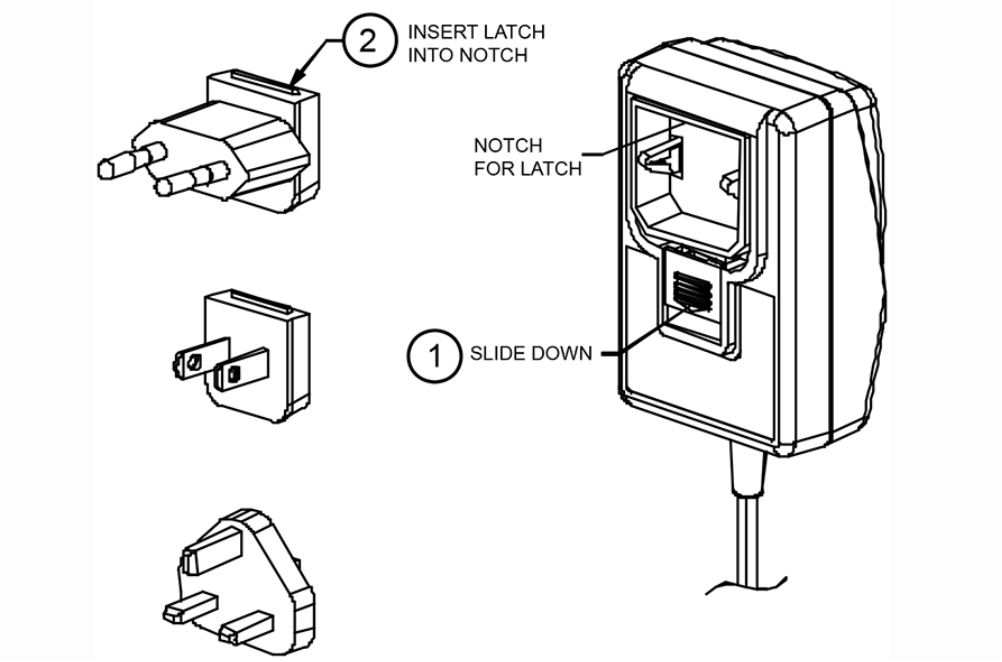

⚠ This symbol on an instrument indicates that the user should refer to the operating instructions located in the manual.

Please note:

The blades shown above are for representation of the installation process and do not indicate which AC blades are included with this power supply. Please reference the specifications “Power Supply Information” (page 2) and “Input Configuration (page 6) for information regarding the actual blade included with this power supply, if any.

PROPRIETARY INFORMATION

PROPRIETARY OF GLOBTEK, INC. ANY REPRODUCTION, DISCLOSURE OR USE OF THIS DRAWING, IN WHOLE OR IN PART, IS HEREBY PROHIBITED EXCEPT AS SPECIFIED IN WRITING BY GLOBTEK, INC. © GlobTek, Inc. 2022 - 2024

guest / 05/27/2024 8:18:06 AM GMT CLONED FROM WR9QA3460MICBCMNAR6B

GlobTek, Inc.
www.globtek.com
186 Veterans Drive,
Northvale, NJ 07647
Tel. (201) 784-1000
Fax (201) 784-0111

Drawing Title: GTM96180-1807-1.8, ICT / ITE / Medical Power Supply/Class 2/Household Power Supply, Efficiency Level: USA DOE Level VI / Eco-design Directive 2009/125/EC, (EU) 2019/1782, Case Color/Style: GlobTek Black, Wall Plug-in, Regulated Switchmode AC-DC Power Supply AC Adaptor, Input Rating: 100-240V~, 50-60 Hz, Interchangeable Blades, https://www.globtek.com/interchangeable-blades.php, Output Rating: 18.00W, 5.2V@3.46A, Pin Out: Pin 1: +V, Pin 2-4: N/C, Pin 5: GND, Output Configuration: 1200 mm, 18/1C + Shield Cond, UL 1185, Micro USB type B without resistor, Ferrite: None, GlobTek Black, GT Cord # C40085, Blades/Input Cord: Q-Series Europe, Approvals:	
Model No. GTM96180-1807-1.8	
Part No./Ordering No. WR9QA3460MICBCMEUR6B	Rev A

PROPRIETARY INFORMATION
PROPRIETARY OF GLOBTEK, INC. ANY REPRODUCTION, DISCLOSURE OR USE OF THIS DRAWING, IN WHOLE OR IN PART, IS HEREBY PROHIBITED EXCEPT AS SPECIFIED IN WRITING BY GLOBTEK, INC. © GlobTek, Inc. 2022 - 2024
guest / 05/27/2024 8:18:06 AM GMT CLONED FROM WR9QA3460MICBCMNAR6B