In Addition to GlobTek Inc.'s renewed ISO9001:2015 - Quality Management System Certification, GlobTek Inc. is now certified to:

ISO13485:2016 - Medical Devices Quality Management System Certification
ISO14001:2015 - Environmental Management System Certification

ISO Certificates are available online at https://www.globtek.com/iso-certificates/

The acceptance of this specification and use of the product described in this document indicates the acceptance and binding of the customer to Globtek TERMS AND CONDITIONS (attached to the end of this document), which supersede all other agreements, terms, and conditions (https://www.globtek.com/terms-and-conditions/).

The purchaser of this product (Customer) agrees that it is their sole responsibility to determine suitability/fitness of the product described in this specification for their application and to take precautions for protection against any hazards attendant to the handling and use of the product.

Footnote:

GlobTek Inc. will not be liable for the safety and performance of these power supplies/battery packs if unauthorized access and repair occurs. End user should consult applicable UL, CSA or EN standards for proper installation instruction.

Limitation of Use:

GlobTek products are intended for use with commercial, medical, and/or industrial equipment only. GlobTek product are not authorized for use as mission critical components in life support hazardous environment, nuclear or aircraft applications without prior written approval from the CEO of GlobTek Inc.
Contents of this document are subject to change without prior notice.

Customer Approval of Specification:

Please approve, sign and send back to GlobTek so we can complete order processing.
A delay in receipt of this form will delay delivery schedule.

Company Name:	Customer P/N:
Quote Number:	Date:
Authorized Representative Name:	Authorized Representative Signature:

PROPRIETARY INFORMATION
PROPRIETARY OF GLOBTEK, INC. ANY REPRODUCTION, DISCLOSURE OR USE OF THIS DRAWING, IN WHOLE OR IN PART, IS HEREBY PROHIBITED EXCEPT AS SPECIFIED IN WRITING BY GLOBTEK, INC. © GlobTek, Inc. 2019 - 2024
guest / 05/25/2024 10:00:58 AM GMT

REVISION HISTORY

REV	DESCRIPTION	SUB	DATE	APPROVED
B1	Add "8" to Package Version, update model from GT-86182-1812-WF2-USB to GT-86182-1812-W2-USB	QA	05/10/2022	QA
B	Update packing to egg crate, master carton dimensions change to 485 x 335 x 240 mm, update pinout configuration to Type "A" USB “JACK”	QA	11/14/2019	QA
A	Initial Release	fclif	10/24/2019	QA

POWER SUPPLY INFORMATION

TYPE	Wall Plug-in
TECHNOLOGY	USB Adaptive Power Supply AC Adaptor
CASE COLOR	GlobTek Black
NAMEPLATE RATED INPUT	100-240V~ , 50/60Hz, 0.6 A
INPUT CONFIG	N. America NEMA 1-15 Fixed
WATTS	18.00
VOLTS OUT	5,9,12
CURRENT OUT (Amps)	3, 2,1.5
BLADE/CORD INCLUDED	FBNA2 Fixed Blades North American 1-15P
BLADE/CORD INSTALLED	FBNA2 :Fixed Blades North American 1-15P
INGRESS PROTECTION	Indoor Use
GROUNDING CONFIGURATION	(F1) Floating output, Class II / double insulated
EFFICIENCY LEVEL	USA DOE Level VI / Eco-design Directive 2009/125/EC, (EU) 2019/1782
OUTPUT CONFIGURATION	N/A mm, N/A/4 Cond, N/A, Type "A" USB “JACK”, integral to power supply enclosure, Ferrite: None, N/A, GT Cord # C0132
CONNECTOR PIN OUT	Pin 1: (+), Pin 2 & 3: N/C, Pin 4: (-)
LABEL SPECS	Standard GT,L-1186
SPECIAL BARCODE LABEL MATERIAL	No
PACK SPEC	WR9HADE3000USBFR6B, WR9HADE3000USBFR6W packing user manual
USER MANUAL	809-PSUQKITUSERMANUAL on A4 paper

PROPRIETARY INFORMATION
PROPRIETARY OF GLOBTEK, INC. ANY REPRODUCTION, DISCLOSURE OR USE OF THIS DRAWING, IN WHOLE OR IN PART, IS HEREBY PROHIBITED EXCEPT AS SPECIFIED IN WRITING BY GLOBTEK, INC. © GlobTek, Inc. 2019 - 2024
guest / 05/25/2024 10:00:58 AM GMT

Notes/Modifications/Customizations (notes in this section supersede the values shown in the standard spec)

DIMENSIONS ARE IN MM UNLESS SPECIFIED OTHERWISE

PROPRIETARY INFORMATION

PROPRIETARY OF GLOBTEK, INC. ANY REPRODUCTION, DISCLOSURE OR USE OF THIS DRAWING, IN WHOLE OR IN PART, IS HEREBY PROHIBITED EXCEPT AS SPECIFIED IN WRITING BY GLOBTEK, INC. © GlobTek, Inc. 2019 - 2024

guest / 05/25/2024 10:00:58 AM GMT

ELECTRICAL SPECIFICATIONS

A) ELECTRICAL SPECIFICATIONS:

01. Input Voltage: Specified 90-264 Vac, Nameplate rated: 100-240Vac
02. Input Frequency: Specified 47-63 Hz, Nameplate rated 50-60Hz
03. Inrush Current: at full load, 25° C, cold start
04. Efficiency: Compliant with Efficiency Level VI and ErP European Commission's Ecodesign Directive (2005/32/EC) / CoC Tier 2 Compliant
05. No Load Standby Power: <0.075W @ 230Vac
06. Line regulation: ±2% At nominal input voltage and full load
07. Total output regulation: ± 5%
08. Output Voltage: Tolerance ± 5%
09. Turn On Delay: 3 Seconds maximum at nominal input Voltage
10. Hold Up Time: 5ms min at nominal Input Voltage
11. Ripple Voltage: 200 mVp-p At 20 MHz, and output parallel with 0.1uF &10uF capacitors to ground Temperature at 25℃, and nominal input voltage
12.Compliant with CLASS A Qualcomm Quick Charge 3.0 and Quick Charge 2.0. 3.6V~12V DC with 18 watts maximum output. Also compliant with BC1.2, APPLE 2.4A., SAMSUNG 2.0A, FCP, SFCP, AFC

Quick Charger 3.0 protocol

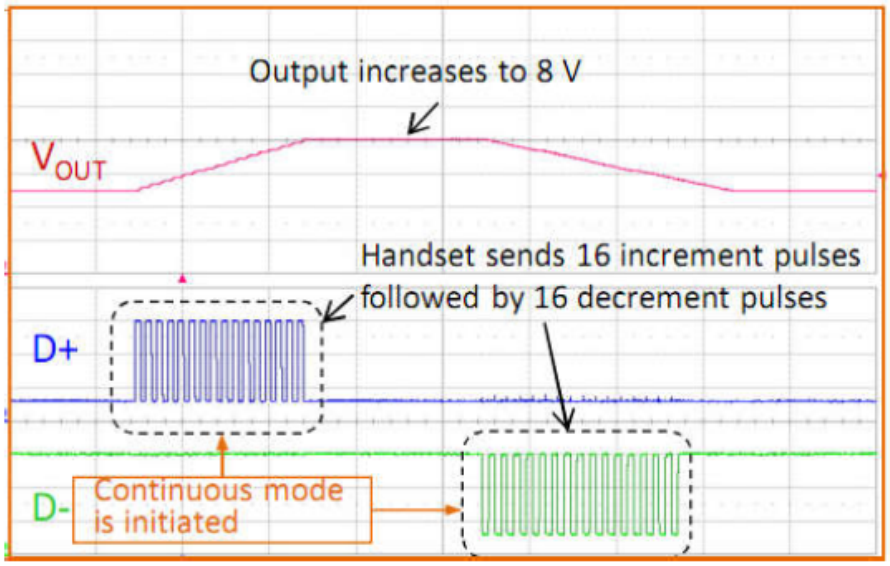

PROPRIETARY INFORMATION
PROPRIETARY OF GLOBTEK, INC. ANY REPRODUCTION, DISCLOSURE OR USE OF THIS DRAWING, IN WHOLE OR IN PART, IS HEREBY PROHIBITED EXCEPT AS SPECIFIED IN WRITING BY GLOBTEK, INC. © GlobTek, Inc. 2019 - 2024
guest / 05/25/2024 10:00:58 AM GMT

B) PROTECTION
01. Over voltage protection: Output shut down and auto restart
02. Short circuit protection: The adapter shall not be damaged by short the DC output to Ground
03. Over Load Protection: Output shut down and auto restart

C) SAFETY
01. HI-POT : Input to output : 3000VAC or 4242VDC 10mA 1 minute
02. Leakage current: 0.25mA maximum, at nominal AC input voltage and frequency
03. ESD: 8KV(air) / 4KV (contact)

D) EMC
01. Emissions, per EN 55032, EN 61000-6-3, EN 61000-6-4
Conducted Emissions: Class B, FCC Part 15, Class B
Radiated Emissions: Class B, FCC Part 15, Class B
02. Line Frequency Harmonics EN61000-3-2, Class A
03. Voltage Fluctuations/Flicker EN61000-3-3
04. Immunity, per EN 55024, EN 61000-6-1, EN 61000-6-2
Static Discharge Immunity EN61000-4-2, 4kV Contact Discharge, 8kV air discharge
Radiated RF Immunity EN61000-4-3, 3V/m 80-1000MHz, 80% 1KHz AM.
EFT/Burst Immunity EN61000-4-4, 1kV/100kHz.
Line Surge Immunity EN61000-4-5, 1kV differential, 2kV common-mode
Conducted RF Immunity EN61000-4-6, 3Vrms, 80% 1KHz AM
Power Frequency Magnetic Field Immunity EN61000-4-8, 1A/m
Voltage Dip Immunity EN61000-4-11, Criteria

E) OTHER:
01. MTBF: 200,000 Hours @ 25°C ambient temperature
02. Operating Temperature: 0°C to 40°C ambient temperature
03. Humidity Operating : 20% to 85%
04. Storage Temperature: -20°C to 60°C
05. RoHS 2: Complies with EU 2011/65/EU and China GB/T26572-2011

F) ENCLOSURE
01. Housing: High impact plastic, 94V0 polycarbonate, non-vented
02. Size: 38.7 (L) * 23.7 (W) * 51.5(H) mm maximum
03. Weight : 48.0 g
04. Markings: Label and/or Pad Printed and/or Molded in the case

TO ADDRESS SYSTEM-LEVEL EMI CONCERNS, FERRITE CHOKES/BEADS MAY BE ADDED/REVISED UPON REQUEST. A SAMPLE KIT OF GLOBTEK’S STANDARD FERRITES IS AVAILABLE UNDER GLOBTEK P/N: EMI-MITIGATION-KIT1

FOR ADDITIONAL INFORMATION, PLEASE READ OUR WHITE PAPER AT: https://r.globtek.info/3QeaqtD

PROPRIETARY INFORMATION
PROPRIETARY OF GLOBTEK, INC. ANY REPRODUCTION, DISCLOSURE OR USE OF THIS DRAWING, IN WHOLE OR IN PART, IS HEREBY PROHIBITED EXCEPT AS SPECIFIED IN WRITING BY GLOBTEK, INC. © GlobTek, Inc. 2019 - 2024
guest / 05/25/2024 10:00:58 AM GMT

INGRESS PROTECTION: Indoor Use

PROPRIETARY INFORMATION

PROPRIETARY OF GLOBTEK, INC. ANY REPRODUCTION, DISCLOSURE OR USE OF THIS DRAWING, IN WHOLE OR IN PART, IS HEREBY PROHIBITED EXCEPT AS SPECIFIED IN WRITING BY GLOBTEK, INC. © GlobTek, Inc. 2019 - 2024

guest / 05/25/2024 10:00:58 AM GMT

3D File Download https://www.globtek.com/file/dl/gt-86182-wwvv-w2-usb_asm.stp

Mechanical drawing

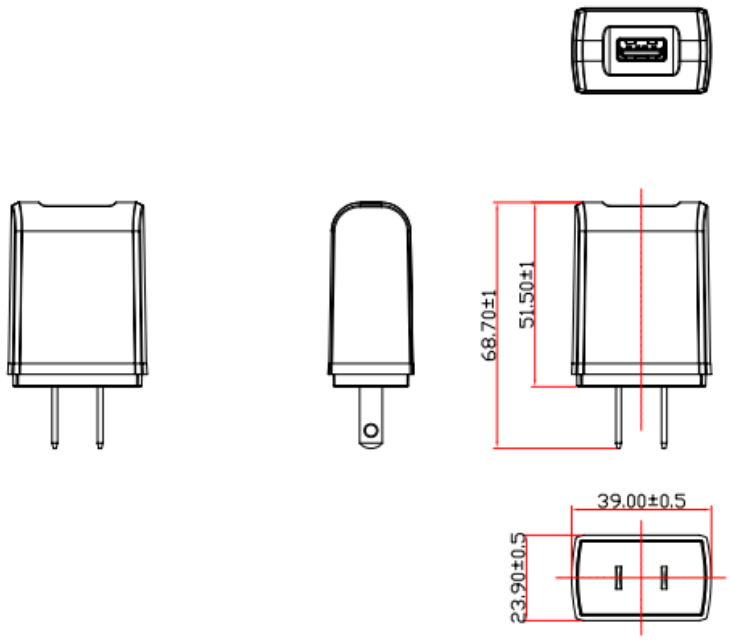

PROPRIETARY INFORMATION

PROPRIETARY OF GLOBTEK, INC. ANY REPRODUCTION, DISCLOSURE OR USE OF THIS DRAWING, IN WHOLE OR IN PART, IS HEREBY PROHIBITED EXCEPT AS SPECIFIED IN WRITING BY GLOBTEK, INC. © GlobTek, Inc. 2019 - 2024

guest / 05/25/2024 10:00:58 AM GMT

DERATING CURVE

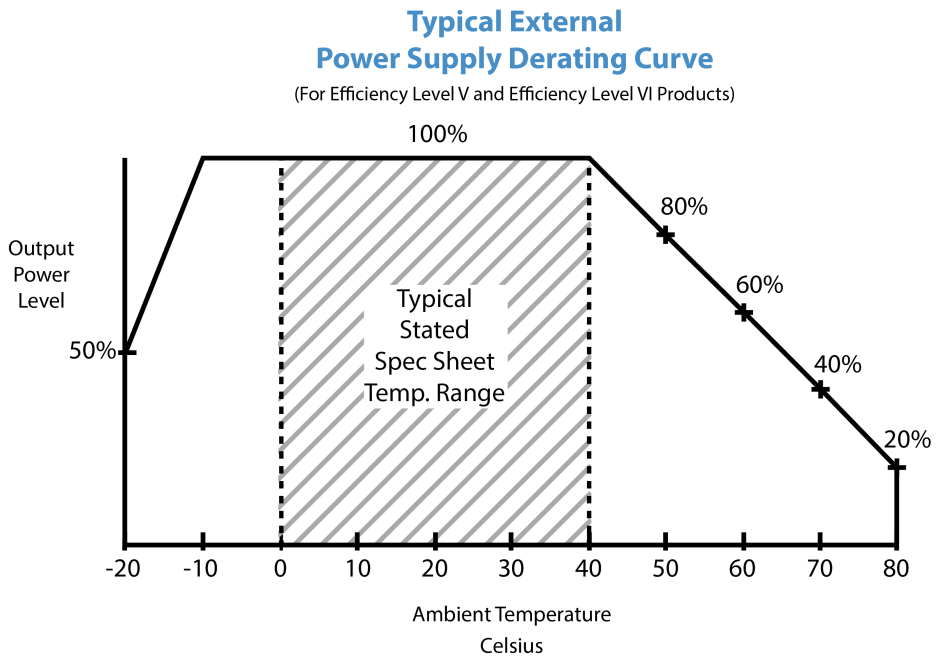

PROPRIETARY INFORMATION

PROPRIETARY OF GLOBTEK, INC. ANY REPRODUCTION, DISCLOSURE OR USE OF THIS DRAWING, IN WHOLE OR IN PART, IS HEREBY PROHIBITED EXCEPT AS SPECIFIED IN WRITING BY GLOBTEK, INC. © GlobTek, Inc. 2019 - 2024

guest / 05/25/2024 10:00:58 AM GMT

INPUT CONFIGURATION

(F1) Floating output, Class II / double insulated

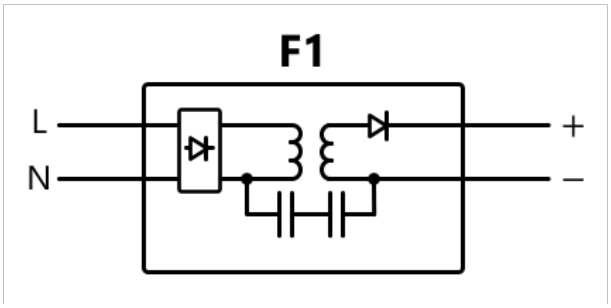

Alternate grounding configurations available upon request.

Blades/Cord Included:FBNA2:Fixed Blades North American 1-15P

Blades/Cord Installed:FBNA2:Fixed Blades North American 1-15P

NEMA 1-15P
NEMA 1-15P, North America Blades, Class II 2 Conductors

All NEMA 1 devices are two-wire non-grounding devices (hot-neutral) rated for 125 V maximum. NEMA 1-15P plugs have two parallel flat blades, 0.25 inches (6.35 mm) wide, 0.06 inches (1.524 mm) thick, 0.625-0.718 inches (15.875–18.256 mm) long, and spaced 0.5 inches (12.7 mm) apart.

PROPRIETARY INFORMATION
PROPRIETARY OF GLOBTEK, INC. ANY REPRODUCTION, DISCLOSURE OR USE OF THIS DRAWING, IN WHOLE OR IN PART, IS HEREBY PROHIBITED EXCEPT AS SPECIFIED IN WRITING BY GLOBTEK, INC. © GlobTek, Inc. 2019 - 2024
guest / 05/25/2024 10:00:58 AM GMT

OUTPUT CORD AND CONNECTOR: USBMT/C0132

ACTUAL CONNECTORS, OVERMOLDS, FERRITES MAY VARY SLIGHTLY FROM THE PICTURE BELOW

CABLE TYPE	N/A
CABLE LENGTH (mm)	N/A
CABLE TOLERANCE (mm)	N/A
WIRE GAUGE (AWG)	N/A
CONDUCTORS	4
HANK DIMENSION (mm)	N/A
CABLE / CONNECTOR OVERMOLD COLOR	N/A
FERRITE TYPE AND DIMENSION	None
FERRITE NUMBER OF TURNS(Definition)	N/A
FERRITE DIMENSION FROM STRAIN RELIEF	N/A
FERRITE DIMENSION FROM PLUG	N/A
PLUG TYPE	Type "A" USB “JACK”, integral to power supply enclosure
OVER MOLD ORIENTATION	PCB Mount Connector
CONNECTOR PIN OUT	Pin 1: (+), Pin 2 & 3: N/C, Pin 4: (-)

ADDITIONAL REQUIREMENTS

Front View

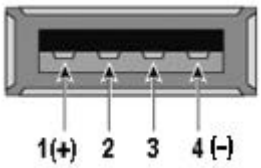

ADDITIONAL OUTPUT PLUG OPTIONS ARE AVAILABLE AT https://www.globtek.com/en/connectors
STANDARD PLUGS AND CONNECTORS CAN BE SEEN ONLINE AT https://www.globtek.com/en/connectors
CALCULATE VOLTAGE REGULATION/DROP WITH OUR ONLINE CALCULATOR: https://www.globtek.com/r2/PtqjjL

PROPRIETARY INFORMATION
PROPRIETARY OF GLOBTEK, INC. ANY REPRODUCTION, DISCLOSURE OR USE OF THIS DRAWING, IN WHOLE OR IN PART, IS HEREBY PROHIBITED EXCEPT AS SPECIFIED IN WRITING BY GLOBTEK, INC. © GlobTek, Inc. 2019 - 2024
guest / 05/25/2024 10:00:58 AM GMT

OUTPUT CONNECTOR HOOK UP

TO ADDRESS SYSTEM-LEVEL EMI CONCERNS, FERRITE CHOKES/BEADS MAY BE ADDED/REVISED UPON REQUEST. A SAMPLE KIT OF GLOBTEK’S STANDARD FERRITES IS AVAILABLE UNDER GLOBTEK P/N: EMI-MITIGATION-KIT1

FOR ADDITIONAL INFORMATION, PLEASE READ OUR WHITE PAPER AT:
https://www.globtek.com/en/technical-articles/ferrite-kit-radiated-emi-suppression-kit-for-globtek-power-supplies-cable-assemblies

PROPRIETARY INFORMATION
PROPRIETARY OF GLOBTEK, INC. ANY REPRODUCTION, DISCLOSURE OR USE OF THIS DRAWING, IN WHOLE OR IN PART, IS HEREBY PROHIBITED EXCEPT AS SPECIFIED IN WRITING BY GLOBTEK, INC. © GlobTek, Inc. 2019 - 2024
guest / 05/25/2024 10:00:58 AM GMT

LABEL:L-1186

LABEL P/N	Standard GT
MATERIAL	Flat Thermal Transfer, Imprintable, Polyester Label and/or Pad Printed and/or Molded, and/or Laser Engraved in the case
BACKGROUND COLOR	Black if housing is Black, White or Silver if housing is White or Gray.
TEXT COLOR	White or Silver if label is Black Background for Black housing. Black if label is White or Silver background and Housing is White or Gray.
LABEL WIDTH (mm)	38.6
LABEL HEIGHT (mm)	22.1
SPECIAL BARCODE LABEL MATERIAL	No

Below is the minimum information which will appear on the label. NOTE: in the logo area additional/actual positioning of symbols and text is subjected to change as per agency updates/requirements or additional model approvals become available.
Regulatory certifications/label markings may be in logo area on the label or molded into the case housing outside the label area.
Information will be shown via label and/or pad printed and/or molded and/or laser engraved in the case. * Date code markings at GlobTek option
.

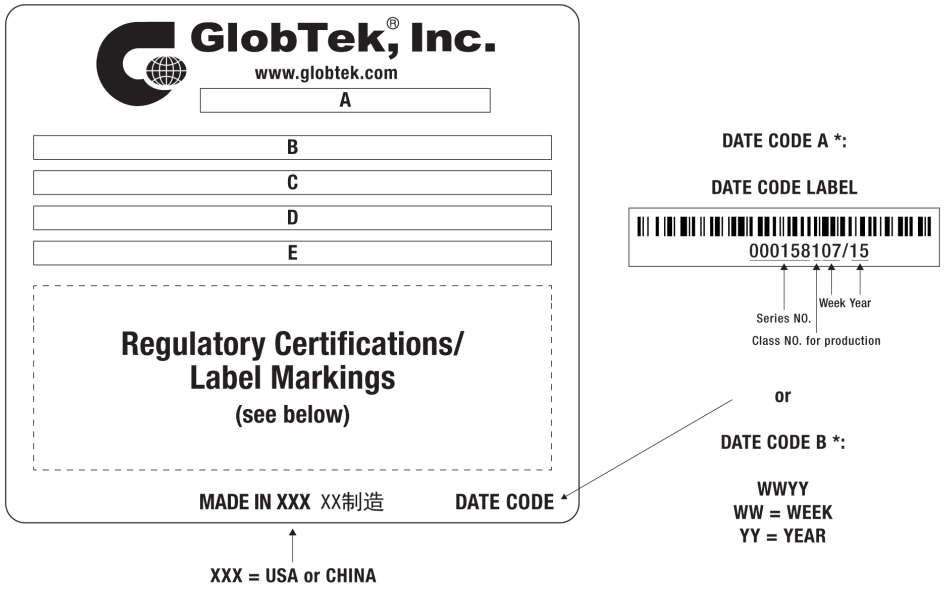

A=ICT/ITE Power Supply
B=P/N: (料号) WR9HADE3000USBFR6B
C=Model (型号) GT-86182-1812-W2-USB
D=Input (输入)100-240V~ , 50/60Hz, 0.6 A
E=Output (输出)5,9,12 V ⎓ 3, 2,1.5 A, 18.00W

PROPRIETARY INFORMATION
PROPRIETARY OF GLOBTEK, INC. ANY REPRODUCTION, DISCLOSURE OR USE OF THIS DRAWING, IN WHOLE OR IN PART, IS HEREBY PROHIBITED EXCEPT AS SPECIFIED IN WRITING BY GLOBTEK, INC. © GlobTek, Inc. 2019 - 2024
guest / 05/25/2024 10:00:58 AM GMT

AGENCY ONLINE DOCUMENTS	http://www.globtek.info/certs/GT-86182-W(F)2-USB/
CE EC-Declaration for Medical	Contact GlobTek for more information
CE EC-Declaration for Industrial/Commercial/ITE	https://cs.globtek.info/ec_declaration_product?id=01t3a000004dtFr&i=5
CE EC-Declaration for Household	Contact GlobTek for more information
UKCA-Declaration for Medical	Contact GlobTek for more information
UKCA-Declaration for Industrial/Commercial/ITE	https://cs.globtek.info/ukca_declaration_product?id=01t3a000004dtFr&i=5
UKCA-Declaration for Household	Contact GlobTek for more information
Morocco SDoC Declaration	https://cs.globtek.info/Morocco_SDoC_Declaration?id=a0O3a00000Lu5ixEAB
RoHS/RoHS3 Declaration	https://www.globtek.com/pdf/rohs_cert/01t3a000004dtFrAAI
REACH Declaration	https://www.globtek.com/pdf/iso_certificates/REACH.pdf
Conflict Minerals Declaration	https://www.globtek.com/pdf/conflict-minerals.pdf
Prop 65 Statement	https://www.globtek.com/prop-65-statement.pdf

IPXY rating is based on 3rd party testing and customers should check suitability and test system level IPXY rating before ordering.

Regulatory Certifications/Label Markings

Below follows a link to the latest regulatory certifications and marks for this specific product. National standards as well as certification schemes are constantly changing and so is the set of certification marks and symbols applicable to this product. Various standards, marks and symbols, and certificates are subject to change at any time without notice.

Additional standards or unique country certifications are available upon request. Please contact Globtek to request a quotation.

LATEST PRODUCT/MODEL CERTIFICATIONS:	https://www.globtek.com/ds/AiGBu5sbaeb/hTvwkbATGNr.html
AGENCY ONLINE DOCUMENTS	http://www.globtek.info/certs/GT-86182-W(F)2-USB/

(F1) Floating output, Class II / double insulated

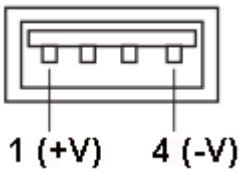

Pin 1: (+), Pin 2 & 3: N/C, Pin 4: (-)

PROPRIETARY INFORMATION
PROPRIETARY OF GLOBTEK, INC. ANY REPRODUCTION, DISCLOSURE OR USE OF THIS DRAWING, IN WHOLE OR IN PART, IS HEREBY PROHIBITED EXCEPT AS SPECIFIED IN WRITING BY GLOBTEK, INC. © GlobTek, Inc. 2019 - 2024
guest / 05/25/2024 10:00:58 AM GMT

PACKAGING

Packing Spec P/N	WR9HADE3000USBFR6B, WR9HADE3000USBFR6W packing user manual
Box Qty	300
Gift Box Size (mm)	Egg crate
Gift Box Color	White
Master Carton Size (mm)	485 x 335 x 240
Master Carton Cubic Volume (m³)	0.04
Master GW (Kg)	16.0 kg
BLADES INCLUDED	FBNA2: Fixed Blades North American 1-15P
BLADE/CORD INSTALLED	FBNA2: Fixed Blades North American 1-15P
USER MANUAL*	809-PSUQKITUSERMANUAL on A4 paper
USER MANUAL WEB LINK	https://www.globtek.com/pdf/809-PSUQKITUSERMANUAL.jpg

* This specification sheet is considered the user manual for all applications. It is expected that the buyer of this product will use it to formulate their own user manual for their end product and a user manual specifically for the power adapter is not usually required. If a user manual is not specifically listed above then none will be provided with this unit.

If specific packaging is required, this section must specify all requirements and note "no exceptions". If this section does not specify packaging, it is subject to change without notice at GlobTek's discretion

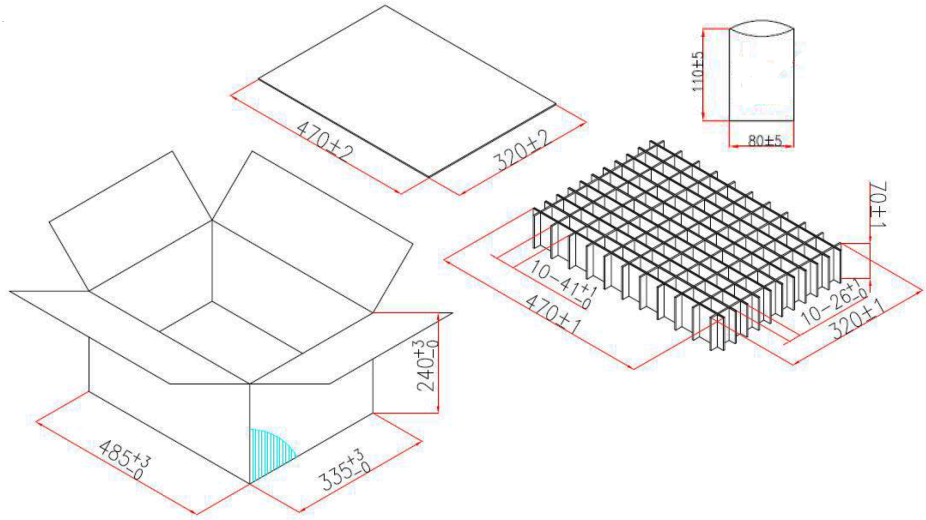

PROPRIETARY INFORMATION
PROPRIETARY OF GLOBTEK, INC. ANY REPRODUCTION, DISCLOSURE OR USE OF THIS DRAWING, IN WHOLE OR IN PART, IS HEREBY PROHIBITED EXCEPT AS SPECIFIED IN WRITING BY GLOBTEK, INC. © GlobTek, Inc. 2019 - 2024
guest / 05/25/2024 10:00:58 AM GMT

INSTRUCTIONS TO THE OEM SYSTEMS ENGINEER

It is the responsibility of the OEM systems engineer to provide the end system user instructions and warnings for the use of this product in the end system.

If an input cord is required for this product, AC Mains voltage should be provided to the power supply by a power supply cord approved to the national standards of the country in which it will be used.

This product is not designed to be repaired. No serviceable parts inside. A blown internal fuse is an indication of catastrophic failure of circuit component(s). If a Failure Analysis is required for a failed power supply/battery charger, please return the damaged unit to GlobTek for an accurate determination of the root cause of the failure.

EMC Compliance of the complete OEM product, including the GlobTek power supply/battery charger needs to be verified by the OEM systems engineer.

PROPRIETARY INFORMATION

PROPRIETARY OF GLOBTEK, INC. ANY REPRODUCTION, DISCLOSURE OR USE OF THIS DRAWING, IN WHOLE OR IN PART, IS HEREBY PROHIBITED EXCEPT AS SPECIFIED IN WRITING BY GLOBTEK, INC. © GlobTek, Inc. 2019 - 2024

guest / 05/25/2024 10:00:58 AM GMT

INSTRUCTION SHEET

PROPRIETARY INFORMATION

PROPRIETARY OF GLOBTEK, INC. ANY REPRODUCTION, DISCLOSURE OR USE OF THIS DRAWING, IN WHOLE OR IN PART, IS HEREBY PROHIBITED EXCEPT AS SPECIFIED IN WRITING BY GLOBTEK, INC. © GlobTek, Inc. 2019 - 2024

guest / 05/25/2024 10:00:58 AM GMT

GlobTek, Inc.
www.globtek.com
186 Veterans Drive,
Northvale, NJ 07647
Tel. (201) 784-1000
Fax (201) 784-0111

Drawing Title: GT-86182-1812-W2-USB, ICT/ITE Power Supply, Efficiency Level: USA DOE Level VI / Eco-design Directive 2009/125/EC, (EU) 2019/1782, Case Color/Style: GlobTek Black, Wall Plug-in, USB Adaptive Power Supply AC Adaptor, Input Rating: 100-240V~ , 50/60Hz, N. America NEMA 1-15 Fixed, , Output Rating: 18.00W, 5,9,12V@3, 2,1.5A, Pin Out: Pin 1: (+), Pin 2 & 3: N/C, Pin 4: (-), Output Configuration: N/A mm, N/A/4 Cond, N/A, Type "A" USB “JACK”, integral to power supply enclosure, Ferrite: None, N/A, GT Cord # C0132, Blades/Input Cord: Fixed Blades North American 1-15P, Approvals:

Model No. GT-86182-1812-W2-USB

Part No./Ordering No. WR9HADE3000USBFR6B

Rev B1

PROPRIETARY INFORMATION
PROPRIETARY OF GLOBTEK, INC. ANY REPRODUCTION, DISCLOSURE OR USE OF THIS DRAWING, IN WHOLE OR IN PART, IS HEREBY PROHIBITED EXCEPT AS SPECIFIED IN WRITING BY GLOBTEK, INC. © GlobTek, Inc. 2019 - 2024
guest / 05/25/2024 10:00:58 AM GMT