LEMO®

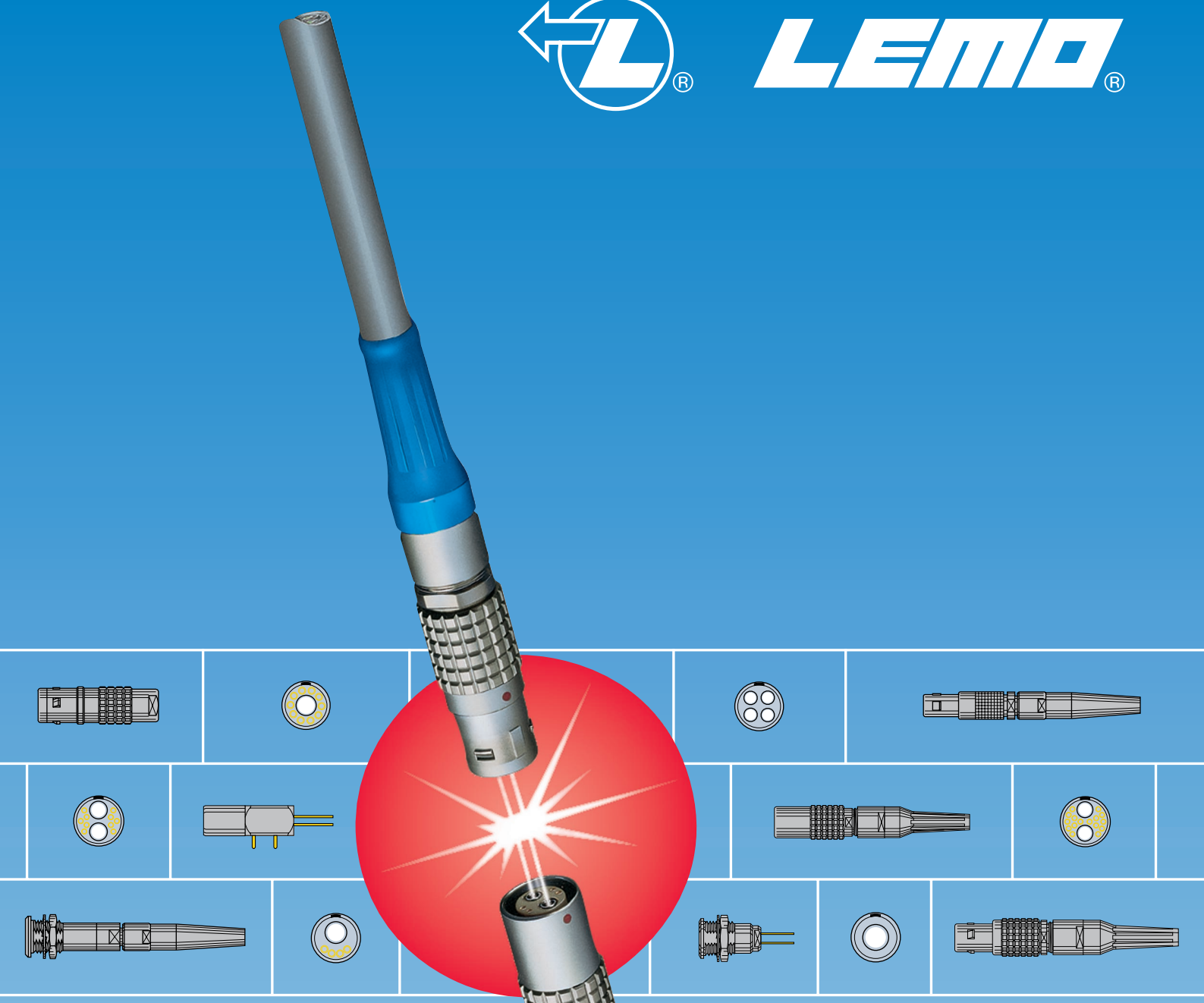

Single, Multi & Hybrid

Fibre Optic Connectors

5

Dear Customers,

As far as data transmission is concerned, the superior characteristics of fibre optics compared to electrical cables are clearly recognised today.

The advantages of fibre optics include a transmission capacity 10 times greater than that of conventional coaxial cables, in only one tenth of the size. The reduced weight and space requirements make handling and line installation much easier. Furthermore, fibre optics is characterized by low signal amplitude loss, no susceptibility to electromagnetic interference, and an absence of interference between neighbouring lines. It also offers greater security due to the difficulty of intercepting optical signals.

The growing number of applications is more and more varied, and the annual growth rate of fibre optics is greater than 10%. Current applications of fibre optics include: telemetry, process control, data transmission, cable and closed circuit television, as well as laser signal transmission in medical applications.

However, most systems equipped with fibre optics also require simultaneous electrical energy for control operations and power supply. Current practice involves the use of separate electrical and fibre optic connectors.

The new technology developed by LEMO greatly simplifies this practice by combining electrical and fibre optic signals in a single connector.

LEMO can now offer you a full range of mixed electrical/fibre optic connectors for singlemode or multimode transmission. This product range is available with metal or plastic outer shells, as well as in a watertight version.
The range is completed by the addition of a single channel fibre optic connector series. All LEMO fibre optic connectors use a plug and socket push-pull self-latching connection system, obviating the need for plug to plug adaptors. This is a major advantage of the LEMO technology over its competitors.

With the aim of providing the best possible answers to your fibre optic needs, LEMO has established an important research and development facility to provide quick and effective solutions to your design requirements.

LEMO ISO 9001 certified has been improving its “quality culture” with the aim of reaching TQM. Offering zero defect products with due regard to the environment and meeting delivery requirements, are LEMO’s two main concerns.

Certified Quality System SQS ISO 9001
Reg. No. 10472 - 03

LEMO SA
General Management

No reproduction or use without express permission of editorial or pictorial content, in any manner.
LEMO reserve the right at all times to modify and improve specifications without any notification.

Printed in Switzerland, April 2002 © LEMO SA
Pdf updated, May 2024

Table of Contents

General Production Programme ..... **page 3**
Main Characteristics and Types **3**
Series and Types **4**
LEMO's Push-Pull Self-Latching Connection System **5**
Fibre Optic Connectors Production Programme **6**
Introduction **7**

General Characteristics
Selection of the LEMO Fibre Optic Contacts, Series and Contact Configurations 8
Acceptable Cable Diameter 9
Selection of Electrical Contact Types 9
Part Numbering System 10

00 Series
Interconnections 13
Model Description 13
Part Section Showing Internal Components 14
Technical Characteristics 14
Alignment Key and Polarized Keying Systems 14
Part Number Example 15
Models - Series 16
Fibre Type 17
Housing, Cable Fixing Type, Bend Relief, Tooling, Panel Cut-Outs 18

0B Series
Interconnections 21
Model Description 21
Part Section Showing Internal Components 22
Technical Characteristics 22
Alignment Key and Polarized Keying Systems 22
Part Number Example 23
Models - Series 24
Fibre Type, Housing 25
Bend Relief, Tooling, Panel Cut-Outs 26

0K Series
Interconnections 29
Model Description 29
Part Section Showing Internal Components 30
Technical Characteristics 30
Alignment Key and Polarized Keying Systems 30
Part Number Example 31
Models - Series 32
Fibre Type 32
Housing, Bend Relief, Tooling, Panel Cut-Outs 33

2B to 5B Series
Interconnections 37
Model Description 37
Part Section Showing Internal Components 38
Technical Characteristics 38
Alignment Key and Polarized Keying Systems 38
Part Number Example 39
Models - Series 40
Tooling, Panel Cut-Outs 45

2K to 5K Series
Interconnections 47
Model Description 47
Part Section Showing Internal Components 48
Technical Characteristics 48
Alignment Key and Polarized Keying Systems 48
Part Number Example 49
Models - Series 50
Tooling, Panel Cut-Outs 53

Types (2B-5B and 2K-5K series) 55
Housing, Electrical Contact (2B-5B and 2K-5K series) 58
Collets (2B-5B and 2K-5K series) 59
Variant (2B-5B and 2K-5K series) 61

Table of Contents

3K.93C Series ..... Interconnections 65
Model Description 65
Part Section Showing Internal Components 66
Technical Characteristics 66
Alignment Key and Polarized Keying Systems 67
Part Number Example 67
Models - Series 68
Types 71
Fibre Optic Contact, Accessories 72
Tooling 74
Fibre Optic Tooling, Crimping Tools for Electrical Contacts 75
Termination Instruction, Panel Cut-Outs 76

F1 Fibre Optic Contact ..... Introduction, Part Section Showing Internal Components 77
Technical Characteristics, Part Number Example 77
Model - FO Contact Type, Fibre Type 78

F2 Fibre Optic Contact ..... Introduction, Part Section Showing Internal Components, Technical Characteristics 79
Part Number Example, Model - FO Contact Type, Fibre Type 80
Cable Fixing Type, Accessory 81
Insertion and Extraction of the Fibre Optic Contacts 82

Accessories ..... Insulators, Crimp Electrical Contacts 85
Caps 86
Bend Reliefs 91
Insulating Washers, Double Panel Washers 93
Locking Washers, Tapered Washers, Hexagonal Nuts 94
Notched Nuts, Conical Nuts, Round Nuts 95
Earthing Washers 96

Tooling ..... Spanners 97
Pliers, Taps 99
Crimping Tools for Electrical Contacts, Positioners, Turrets 100
Extraction Tools, Retention Testing Tools 101

Tools for type C Coaxial Contacts Crimping Tool, Dies, Extractors 102

Fibre Optic Tooling ..... Complete Workstation 103
Crimping Tool, Epoxy Curing Jig, Epoxy Curing Oven, Polishing Tool 104
Fibre Inspection Microscope, Microscope Adaptor, Extractor 105
F2 Contact Alignment Device, F4 Contact Alignment Device 105
Cleaning Tool, Cleaning Kit 106

Technical Characteristics ..... Outer shell 107
Insulator 108
Fibre Optic Contacts 109
Electrical Contact 112
Cable Fixing 115
Preferred Fibre Optic Cable Types 118
Product safety notice 119

Product safety notice & disclaimers

Please read and follow all instructions specified on the last page or on our website carefully and consult all relevent national and international safety regulations for your application. Improper handling, cable assembly, or wrong use of connectors can result in hazardous situations.

LEMO products and services are provided “as is.” LEMO makes no warranties or representations with regard to LEMO product & services or use of them, express, implied or statutory, including for accuracy, completeness, or security.

In no event shall LEMO be liable for any direct, indirect, punitive, incidental, special consequential damages, to property or life, whatsoever arising out of or connected with the use or misuse of LEMO’s products.

General Production Program

Connectors

Unipole from 2 to 150 Amps
Coaxial 50 and 75 Ω
Coaxial 50 Ω (NIM-CAMAC)
Coaxial 50 Ω for frequency until 12 GHz
Multicoaxial 50 and 75 Ω
Multipole from 2 to 106 contacts
High Voltage 3, 5, 8, 10, 15, 30 and 50 kV cc
Multi High Voltage 3, 5, and 10 kV cc
Triaxial 50 and 75 Ω
Quadrax
Hybrid: High Voltage (LV) + Low Voltage (LV)
Hybrid: Coax + LV
Hybrid: Triax + LV
Thermocouple
Multithermocouple
- Fibre optic single-mode
- Fibre optic multi-mode
- Hybrid: fibre optic + LV

Hybrid: fibre optic + coax + LV
Fluidic
Multifluidic
Hybrid: fluidic + LV
Subminiature
Miniature
Printed circuit board
Remote handling
Watertight
Sealed (pressure and/or vacuum)
- With plastic outer shell
- With aluminium outer shell
- With stainless steel outer shell

With special radiation resistant insulator material
With screw thread coupling for very high pressure
With microswitch

Patch Panels

For audio-mono applications: triax
For audio-mono applications: 3 contacts
For audio-stereo applications: quadrax
For audio-stereo applications: 6 contacts
For video applications: coax 75 Ω

Patch Panels

For video HDTV applications: 3 coax 75 Ω + 2LV
For fibre optic applications

Adaptors

For BNC, C, UHF, N, CINCH, GEN-RADIO connectors
For TNC, SMA connectors

Accessories

- Insulator for crimp contacts
- Crimp contacts

Coaxial contacts
Triaxial contacts
- Fibre optic contacts
- Fibre optic ferrules
- Caps and bend reliefs
- Insulating washers
- Double plastic panel washers
- Locking washers
- Tapered washers
- Hexagonal nuts
- Conical nuts
- Round nuts
- Notched nuts
- Earthing washers

Lead-through with cable collet

Tooling

- Spanners
- Spanners for assembling plug
- Assembly tool
- Pliers
- Tap
- Crimping tools
- Positioners
- Crimping dies
- Extractors
- Insertion testing tool for crimp contacts
- Fibre optic termination workstation
- Fibre optic polishing tools

On request

Filtered connectors
- Connectors with special alloy housing

Hybrid special connectors
- Assembly onto cable

- Connectors, accessories and tools found in this catalogue.

Main Characteristics and Types

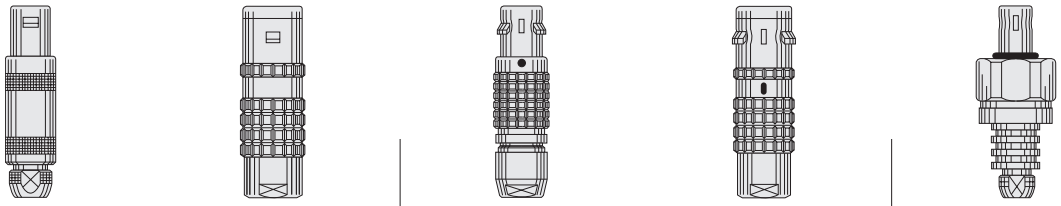

	STANDARD	WATERTIGHT	KEYED	KEYED WATERTIGHT	SCREW
Series	01 (Minax) 00 (NIM-CAMAC) 00 (unipole) 05 / R0 0S to 6S 0A / 4A 1D / 2C 1Y-3Y-6Y	0E to 6E 3T 4M	00 (multipole) 0B to 5B 2G/5G	0K to 5K 0F to 5F 2N to 5N	03 0V to 5V 0W to 5W 2U to 5U
Latching	Push-Pull				Screw
Key	Stepped insulator (Half-Moon)		Key (G) or other key-way code		Key (G) or stepped insulator (Half-Moon)
Shell	Metal or plastic	Metal	Metal or plastic	Metal	Metal
Insulator	Hermaphroditic or cylindrical		Cylindrical		Hermaphroditic or cylindrical
Contact	Solder or print		Solder, crimp or print		Solder (crimp or print)

Series and Types

	Series	Types																		
		Unipole	Coaxial 50 Ω	Coaxial 75 Ω	Multipole	High Voltage	Triaxial 50 Ω	Triaxial 75 Ω	Quadrax	Multi HV	Multi Coaxial	Hybrid HV+LV	Hybrid Coax+LV	Hybrid Triax+LV	Fibre Optic	Multi FO	Hybrid FO+LV+…	Fluidic	Multi fluidic	Hybrid fluidic+LV	Thermocouple
Standard	01		●																		
	00	●	●				●											●			
	05					●															
	C1		●																		
	0A		●	●																	
	0S	●	●		●	●	●														●
	1S	●	●	●	●	●	●														●
	2S	●	●	●	●	●	●	●				●									●
	3S	●	●	●	●	●	●	●		●		●	●								
	4S	●	●	●	●	●	●	●		●	●	●	●								
	5S	●	●	●	●					●	●	●	●								
	6S				●						●		●								
	1D								●												
	2C		●		●																
	4A							●													
	1Y-3Y-6Y					●															
Watertight	0E	●	●		●	●	●														●
	1E	●	●	●	●	●	●														●
	2E	●	●	●	●	●	●	●				●									●
	3E	●	●	●	●	●	●	●		●		●	●								
	4E	●	●	●	●		●	●				●	●								
	5E	●			●					●	●	●	●								
	6E				●						●		●								
	3T			●				●													
	4M						●	●													
Keyed	00				●										●						
	0B				●										●			●			●
	1B				●							●					●				●
	2B				●					●	●	●	●	●			●			●	●
	3B				●						●	●	●	●		●	●		●	●	
	4B				●					●	●	●	●	●		●	●		●	●	
	5B				●					●	●	●	●	●		●	●				
	2G				●																
	5G									●											
Keyed watertight	0K				●										●			●			●
	1K				●							●					●				●
	2K				●						●	●	●	●			●			●	●
	3K			●	●						●	●	●	●		●	●		●	●	
	4K				●					●	●	●	●	●		●	●		●	●	
	5K				●					●	●	●	●	●		●	●				
	FF to 5F				●											●	●				
	2N to 5N	●	●	●	●		●	●								●	●				
Screw	03		●		●																
	0V	●	●		●		●														●
	1V	●	●	●	●		●														●
	2V	●	●	●	●		●	●				●									●
	3V	●	●	●	●		●	●		●		●	●								
	4V	●	●	●	●		●	●				●	●								
	5V	●			●					●	●	●	●								
	0W to 5W				●						●	●	●	●		●	●			●	●
	2U to 5U				●										●	●	●				
	MM to 5M				●											●	●				

Note: ● = included in this catalogue, ● = available but not included in this catalogue.

LEMO's Push-Pull Self-Latching Connection System

This self-latching system is renowned worldwide for its easy and quick mating and unmating features. It provides absolute security against vibration, shock or pull on the cable, and facilitates operation in a very limited space.

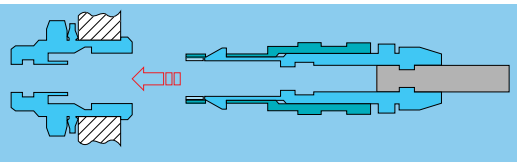

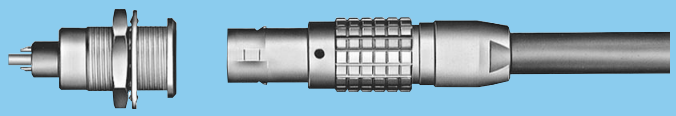

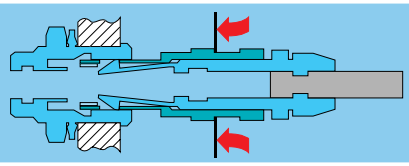

The LEMO Push-Pull self-latching system allows the connector to be mated by simply pushing the plug axially into socket.

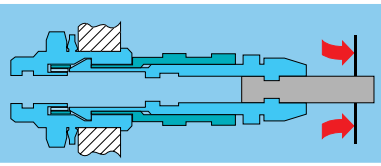

Once firmly latched, connection cannot be broken by pulling on the cable or any other component part other than the outer release sleeve.

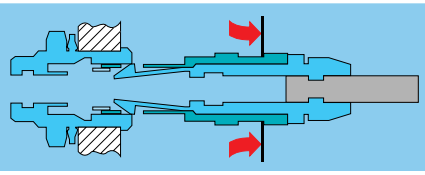

When required, the connector is disengaged by a single axial pull on the outer release sleeve. This first disengages the latches and then withdraws the plug from the socket.

Mechanical latching characteristics

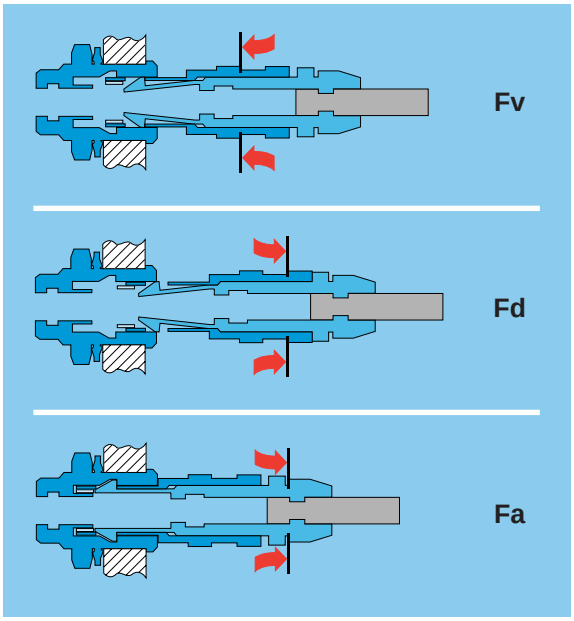

00, B series

Force (N)	Series					
	00	0B	2B	3B	4B	5B
Fv	9	10	15	17	39	48
Fd	7	8	12	14	38	38
Fa	120	250	300	550	700	800

K watertight series

Force (N)	Series				
	0K	2K	3K	4K	5K
Fv	14	20	32	65	85
Fd	9	13	25	40	60
Fa	250	400	550	700	800

Notes: Forces were measured on outer shells **not fitted with contacts**.

F_v: average latching force

F_d: average unmating force with axial pull on the outer shell

F_a: average pull force with axial pull on the collet nut

Fibre Optic Connectors Production Program

The production program is divided into 12 series of connectors. Their main characteristics and applications are shown below.

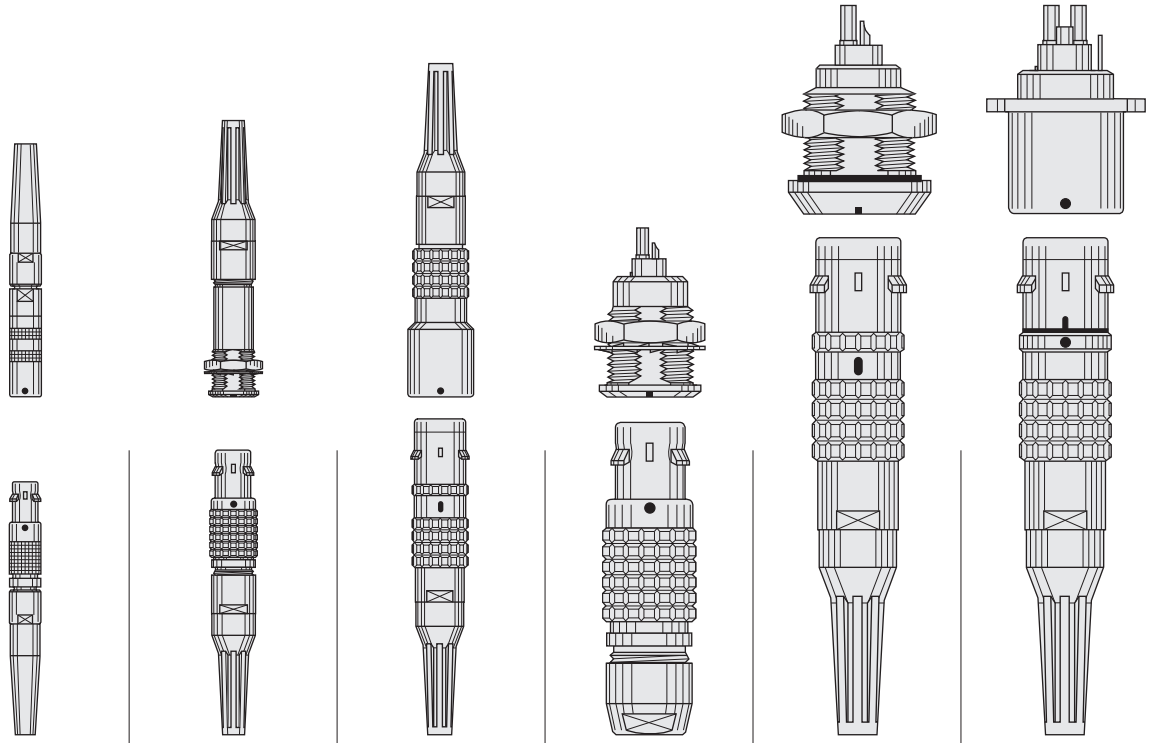

Series	00	0B	0K	1B to 5B	1K to 5K	3K.93C
Latching	Push-Pull					With «W» key-way
Shell	Metal			Metal or plastic	Metal	
Feature	Miniature		Watertight to IP68		Watertight to IP68	Watertight to IP68
Cable Construction	Single fibre			Multi fibre or Hybrid optical/electrical		Hybrid HDTV optical/electrical
Contact Type	**F4**	**F3**	**F2**	**F1**	**F2**	**F2**
Fibre Type	Single-mode or Multi-mode fibres ≤ 100/140µm	Multi-mode fibres ≥ 100/140µm	Single-mode or Multi-mode fibres ≤ 100/140µm	Multi-mode fibres ≥ 100/140µm	Single-mode or Multi-mode fibres ≤ 100/140µm	Single-mode or Multi-mode fibres ≤ 100/140µm
Mean insertion loss	0.10 dB (s/m) 0.25 dB (m/m)	1.13 dB	0.10 dB (s/m) 0.25 dB (m/m)	1.13 dB	0.10 dB (s/m) 0.25 dB (m/m)	0.10 dB (s/m) 0.25 dB (m/m)
Ferrule Material	Ceramic	Ceramic or metal	Ceramic	Ceramic or metal	Ceramic	Ceramic
Interface Type	Spherical with physical contact of the fibre end face (PC)	Spherical, non-contact with controlled gap of the fibre end face	Spherical with physical contact of the fibre end face (PC)	Spherical, non-contact with controlled gap of the fibre end face	Spherical with physical contact of the fibre end face (PC)	Spherical with physical contact of the fibre end face (PC)
Page	11 to 18	19 to 26	27 to 34	35 to 46	47 to 54	63 to 76

Introduction

This catalog gives the complete description of LEMO fibre optic connectors. Our manufacturing program has been extended to 12 series with specific mating and environmental characteristics.

Each series includes a wide variety of plugs, sockets or housings for electro-optic devices available in a large choice of combinations of fibre optic and electrical contacts within the same housing.
Shells are adapted to all round cables to a maximum diameter of 25 mm.

LEMO connectors feature ceramic or metal ferrules for the fibre optic contacts to provide alignment for both single-mode and multi-mode fibres.
They are manufactured to the highest precision in order to ensure optimum optical performances even in the most severe applications.

Numerous accessories as well as a complete range of tools for fibre optic termination, are available.

The 00 Series

The characteristic feature of this connector series is the small size requiring minimum mounting space requirement.
Connectors are suitable for use with single fibre cables fitted with single-mode or multi-mode fibres.

The 0B Series

A simple and proven construction with ceramic or metallic ferrules in a fibre optic contact primarily intended for use with large size multi-mode fibres ranging from 140 to 1500 micron external diameters.

The 0K Series

This series is watertight (IEC 60529/IP 66-IP 68) and is ideal for use in harsh environments.
It uses the standard LEMO F2 fibre optic contact which has undergone extensive mechanical, optical and environmental testing.
Connectors are suitable for use with single fibre cables fitted with single-mode or multi-mode fibres.

The 1B to 5B Series

These connectors series range from 2B to 5B, and have been designed to work with LEMO F1 or F2 type fibre optic contacts. The F7 fibre contacts can be used with series size 1B to 5B. They are suitable for use with multi fibre or hybrid fibre optical/electrical cables fitted with single-mode or multi-mode fibres up to 1500 micron in diameter.
The connectors offer a variety of features:
– alignment key preventing all errors in alignment;
– polarized keying system, the various keying alternatives prevent unwanted cross mating of otherwise similar connectors;
– higher contact density; and
– possible use of crimp contacts to reduce cable assembly time.

The 1K to 5K Series

This product family includes the 1K to 5K series, and are watertight (IEC 60529/IP 66-IP 68) available in the same types as the 1B to 5B series. The connectors are ideal for use in harsh environments.

The video HDTV 3K.93C Series

This range of high performance fibre optic camera connectors has been developed to meet the needs of the new generation of digital TV cameras. Contact configuration includes 2 fibre optic contacts for single-mode fibres, 2 electrical contacts for power and 2 electrical contacts for signal. This series conforms to the Japanese ARIB technical report BTA S-1005B, to the ANSI/SMPTE 304 M-1998 and 311M-1998 standards and to the European EBU Technical Recommendation R100-1999.
Connectors are qualified for use in UL approved equipment such as those specified in UL 1419 «Professional Video and Audio Equipment»

CE marking CE

CE marking CE means that the appliance or equipment bearing it complies with the protection requirements of one or several European safety directives.
CE marking CE applies to complete products or equipment, but not to optical/electromechanical components, such as connectors.

Propagation of Light and Fibre Type

The diagrams show the typical transmission characteristic of single-mode and multi-mode fibres.
In multi-mode fibres, the effect of modal dispersion causes a spread in the received pulse and therefore limits the bandwidth of the transmission system (Fig. 1).

If the fibre core is < 10 µm and the wavelength is ≥ 1300 nm, then only the fundamental mode is transmitted in the single-mode fibre (Fig. 2).

The dispersion effects of single-mode fibres are very small and consequently they offer higher bandwidths when compared with multi-mode fibres. However, multi-mode fibres are usually ideal for short distance applications because they require less input optical power and can be driven by simple low cost LEDs.

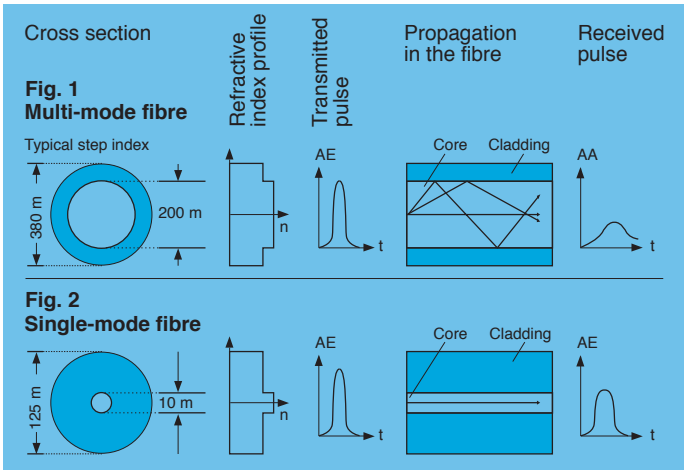

General Characteristics

Selection of the LEMO Fibre Optic Contacts

In order to ensure the highest technical performance and to provide the optimum solution for a diversity of applications, LEMO has developed four types of fibre optic contacts; designated **F1**, **F2**, **F3**, and **F4**. These contacts are designed to operate with single fibre, multi fibre, and hybrid fibre optical/electrical cable constructions and cater to single and multi-mode fibres from 9/125 to 1500 μm diameter.

The choice of fibre optic contacts depends upon the following criteria:
– Cable construction (single fibre, multi fibre, hybrid optical/electrical)
– Fibre type (single-mode or multi-mode).

The table below shows the suitability of each contact type with different fibres and cables.
Note that the multi fibre cable can contain many types of optic fibres or a group of fibres and electrical cables leading to hybrid optical/electrical connectors.

	Contact type	Cable Structure		Fibre Types and dimensions		
			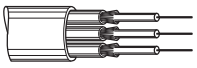			
		single fibre	multi fibre or hybrid	single-mode	multi-mode ≤ 100/140µm	multi-mode ≥ 100/140µm
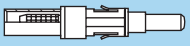	F1		■			■
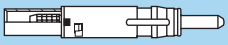	F2	■	■	■	■	
	F3	■				■
	F4	■		■	■	

Series and contact configurations

Single and Multi F.O.

Number of F.O. contacts	Series 00	0B	0K	2B-2K	3B-3K	4B-4K	5B-5K	3K.93C
1	●	●	●					
2					●			
4						●		
10							●	
14							●	

Note: ● = available contact configuration

Hybrid F.O. + L.V.

Number of F.O. contacts	Number of L.V. electrical contacts	Series 00	0B	0K	2B-2K	3B-3K	4B-4K	5B-5K	3K.93C
1	2, 4, 6 or 10				●				
1	22					●			
2	4, 6, 10 or 16					●			
2	6, 7, 12, 16 or 18						●		
3	6 or 12						●		
3	10							●	
4	5 or 9						●		
9	3							●	

Hybrid F.O. + L.V. + H.V.

Number of F.O. contacts	Number of L.V. H.V. electrical contacts	Number of electrical contacts	Series 00	0B	0K	2B-2K	3B-3K	4B-4K	5B-5K	3K.93C
2	2	2								●
6	2	4							●	
12	1	2							●	

Hybrid F.O. + L.V. + Coax

Number of F.O. contacts	Number of L.V. electrical contacts	Number of coax electrical contacts	Series 00	0B	0K	2B-2K	3B-3K	4B-4K	5B-5K	3K.93C
1	6	1					●			
1	16	1					●			
2	–	2						●		
2	6	1						●		

Acceptable cable diameter

Cable ø (mm)	Series											
	00	0B	0K	2B	3B	4B	5B	3K.93C	2K	3K	4K	5K
min	0.25	2.5	2.5	1.5	4.1	5.1	9.6	8.3	3.6	3.6	3.6	3.6
max	3.00	4.4	3.0	9.7	11.7	16.0	25.0	16.5	6.5	9.0	13.5	23.5

Selection of electrical contact types

Solder contacts

The conductor bucket of these contacts is machined at an angle to form a cup into which the solder can flow.

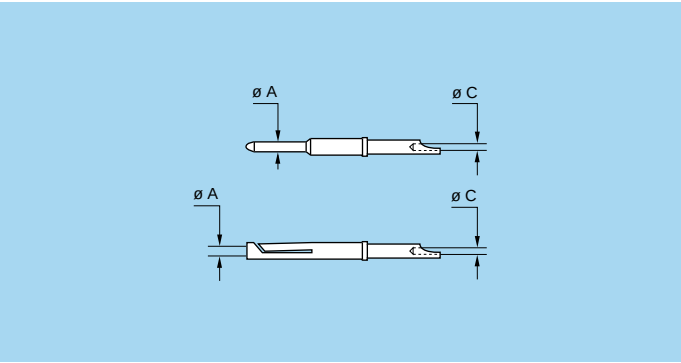

Contact		Conductor			
		Solid		Stranded	
ø A (mm)	ø C (mm)	AWG max.	Section max (mm²)	AWG max.	Section max (mm²)
0.7	0.80	22	0.34	22[1)]	0.34
0.9	0.80	22	0.34	22[1)]	0.34
1.3	1.00	20	0.50	20[1)]	0.50
2.0	1.80	14	1.50	16	1.50
4.0	3.70	10	6.00	10	6.00

Note: [1)] For a given AWG, the diameter of some stranded conductor designs is larger than the solder cup diameter. Make sure that the maximum conductor diameter is smaller than ø C.

Crimp contacts

The crimp contacts are designed to be crimped with the standard four-indent method according to MIL-C-22520F, class 1, type 1.

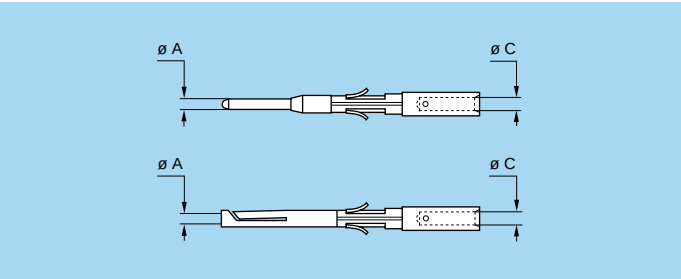

Contact		Conductor stranded				F_r (N)
		AWG stranded		Section (mm²)		
ø A (mm)	ø C (mm)	min.	max.	min.	max.	
0.7	0.80	26	22[1)]	0.140	0.34	22
0.9	1.10	24	20	0.250	0.50	30
1.3	1.40	20	18	0.500	1.00	40
	1.90[2)]	18	14	1.000	1.50	
1.6	1.90	18	14[1)]	1.000	1.50	50
2.0	2.40	16	12[1)]	1.500	2.50	65

Note:
[1)] For a given AWG, the diameter of some stranded conductor designs is larger than the solder cup diameter. Make sure that the maximum conductor diameter is smaller than ø C.
[2)] These contacts are special with an oversized crimp bucket and can be used only with the series 3K.93C.

Note: Fr = mean contact retention force in the insulator (according to IEC 60512-8 test 15a).
Crimp contacts can also be supplied with a reduced crimp barrel. Please consult factory or our Unipole/Multipole catalog.

A detailed range of conductor dimensions that can be crimped into LEMO contacts is given in the table above. See also the section on tooling (pages 97 to 106).

Coaxial contacts

The type C coaxial contact is removable and fixed in place by clips. Cable attachement is made by crimping. The square form is used to captivate center conductor and hexagonal crimping method for the cable shield.
A detailed range of coaxial cable that can be installed into our type C coaxial contact is given in the table below.

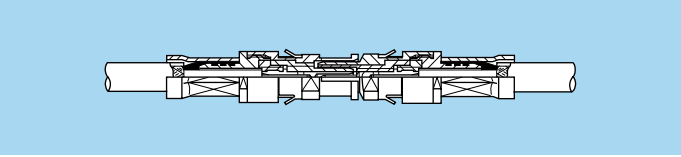

Group	Type
1	RG.174A/U, RG.188A/U, RG.316/U
2	RG.178B/U, RG.196A/U
3	RG.179B/U, RG.187A/U

Part Numbering System

Series

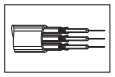
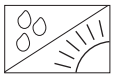

Connectors series and size should be selected according to the type of fibre, single-mode or multi-mode, cable structure and dimensions.

See table on p. 6 (fibre optic connectors production program) and p. 8 (selection of the LEMO fibre optic contacts).

Selection should also consider the environmental requirements such as indoor or outdoor applications etc…

See again table on p. 6 (fibre optic connector production program).

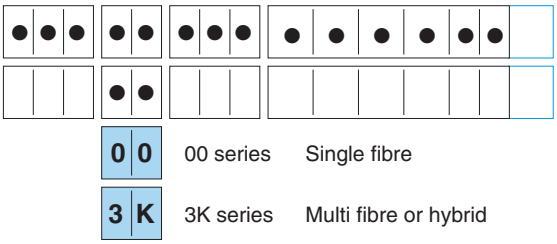

Type

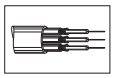

Contact arrangements (type) within a given series can be defined according to the fibre size for single fibre connector or cable design for multi fibre or hybrid.

See table on p. 8 (series and contact configuration) and type table in each series.

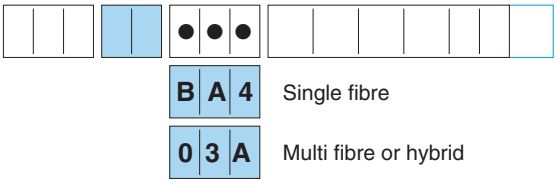

Model

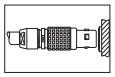
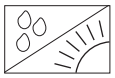

Models within a given series can be selected according to the application and the panel mounting conditions.

See models available in each series.

⚠ When available make the right key-way selection.

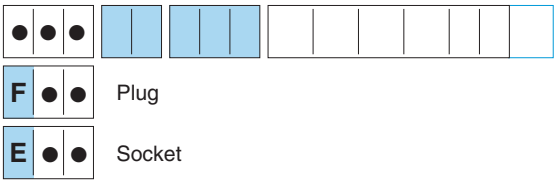

Housing material



The housing material and surface finish depends on the environmental requirements.

See material available in each series.

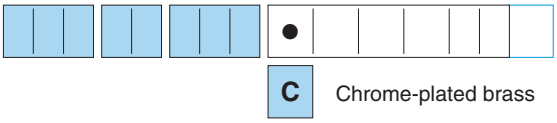

Ferrule or insulator material

The ferrule material should be selected according to the availability in each series.

For multi fibre or hybrid connector the insulator material is PEEK

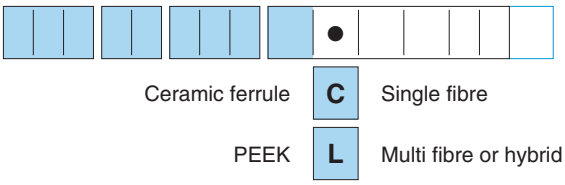

Contact

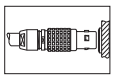

The fibre optic contact should be indicated according to the model.
The electrical contact type can be selected according to the model (male or female), or conductor retention (solder or crimp).

⚠ Verify again that contact size matches with the conductor diameter.

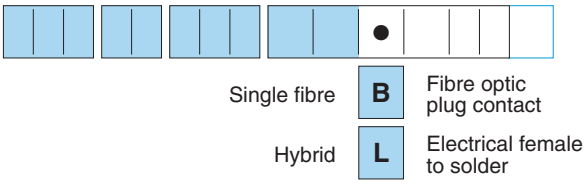

Collet

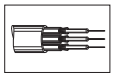

Different clamping systems are proposed for various cable diameters.

See collet type for each series and cable diameter.

⚠ Not applicable for sockets E●●.

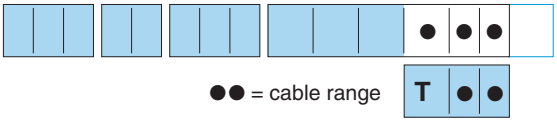

Variant

Some variants are available according to special requirements of the application (bend relief collet nut, etc…).

See variant in each series.

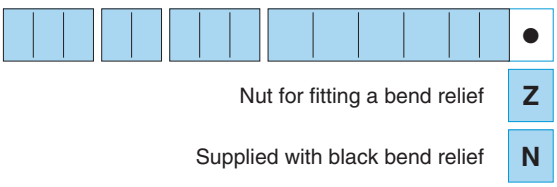

 = Environment

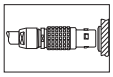 = Application

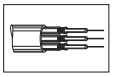 = Cable

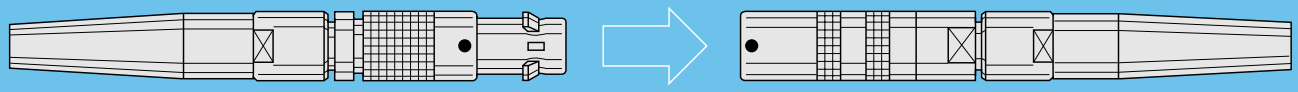

00 SERIES

00 Series

The 00 series connectors are fitted with LEMO **F4** type fibre optic contacts.
The main features of this series are as follows:
– Security of the LEMO Push-Pull self-latching system
– Minimum mounting space requirement (high packing density)
– Protection against accidental contamination or damage to the fibre end face because the ferrules do not protrude outside of the connector shell
– The alignment key (G, B) ensures excellent repeatability of performance during frequent matings
– Assembly of the fibre optic contact uses a ceramic ferrule with spherical end face
– Simple and fast polishing ensuring the physical contact of the fibre end face
– The alignment tube can be easily removed in order to clean the fibre end face.

00 Series consists of nine connector models.
The active device housings are designed to accept emitting or receiving components such as LEDs or photodiodes in a TO-18 case.
The plugs and sockets are suitable for use with single fibre cables fitted with single-mode or multi-mode fibres of the following dimensions; 9/125, 50/125, 62.5/125, 100/125 and 100/140 µm.

Interconnections

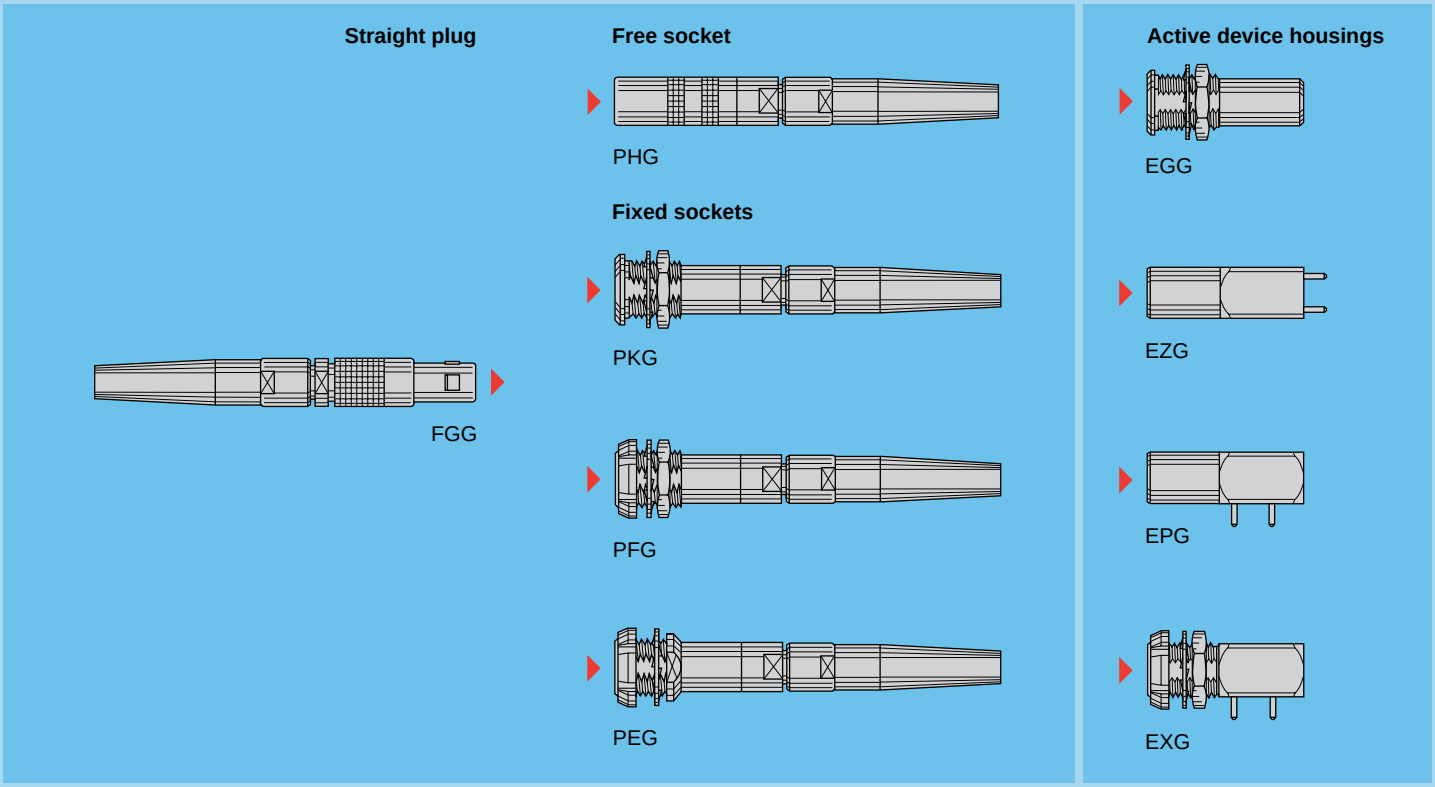

Model Description

EGG Fixed active device housing, nut fixing, key (G) or key (B)
EPG Elbow active device housing (90°) for printed circuit, key (G) or key (B)
EXG Elbow active device housing (90°) for printed circuit, with two nuts, key (G) or key (B), (back panel mounting)
EZG Straight active device housing for printed circuit, key (G) or key (B)
FGG Straight plug, key (G) or key (B), with bend relief
PEG Fixed socket, nut fixing, key (G) or key (B), with bend relief, (back panel mounting)
PFG Fixed socket, with two nuts, key (G) or key (B), with bend relief, (back panel mounting)
PHG Free socket, key (G) or key (B), with bend relief
PKG Fixed socket, nut fixing, key (G) or key (B), with bend relief

Part Section Showing Internal Components

Connector

Free socket

1. outer shell
2. collet nut
3. F4 fibre optic contact
4. alignment tube
5. bend relief

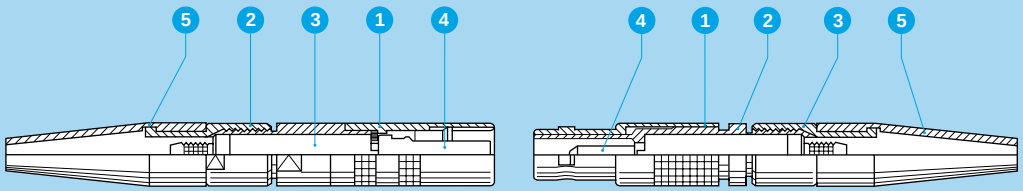

Straight plug

1. outer shell
2. latch sleeve
3. collet nut
4. F4 fibre optic contact
5. bend relief

F4 Contact

Contact with alignment tube

1. body with holder
2. ferrule with holder
3. spring
4. crimp ferrule
5. intermediary tube
6. alignment tube

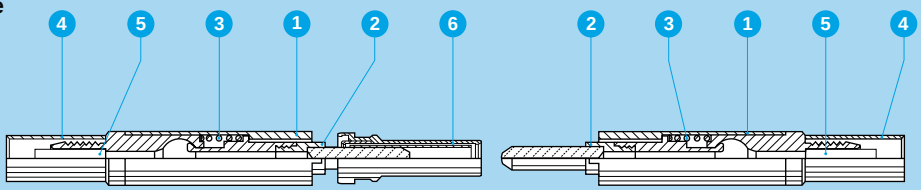

Contact

1. body with holder
2. ferrule with holder
3. spring
4. crimp ferrule
5. intermediary tube

Technical Characteristics

Mechanical and Environmental

Characteristic	Value	Standard
Mating durability	5000 cycles	IEC 61300-02-02
Damp heat steady state	up to 95 % at 60°C	IEC 61300-02-19
High temperature	+80°C	IEC 61300-02-18
Low temperature	-40°C	IEC 61300-02-17
Protection index (mated)	IP 50	IEC 60529
Cable retention	100 N	IEC 61300-02-04

Optical

Characteristic	Value	Standard	Method
Average insertion loss fibre 9/125 µm	0.10 dB	IEC 61300-03-04	Insertion Method B
Average insertion loss fibre 50/125 µm	0.25 dB	IEC 61300-03-04	Insertion Method B
Return loss fibre 9/125 µm (UPC)	≥45 dB	IEC 61300-03-06	Branching Device Met.
Return loss fibre 9/125 µm (Hand polish)	~30 dB	IEC 61300-03-06	Branching Device Met.

Note: Detailed characteristics are presented on pages 109 to 111.

Alignment Key and Polarized Keying Systems

Front view of a socket



Model	No of keys	Angle		Note
●●G	1	α	0°	●
●●B	2		60°	○

● First choice alternative ○ Special order alternative

Part Number Example

A different part number is applicable for each of the following product type:
– Plugs or sockets for assembly onto cables
– Active device housings

Straight plug with bend relief

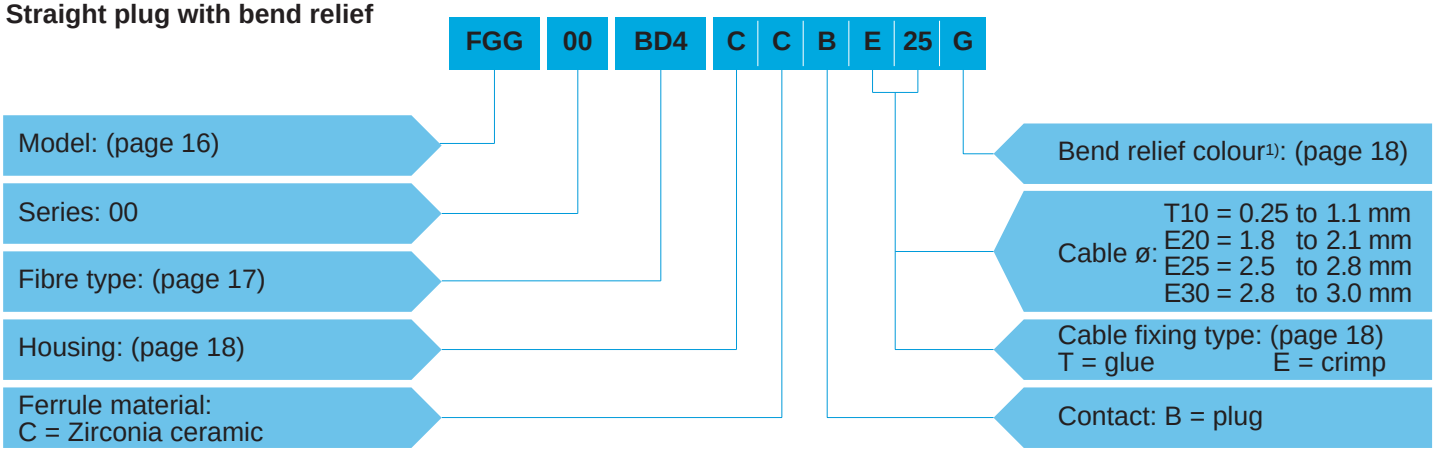

FGG.00.BD4.CCBE25G = Straight plug with key (G), 00 series for single-mode or multi-mode fibres, F4 fibre optic contact, ferrule hole diameter 128 µm, chrome-plated brass housing, zirconia ceramic ferrule, plug type contact, crimp type cable fixing for 2.5 to 2.8 mm diameter cable, and gray bend relief.

Note: 1) The bend relief sleeve is necessary to the proper function of the connector thus the connector can only be ordered with the appropriate sleeve.

Free socket with bend relief

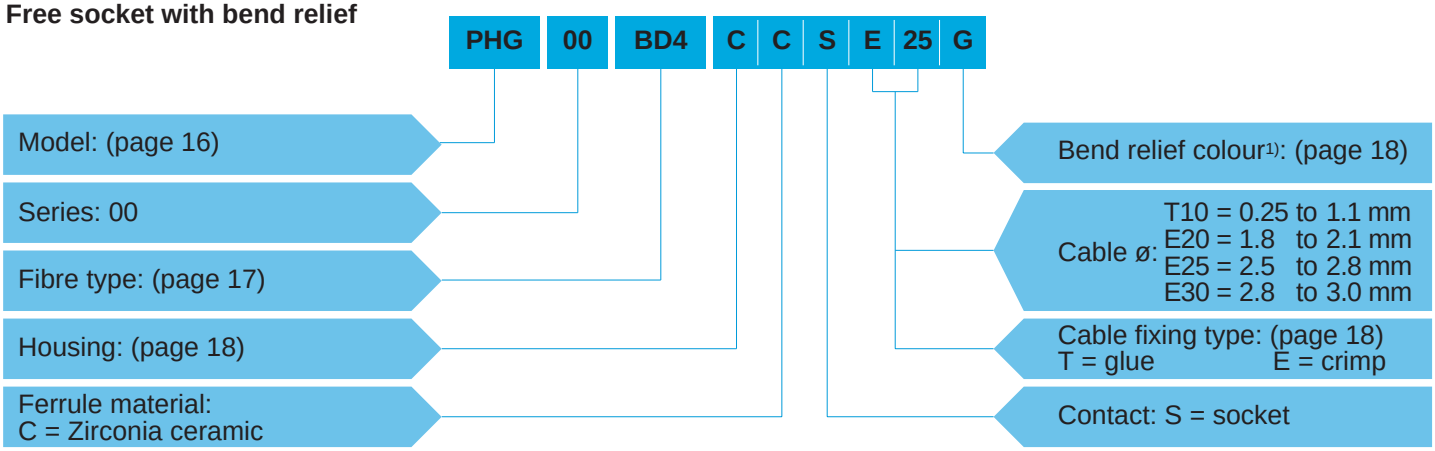

PHG.00.BD4.CCSE25G = Free socket with key (G), 00 series for single-mode or multi-mode fibres, F4 fibre optic contact, ferrule hole diameter 128 µm, chrome-plated brass housing, zirconia ceramic ferrule, socket type contact, crimp type cable fixing for 2.5 to 2.8 mm diameter cable, and gray bend relief.

Note: 1) The bend relief sleeve is necessary to the proper function of the connector thus the connector can only be ordered with the appropriate sleeve.

Active device housing

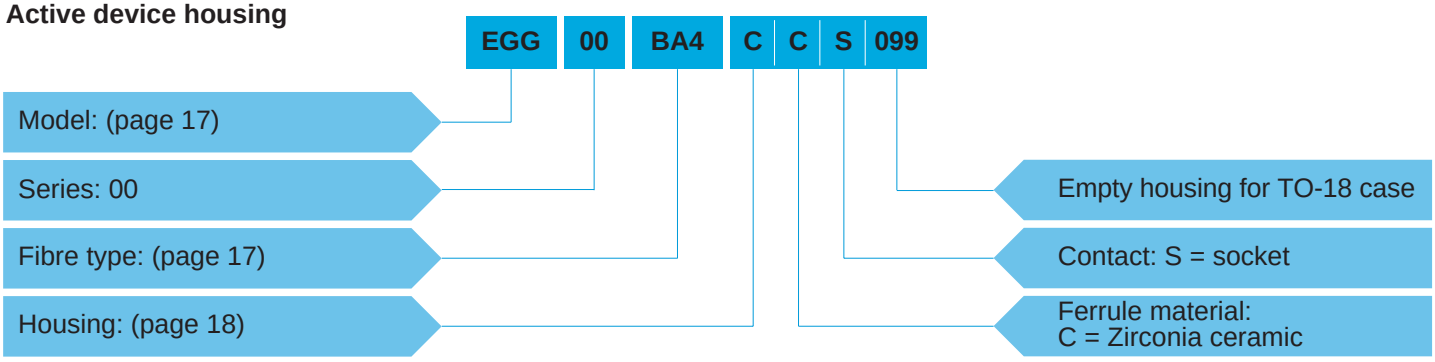

EGG.00.BA4.CCS099 = Straight active device housing, nut fixing with key (G), 00 series, with ferrule for F4 fibre optic contact, assembled with single-mode fibre ø 9/125, chrome-plated brass housing, zirconia ceramic ferrule, socket contact, empty housing for TO-18 case.

FGG.00 Straight plug, key (G) or key (B), with bend relief



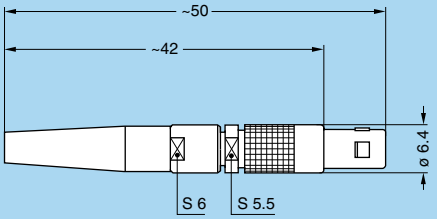

PHG.00 Free socket, key (G) or key (B), with bend relief



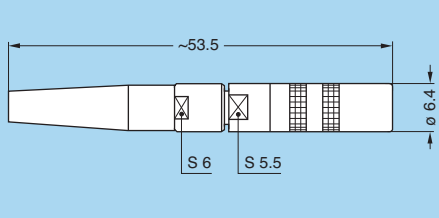

PKG.00 Fixed socket, nut fixing, key (G) or key (B), with bend relief



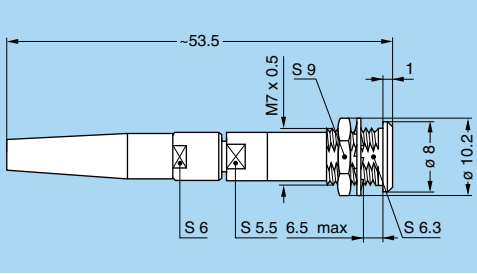

Panel cut-out (page 18)

PEG.00 Fixed socket, nut fixing, key (G) or key (B), with bend relief (back panel mounting)



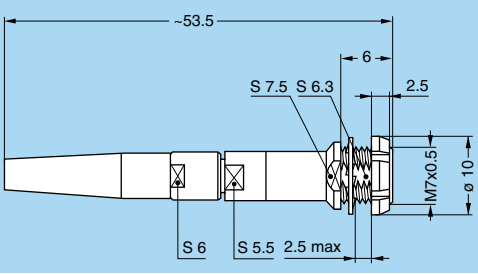

Panel cut-out (page 18)

PFG.00 Fixed socket, with two nuts, key (G) or key (B), with bend relief (back panel mounting)



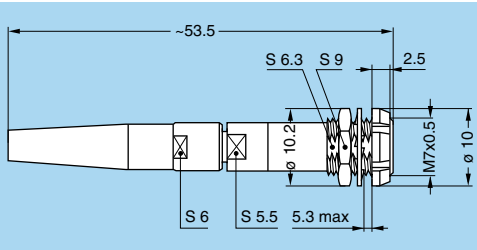

Panel cut-out (page 18)

Note: The overall length dimension is with bend relief (see pages 91 and 92).

EGG.00 Fixed active device housing, nut fixing, key (G) or key (B)



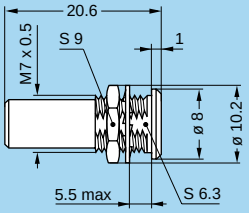

Panel cut-out (page 18)

EZG.00 Straight active device housing for printed circuit, key (G) or key (B)



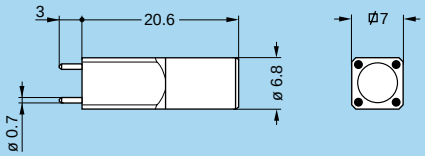

Panel cut-out (page 18) PCB drilling pattern (page 18)

EPG.00 Elbow active device housing (90°) for printed circuit, key (G) or key (B)

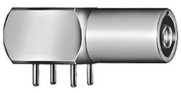

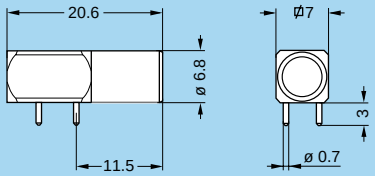

Panel cut-out (page 18) PCB drilling pattern (page 18)

EXG.00 Elbow active device housing (90°) for printed circuit, with two nuts, key (G) or key (B), (back panel mounting)



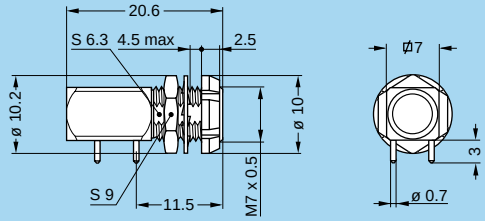

Panel cut-out (page 18) PCB drilling pattern (page 18)

Note: Upon request active device could be delivered with a specific device of your choice already fitted into. Please consult the factory.

Fibre Type

The choice of the ferrule hole diameter is dependent upon the fibre core/cladding size. LEMO offers a range of ferrule hole diameters to suit the users' specific requirements.

Plug or sockets

The type reference represents the ferrule hole diameter.

Reference	ø Core/Cladding (µm)	Ferrule hole diameter (µm)	Note [1]
BA4	9/125 50/125 62.5/125 100/125	125	●
BB4		126	●
BC4		127	○
BD4		128	○
FA4	100/140	140	○
FB4		144	●

Note: [1] The BA4 type (ferrule hole 125 µm) is recommended for single-mode fibres. The BB4 type (ferrule hole 126 µm) is commonly used with multi-mode fibres.

Active device housings

The type reference represents the type of fibre used.

Reference	ø Core/Cladding (µm)	Note
BA4	9/125	●
CA4	50/125	○
DA4	62.5/125	●
EA4	100/125	○
FA4	100/140	●

● First choice alternative ○ Special order alternative

Housing

Ref.	Material	Surface treatment		Note
		Outer shell and collet nut	Latch sleeve and grounding crown	
C	Brass	chrome	nickel	●
N	Brass	nickel	nickel	○
K	Brass	black chrome	nickel	○
T	Stainless steel	without treatment	stainless steel	○

● First choice alternative ○ Special order alternative

Cable Fixing Type

Reference		Cable structure	Cable ø (mm)
Cable fixing Type	Reference ø (mm)		
T	10	Buffer coated fibre	0.25 to 1.1
E	20	Tight jacket cable	1.8 to 2.1
E	25		2.5 to 2.8
E	30		2.8 to 3.0

Bend Relief

Models FGG, PHG, PKG, PEG and PFG are supplied with a bend relief. The reference for the colour of the bend relief is chosen from the table below and it should be stated in the «bend relief» position of the connector part number.

Ref.	Colour
A	blue
B	white

Ref.	Colour
G	grey
J	yellow

Ref.	Colour
M	brown
N	black

Ref.	Colour
R	red
S	orange

Ref.	Colour
V	green

Tooling

The full range of tools for terminating fibre optic F4 contacts for this 00 series is shown on pages 103 to 106.
Consult the factory for the termination instructions.

Panel Cut-Outs

Panel cut-outs

PKG-PEG-PFG
EGG-EXG

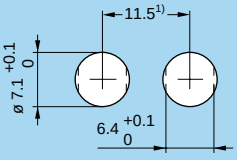

PCB drilling pattern, for the fixing pins

EZG-EPG-EXG

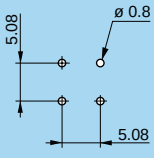

Note: 1) Minimum distance between two neighbouring components.
Mounting nut torque: **1 Nm**. The value shown above is the maximum torque for each connector type.



0B SERIES

0B Series

The 0B series connectors are fitted with the LEMO **F3** type fibre optic contacts.
The main features of this series are as follows:
– Security of the LEMO Push-Pull self-latching system
– Minimum mounting space requirement (high packing density)
– Protection against accidental contamination or damage to the fibre end face because the ferrules do not protrude outside the connector shell
– The alignment key (G, A…F) ensures excellent repeatability of performance during frequent matings
– Simple and proven construction of the fibre optic contact with a ceramic or metallic ferrule
– Polishing with special tooling ensuring a minimum spacing of fibres which are not in physical contact.

0B series consists of six connector models.
The active device housings are designed to accept emitting or receiving components such as LEDs or photodiodes in a TO-18 case (without plastic can).
The plugs and straight sockets are suitable for use with single fibre cables fitted with Si/Si or plastic multi-mode fibres with dimensions ranging from 100/140 to 1500 µm external diameter.

Interconnections

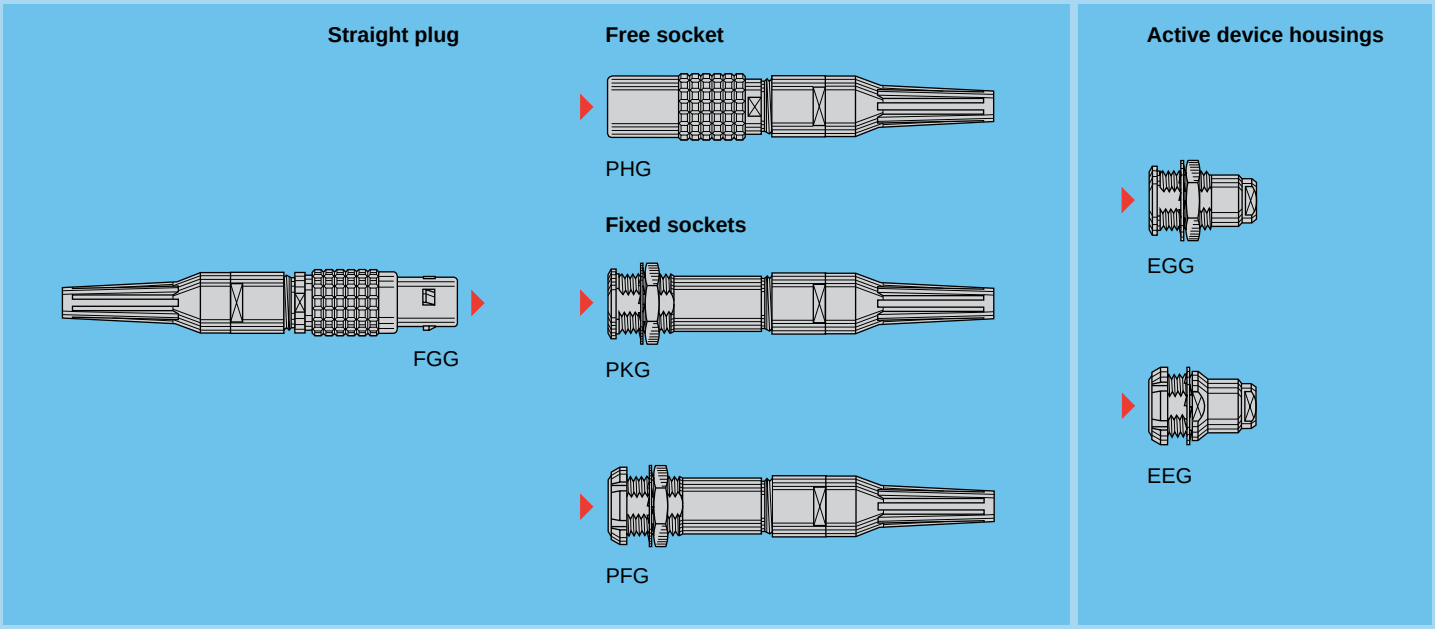

Model description

EEG Fixed active device housing, nut fixing, key (G) or keys (A…F), (back panel mounting)
EGG Fixed active device housing, nut fixing, key (G) or keys (A…F)
FGG Straight plug, key (G) or keys (A…F), with bend relief
PFG Fixed socket, with two nuts, key (G) or keys (A…F), with bend relief, (back panel mounting)
PHG Free socket, key (G) or keys (A…F), with bend relief
PKG Fixed socket, nut fixing, key (G) or keys (A…F), with bend relief

Part Section Showing Internal Components

Connector

Free socket

1. outer shell
2. grounding crown
3. collet nut
4. retaining ring
5. F3 fibre optic contact
6. bend relief

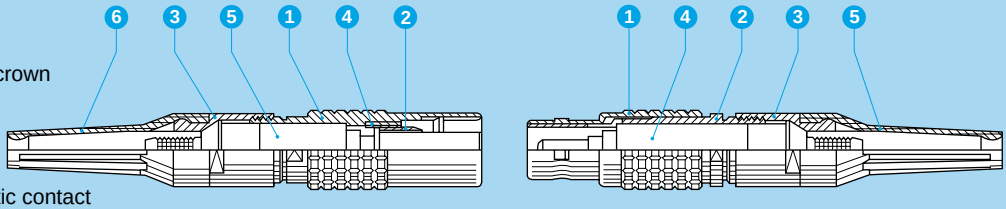

Straight plug

1. outer shell
2. latch sleeve
3. collet nut
4. F3 fibre optic contact
5. bend relief

F3 Contact

Female contact

1. body and holder
2. ferrule with holder
3. crimp ferrule
4. alignment tube

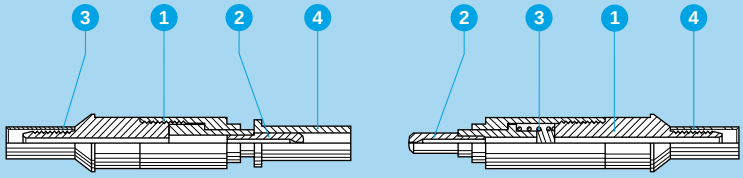

Male contact

1. body and holder
2. ferrule with holder
3. spring
4. crimp ferrule

Technical Characteristics

Mechanical and Environmental

Characteristic	Value	Standard
Mating durability	1000 to 5000 cycles	IEC 61300-02-02
Damp heat steady state	up to 95 % at 60°C	IEC 61300-02-19
High temperature	+80°C	IEC 61300-02-18
Low temperature	-40°C	IEC 61300-02-17
Protection index (mated)	IP 50	IEC 60529
Cable retention	100 N	IEC 61300-02-04

Optical

Characteristic	Value	Standard	Method
Average insertion loss fibre 200/230 µm	1.13 dB	IEC 61300-03-04	Insertion Method B

Note: Detailed characteristics are presented on pages 109 to 111.

Alignment Key and Polarized Keying Systems

Front view of a socket

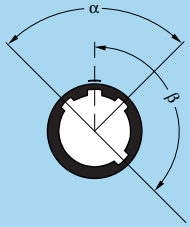

Model	No of keys	Angles		Note
●●G	1	α	0°	●
●●A	2		30°	●
●●B	2		60°	●
●●C	2		90°	●
●●D	2	β	135°	○
●●E	2		145°	○
●●F	2		155°	○

● First choice alternative ○ Special order alternative

Part Number Example

A different part number structure is applicable for each of the following product types:
– Plugs or sockets for assembly onto cables
– Active device housings

Straight plug with bend relief

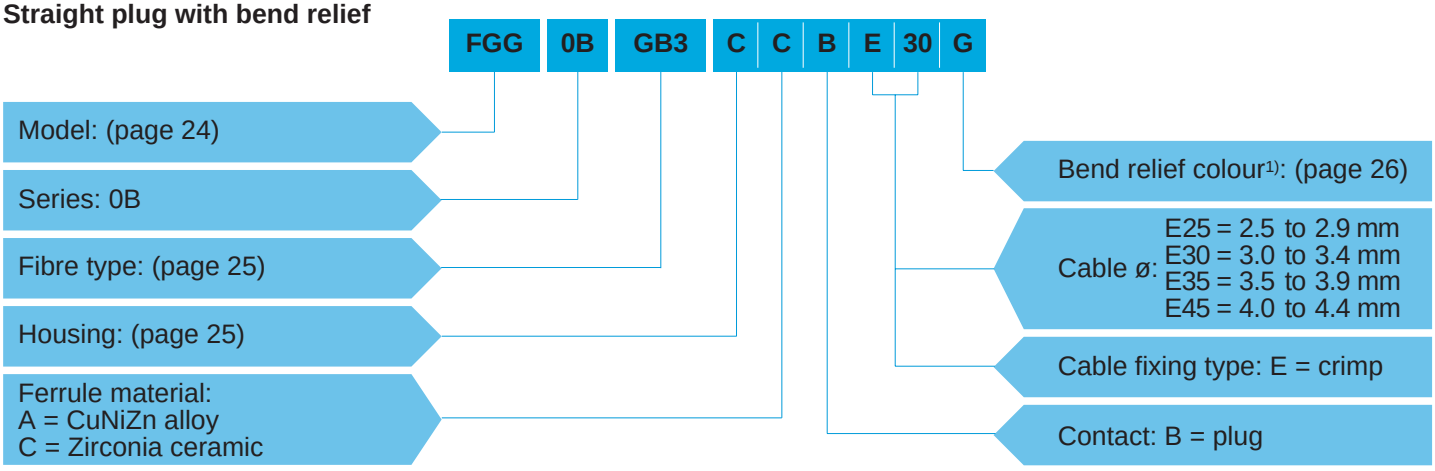

FGG.0B.GB3.CCBE30G = Straight plug with key (G), 0B series, F3 fibre optic contact, ferrule hole diameter 235 µm, chrome-plated brass housing, zirconia ceramic ferrule, plug type contact, crimp type cable fixing for 3.0 to 3.4 mm diameter cable, and gray bend relief.

Note: 1) The bend relief sleeve is necessary to the proper function of the connector thus the connector can only be ordered with the appropriate sleeve.

Free socket with bend relief

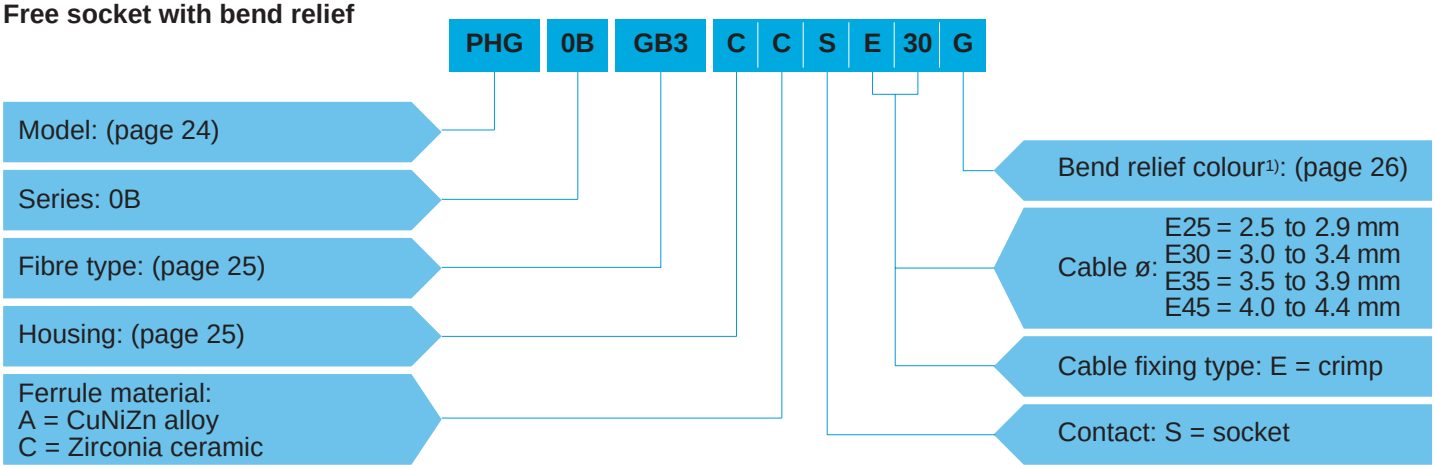

PHG.0B.GB3.CCSE30G = Free socket with key (G), 0B series, F3 fibre optic contact, ferrule hole diameter 235 µm, chrome-plated brass housing, zirconia ceramic ferrule, socket type contact, crimp type cable fixing for 3.0 to 3.4 mm diameter cable, and gray bend relief.

Note: 1) The bend relief sleeve is necessary to the proper function of the connector thus the connector can only be ordered with the appropriate sleeve.

Active device housings

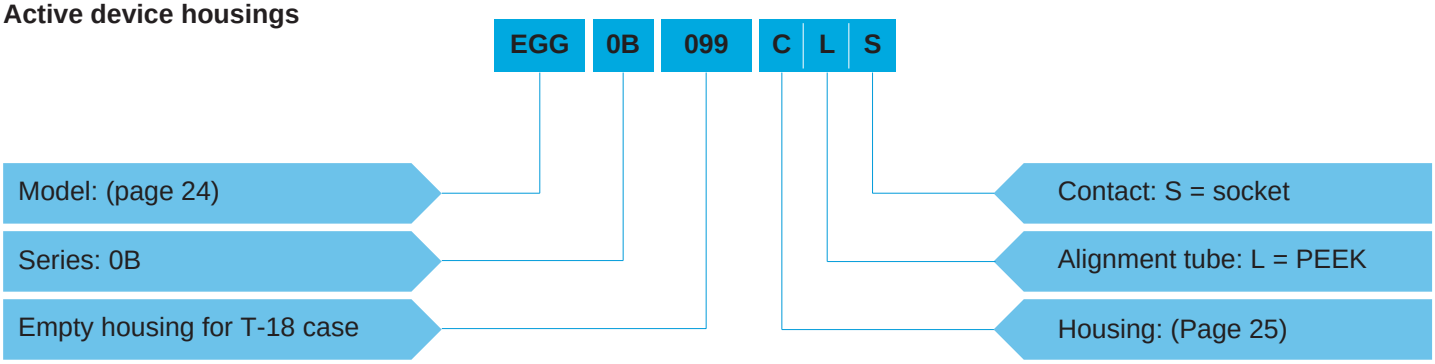

EGG.0B.099.CLS = Fixed active device housing, nut fixing, with key (G), 0B series, empty housing for TO-18 case, chrome-plated brass housing, PEEK alignment tube, socket contact.

Model - Series

FGG.0B Straight plug, key (G) or keys (A…F), with bend relief



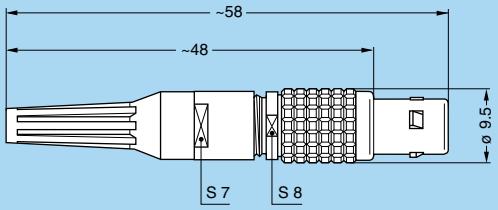

PHG.0B Free socket, key (G) or keys (A…F), with bend relief



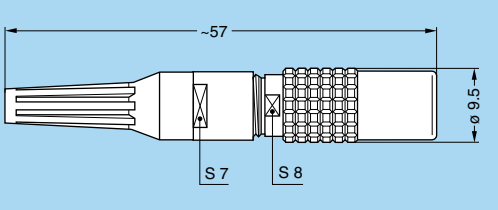

PKG.0B Fixed socket, nut fixing, key (G) or keys (A…F), with bend relief



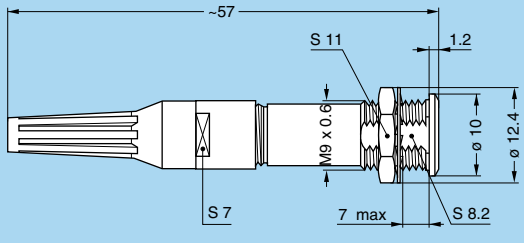

Panel cut-out (page 26)

PFG.0B Fixed socket, with two nuts, key (G) or keys (A…F), with bend relief, (back panel mounting)



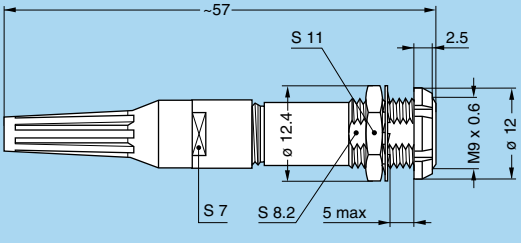

Panel cut-out (page 26)

Note: The overall length dimension is with bend relief (see pages 91 and 92).

EGG.0B Fixed active device housing, nut fixing, key (G) or keys (A…F)



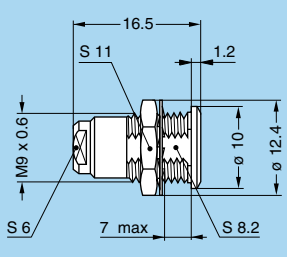

Panel cut-out (page 26)

EEG.0B Fixed active device housing, nut fixing, key (G) or keys (A…F), (back panel mounting)



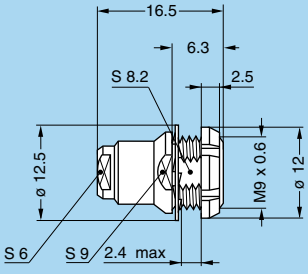

Panel cut-out (page 26)

Fibre Type

The choice of the ferrule hole diameter is dependent upon the fibre cladding size. LEMO offers a range of ferrule hole diameters to suit the users' specific requirements.

Reference	Core/cladding ø (µm)	Ferrule hole ø (µm)	Ferrule material	Material ref.	Fibre type	Note
FB3	100/140	144	Ceramic	C	Silica	●
GA3	200/230	230	Ceramic	C	HCS	○
GB3	200/230	235	Ceramic	C	HCS	●
HA3	300/330	330	Ceramic	C	HCS	○
HB3	300/330	335	Ceramic	C	HCS	●
JA3	400/430	430	Metal	A	HCS	○
JB3	400/430	435	Metal	A	HCS	●
KA3	600/630	630	Metal	A	HCS	○
KB3	600/630	640	Metal	A	HCS	●
LA3	800/830	830	Metal	A	HCS	○
LB3	800/830	845	Metal	A	HCS	●
MA3	1000/1035	1035	Metal	A	HCS	○
MB3	1000/1035	1050	Metal	A	HCS	●
NA3	500	500	Metal	A	Polymer	○
NB3	500	550	Metal	A	Polymer	●
PA3	750	750	Metal	A	Polymer	○
PB3	750	825	Metal	A	Polymer	●
RA3	1000	1000	Metal	A	Polymer	○
RB3	1000	1100	Metal	A	Polymer	●
RK3	1400	1430	Metal	A	Polymer	●
SA3	1500	1500	Metal	A	Polymer	○
SB3	1500	1650	Metal	A	Polymer	●
TA3	200/380	380	Metal	A	PCS	○
TB3	200/380	410	Metal	A	PCS	●
VA3	300/440	440	Metal	A	PCS	○
VB3	300/440	475	Metal	A	PCS	●
WA3	600/750	750	Metal	A	PCS	●
WB3	600/750	810	Metal	A	PCS	●

● First choice alternative
○ Special order alternative

Housing

Ref.	Material	Surface treatment		Note
		Outer shell and collet nut	Latching sleeve and grounding crown	
C	Brass	chrome	nickel	●
N	Brass	nickel	nickel	○
K	Brass	black chrome	nickel	○
T	Stainless steel	without treatment	stainless steel	○

● First choice alternative ○ Special order alternative

Bend Relief

Models FGG, PHG, PKG and PFG are supplied with a bend relief. The reference for the colour of the bend relief is chosen from the table below and it should be stated in the «bend relief» position of the connector part number.

Ref.	Colour
A	blue
B	white

Ref.	Colour
G	grey
J	yellow

Ref.	Colour
M	brown
N	black

Ref.	Colour
R	red
S	orange

Ref.	Colour
V	green

Tooling

The full range of tools for terminating fibre optic F3 contacts of this 0B series is shown on pages 104 to 106.
Consult the factory for the termination instructions.

Panel Cut-Outs

Panel cut-outs

PKG-PFG-EGG-EEG

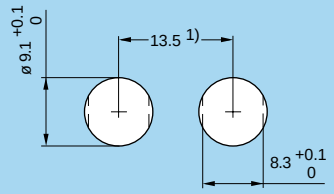

Note: 1) Minimum distance between two neighbouring components.
Mounting nut torque: **2.5 Nm**.
The value shown above is the maximum torque for each connector type.

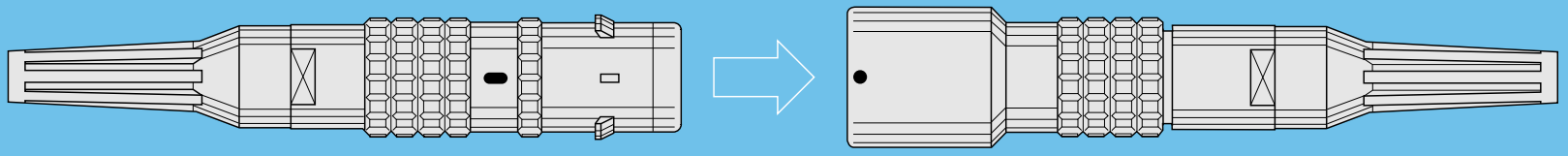

0K SERIES

0K Series

The LEMO 0K series fibre optic connector is ideal for use in harsh environments. The mated connectors are sealed to IP 66-IP 68 (underwater immersion to 1.5 m depth). It uses the standard LEMO **F2** fibre optic contact which has undergone extensive mechanical, optical and environmental testing and has seen service in many critical applications such as outside broadcast television.
Based upon the proven LEMO Push-Pull self-latching system, this new fibre optic connector features:
– Sealed to IP 66-IP 68 for environmental protection
– Highly compact design for space saving
– Very low insertion loss for both multi-mode and single-mode fibres
– Low back reflection performance
– The alignment key (G, A…F) ensures excellent repeatability of performance during frequent matings
– Fully floating ceramic ferrule with spherical end face
– Simple and fast polishing ensuring the physical contact of the fibre end face
– The alignment tube can be easily removed in order to clean the fibre end face
– Field termination possible
– Excellent shock and vibration resistance.

Interconnections

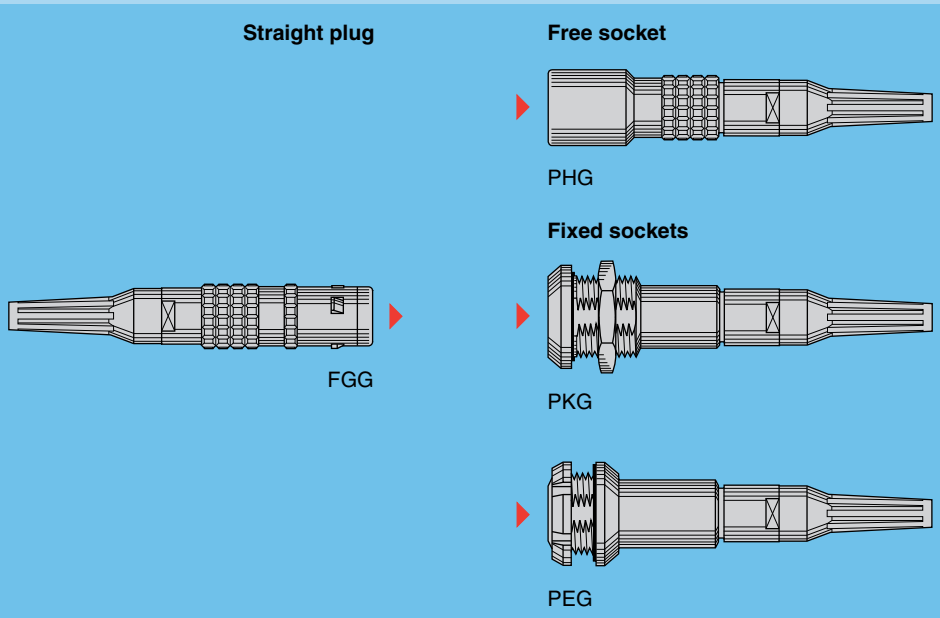

Model Description

FGG Straight plug, key (G) or keys (A…F) and cable adapter, with bend relief
PEG Fixed socket, nut fixing, key (G) or keys (A…F) and cable adapter, with bend relief (back panel mounting)

PHG Free socket, key (G) or keys (A…F) and cable adapter, with bend relief

PKG Fixed socket, nut fixing, key (G) or keys (A…F) and cable adapter, with bend relief

Part Section Showing Internal Components

Connector

Free socket

1. shell
2. grounding crown
3. retaining ring
4. o-ring
5. collet nut
6. adapter w. blue ring
7. o-ring
8. bend relief

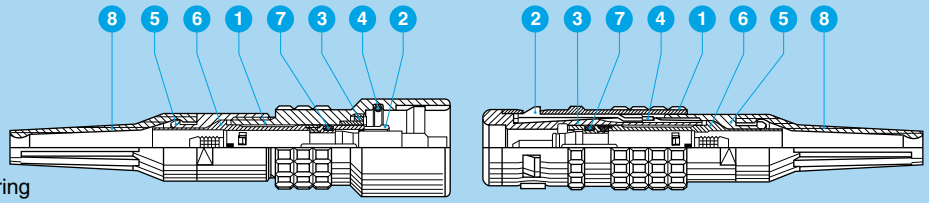

Straight plug

1. shell
2. latch sleeve
3. inner shell
4. circlip
5. collet nut
6. adapter w. green ring
7. o-ring
8. bend relief

F2 Contact

Female contact

1. body with holder
2. ferrule with holder
3. spring
4. crimp ferrule
5. alignment tube with support

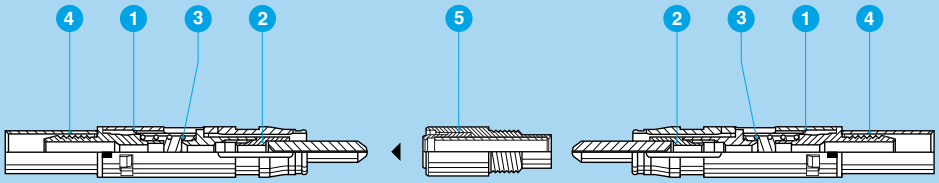

Male contact

1. body with holder
2. ferrule with holder
3. spring
4. crimp ferrule

Technical Characteristics

Mechanical and Environmental

Characteristic	Value	Standard
Mating durability	5000 cycles	IEC 61300-02-02
Damp heat steady state	up to 95 % at 60°C	IEC 61300-02-19
High temperature	+80°C	IEC 61300-02-18
Low temperature	-40°C	IEC 61300-02-17
Protection index (mated)	IP 66-IP 68	IEC 60529
Cable retention	100 N	IEC 61300-02-04
Impact (Method A)	1 m onto concrete floor	IEC 61300-02-12
Shock (3 cycles in 2 directions)	100 g, 10-50 ms; 20 g 6-9 ms	IEC 61300-02-09
Vibration (7 cycles)	Diagram 2 page 111	IEC 61300-02-01

Optical

Characteristic	Value	Standard	Method
Average insertion loss fibre 9/125 µm	0.10 dB	IEC 61300-03-04	Insertion Method B
Average insertion loss fibre 50/125 µm	0.25 dB	IEC 61300-03-04	Insertion Method B
Return loss fibre 9/125 µm (UPC)	≥45 dB	IEC 61300-03-06	Branching Device Met.
Return loss fibre 9/125 µm (Hand polish)	~30 dB	IEC 61300-03-06	Branching Device Met.

Note: Detailed characteristics are presented on pages 109 to 111.

Alignment Key and Polarized Keying Systems

Front view of a socket

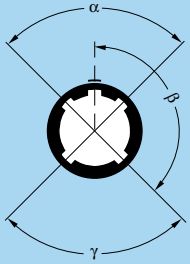

Model	No of keys	Angles		Note
●●G	1	α	0°	●
●●A	2		30°	●
●●B	2		45°	●
●●C	2		60°	●
●●D	2	γ	95°	○
●●E	2	β	120°	○
●●F	2		145°	○

● First choice alternative ○ Special order alternative

Part Number Example

Straight plug with bend relief

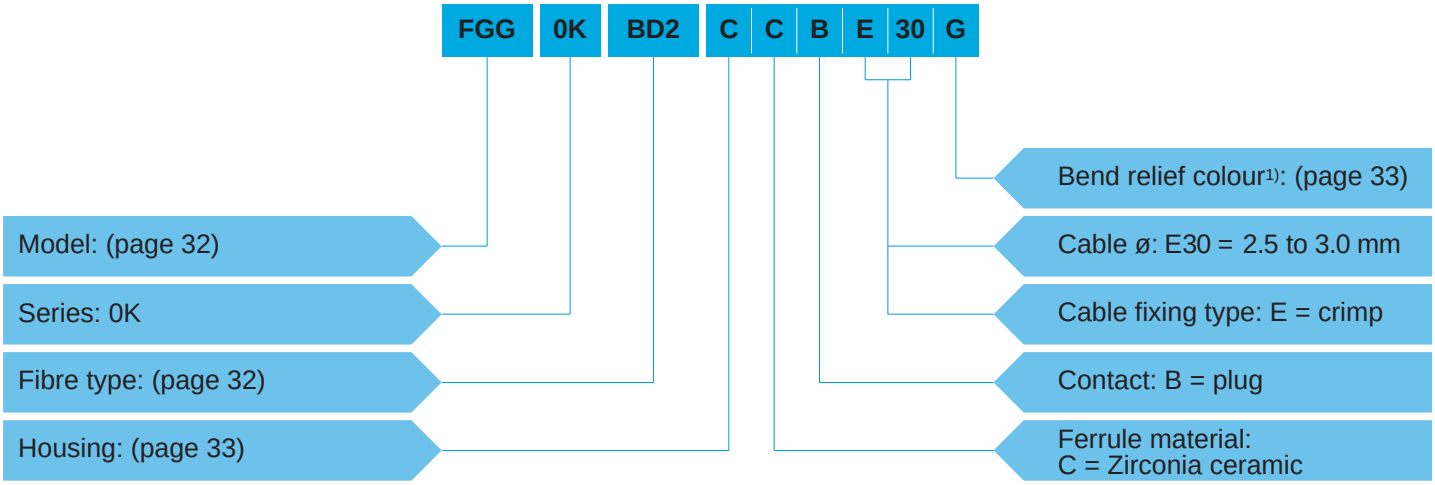

FGG.0K.BD2.CCBE30G = Straight plug with key (G), 0K series, F2 fibre optic contact, ferrule hole ø 128 µm, chrome-plated brass housing, zirconia ceramic ferrule, plug type contact, crimp type cable fixing for 2.5 to 3.0 mm diameter cable, and gray bend relief.

Note: 1) The bend relief sleeve is necessary to the proper function of the connector thus the connector can only be ordered with the appropriate sleeve.

Free socket

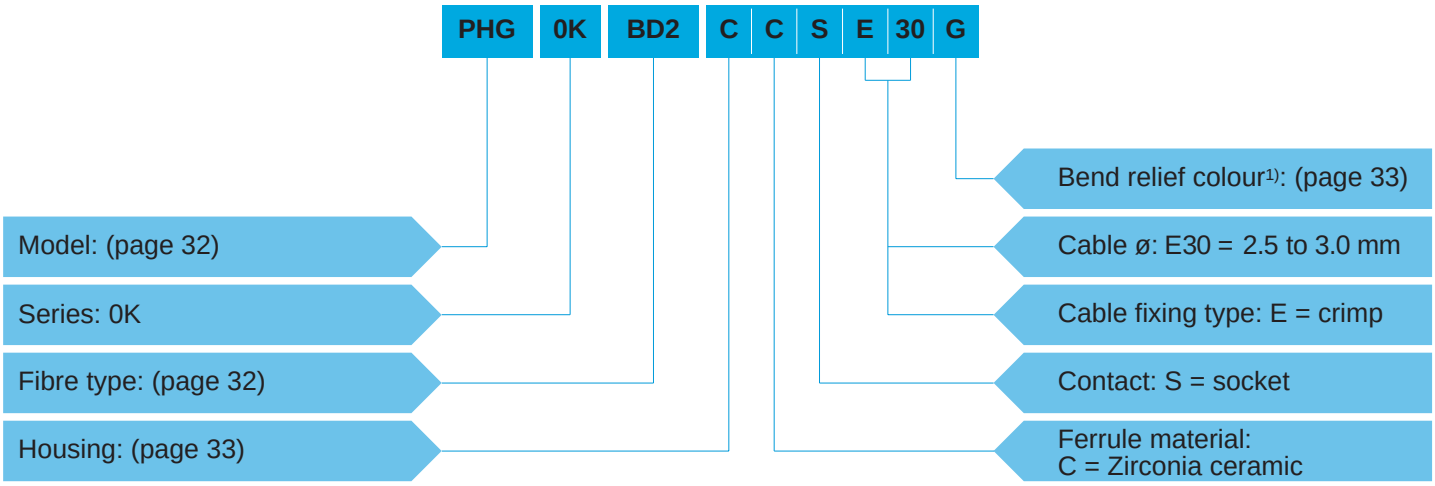

PHG.0K.BD2.CCSE30G = Free socket with key (G), 0K series, F2 fibre optic contact, ferrule hole ø 128 µm, chrome-plated brass housing, zirconia ceramic ferrule, socket type contact, crimp type cable fixing for 2.5 to 3.0 mm diameter cable, and gray bend relief.

Note: 1) The bend relief sleeve is necessary to the proper function of the connector thus the connector can only be ordered with the appropriate sleeve.

Models - Series

FGG.0K Straight plug, key (G) or keys (A…F) and cable adapter, with bend relief

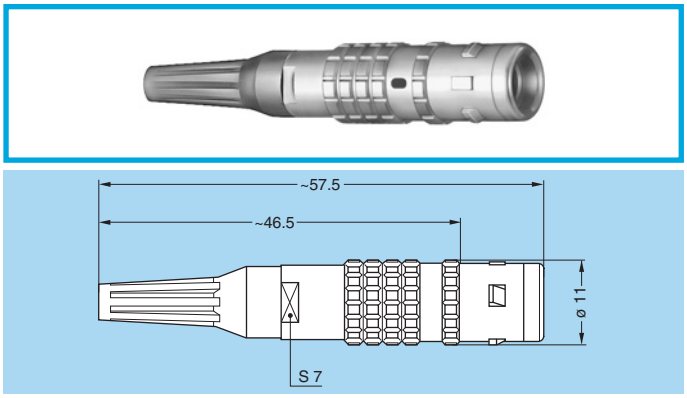

PHG.0K Free socket, key (G) or keys (A…F) and cable adapter, with bend relief

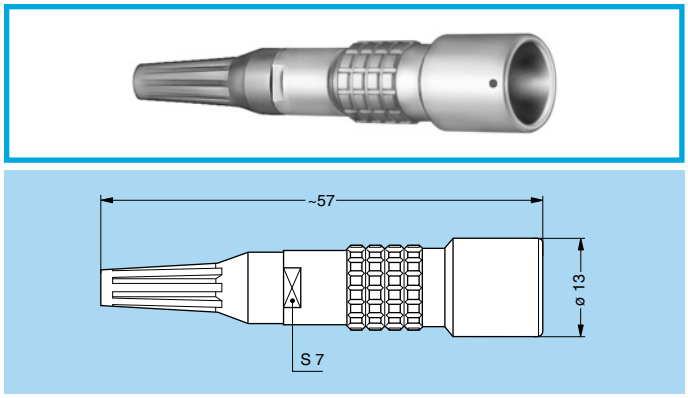

PKG.0K Fixed socket, nut fixing, key (G) or keys (A…F) and cable adapter, with bend relief

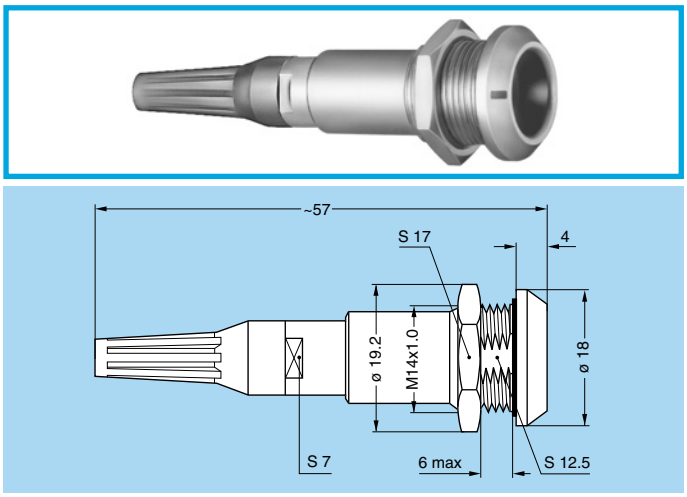

Panel cut-out (page 33)

PEG.0K Fixed socket, nut fixing, key (G) or keys (A…F) and cable adapter, with bend relief (back panel mounting)

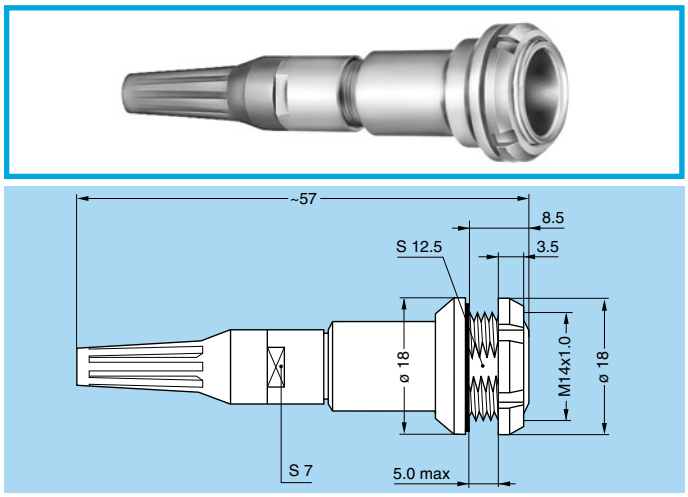

Panel cut-out (page 33)

Note: The overall length dimension is with bend relief (see pages 91 and 92).

Fibre Type

The choice of the ferrule hole diameter is dependent upon the fibre core/cladding size. LEMO offers a range of ferrule hole diameters to suit the users' specific requirements.

Plug or sockets

The type reference represents the ferrule hole diameter.

Reference	ø Core/Cladding (µm)	Ferrule hole diameter (µm)	Note [1]
BA2	9/125 50/125 62.5/125 100/125	125	●
BB2		126	●
BC2		127	○
BD2		128	○
FA2	100/140	140	○
FB2		144	●

Note:
[1] The BA2 type (ferrule hole 125 µm) is recommended for single-mode fibres. The BB2 type (ferrule hole 126 µm) is commonly used with multi-mode fibres.

● First choice alternative ○ Special order alternative

Housing

Ref.	Material	Surface treatment		Note
		Outer shell and collet nut	Latching sleeve and grounding crown	
C	Brass	chrome	nickel	●
N	Brass	nickel	nickel	○
K	Brass	black chrome	nickel	○
T	Stainless steel	without treatment	stainless steel	○

● First choice alternative ○ Special order alternative

Bend Relief

All models are supplied with a bend relief. The reference for the colour of the bend relief is chosen from the table below and it should be stated in the «bend relief» position of the connector part number.

Ref.	Colour
A	blue
B	white

Ref.	Colour
G	grey
J	yellow

Ref.	Colour
M	brown
N	black

Ref.	Colour
R	red
S	orange

Ref.	Colour
V	green

Tooling

The full range of tools for terminating fibre optic F2 contacts of this 0K series is shown on pages 103 to 106.
Consult the factory for the termination instructions.

Panel Cut-Outs

Panel cut-outs

PEG-PKG

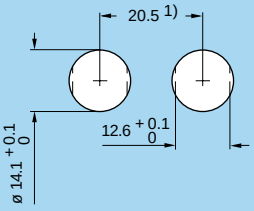

Note: 1) Minimum distance between two neighbouring components.
Mounting nut torque: **5 Nm**.
The value shown above is the maximum torque for each connector type.

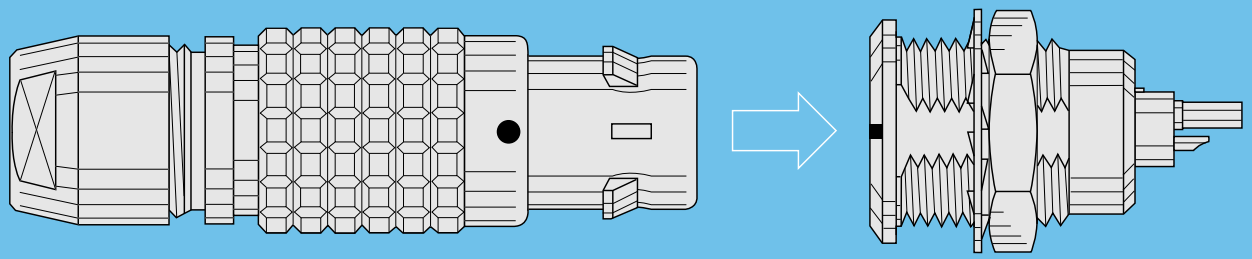

2B-5B SERIES

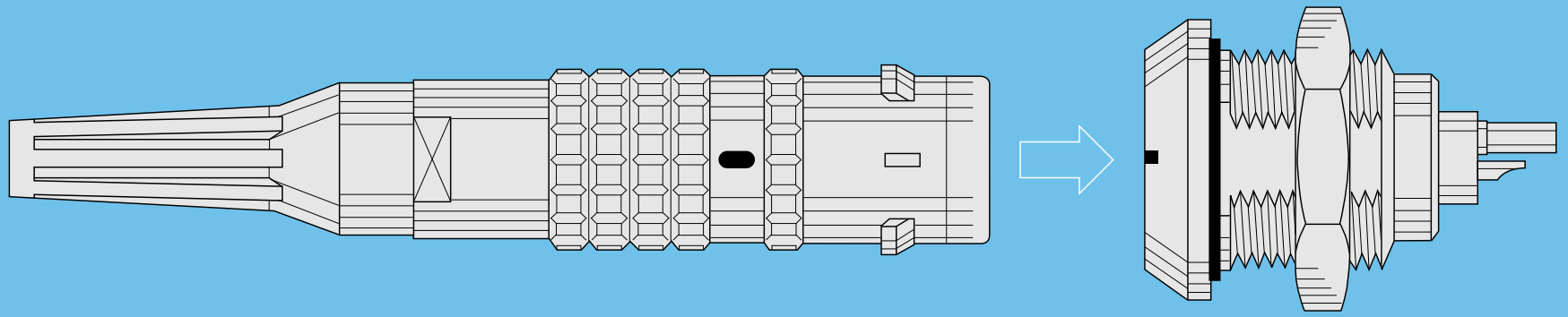

2K-5K SERIES

2B-5B Series

The 2B-5B connectors have been designed to work with the LEMO **F1** or **F2** type fibre optic contacts.
The main features of these series are as follows:
– Security of the LEMO Push-Pull self-latching system
– Protection against accidental contamination or damage to the fibre end face because the ferrules are recessed within the connector shell
– The alignment key (G, A…L, Y and R) ensures excellent repeatability of performance during frequent matings
– A choice of configurations of multi fibre or hybrid optical/electrical contacts.
The 2B-5B series consist of fifteen models. The possible outer cable diameters range from 1.5 to 25 mm.
Depending upon the type of fibre optic contact chosen, the connectors can accommodate single-mode fibres in Si/Si 9/125 or multi-mode fibres in silica or plastic with an external diameter up to 1500 μm.

Interconnections

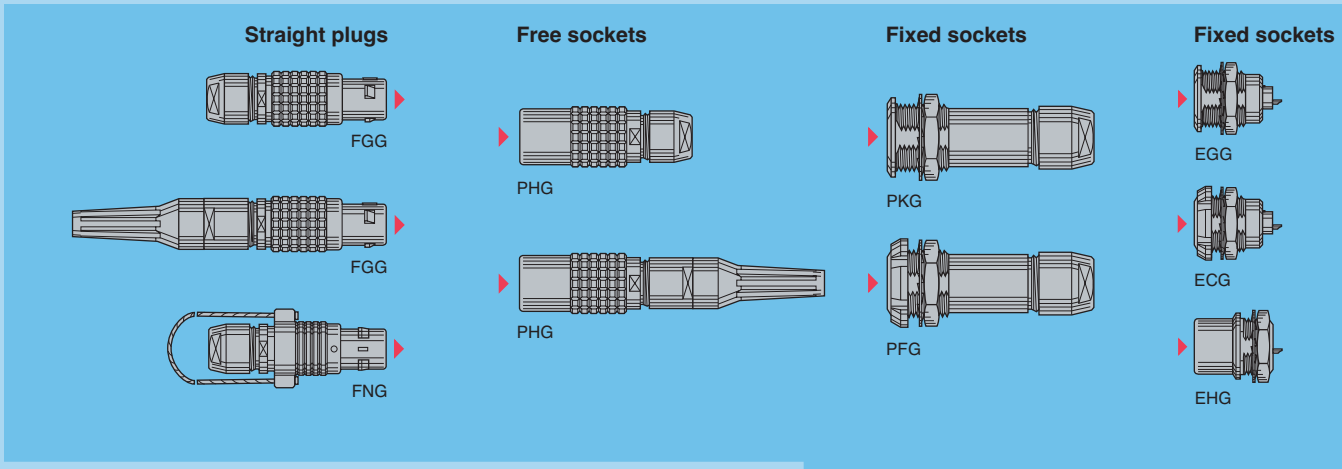

Plastic housing models

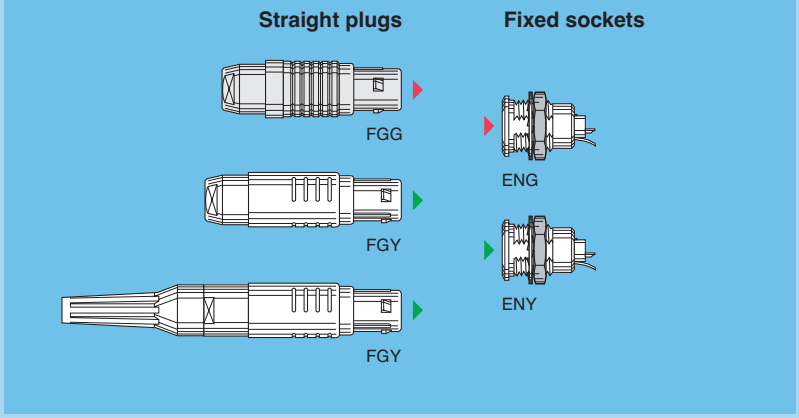

Model Description

ECG Fixed socket, with two nuts, key (G) or keys (A…L and R), (back panel mounting)
EGG Fixed socket, nut fixing, key (G) or keys (A…L and R)
EHG Fixed socket, nut fixing, key (G) or keys (A…L and R) with visible shell
ENG Fixed socket with grounding tab, nut fixing, key (G or J), PEEK outer shell
ENY Fixed socket with grounding tab, nut fixing, keys (Y), PSU or PPSU outer shell
FGG Straight plug, key (G) or keys (A…L and R) and cable collet
FGG Straight plug, key (G) or keys (A…L) cable collet and nut for fitting a bend relief
FGG Straight plug, key (G or J), cable collet, PEEK outer shell
FGY Straight plug, keys (Y), cable collet and PSU or PPSU outer shell
FGY Straight plug, keys (Y), cable collet and PSU or PPSU outer shell and nut for fitting a bend relief
FNG Straight plug, key (G) or keys (A…L and R) and cable collet with lanyard release
PFG Fixed socket, with two nuts, key (G) or keys (A…L and R) and cable collet (back panel mounting)
PHG Free socket, key (G) or keys (A…L and R) and cable collet
PHG Free socket, key (G) or keys (A…L) and cable collet and nut for fitting a bend relief
PKG Fixed socket, nut fixing, key (G) or keys (A…L and R) and cable collet

Part Section Showing Internal Components

Fixed socket

1. outer shell
2. grounding crown
3. retaining ring
4. hexagonal nut
5. insulator
6. female contact
7. locking washer

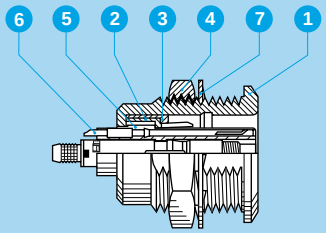

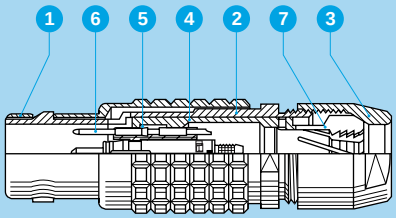

Straight plug

1. outer shell
2. latch sleeve
3. collet nut
4. split insert carrier
5. insulator
6. male contact
7. collet

Technical Characteristics

Mechanical and Environmental

Characteristics	Value	Standard
Mating durability	> 5000 cycles	IEC 60512-5 test 9a
Humidity	up 95% to 60°C	
Temperature cycling	-55°C + 90°C	
Resistance to vibration	10-2000 Hz, 15 g	IEC 60512-4 test 6d
Shock resistance	100 g, 6 ms	IEC 60512-4 test 6c
Salt spray corrosion test [1)]	> 144h	IEC 60512-6 test 11f
Protection index (mated)	IP 50	IEC 60529

Note: [1)] The outer shells are in chrome-plated brass (Cr1).

Electrical

Characteristics		Value	Standard
Shielding efficiency	at 10 MHz	> 75 dB	IEC 60169-1-3
	at 1 GHz	> 40 dB	IEC 60169-1-3

Note:
The various tests have been carried out with FGG and EGG connector pairs, with chrome-plated brass shell and PEEK insulator.
Detailed electrical characteristics, as well as materials and treatment are presented in the chapter Technical Characteristics on page 107.

Optical

Note: Detailed optical performances for F1 or F2 fibre optic contacts are given on pages 109 to 111.

Alignment Key and Polarized Keying Systems

Front view of a socket

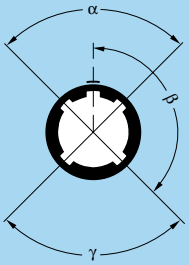

Model	No of keys	Angle	Series 2B	Series 3B	Series 4B	Series 5B	Type of fibre optic or LV contact: Plug	Type of fibre optic or LV contact: Socket	Note
●●G	1	α	0°	0°	0°	0°	male	female	●
●●A	2	α	30°	30°	30°	30°	male	female	●
●●B	2	α	45°	45°	45°	45°	male	female	●
●●C	2	α	60°	60°	60°	60°	male	female	●
●●D	2	γ	95°	95°	95°	95°	male	female	○
●●E	2	β	120°	120°	120°	120°	male	female	○
●●F	2	β	145°	145°	145°	145°	male	female	○
●●J	2	α	37.5°	37.5°	37.5°	37.5°	female	male	●
●●K	2	α	52.5°	52.5°	52.5°	52.5°	female	male	○
●●L	2	γ	70°	70°	70°	70°	female	male	○
●●Y	3	β	112.5°	126°	–	–	male	female	●[1)]
		γ	100°	102°	–	–			

Front view of a socket

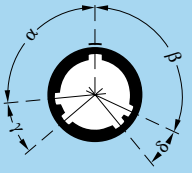

Model	No of keys	Angle	Series 2B	Series 3B	Series 4B	Series 5B	Type of fibre optic or LV contact: Plug	Type of fibre optic or LV contact: Socket	Note
●●R	5	α	–	–	–	95°	male	female	○
		β	–	–	–	115°			
		γ	–	–	–	20°			
		δ	–	–	–	30°			

Note:
FGY, ENY models are not available with all the keys. Please consult pages corresponding to these models.
[1)] Only FGY and ENY models are available.

● First choice alternative ○ Special order alternative

Part Number Example

A different part number structure is applicable for each of the following product types:
– Plugs or sockets for assembly onto cables
– Fixed sockets.

Straight plug

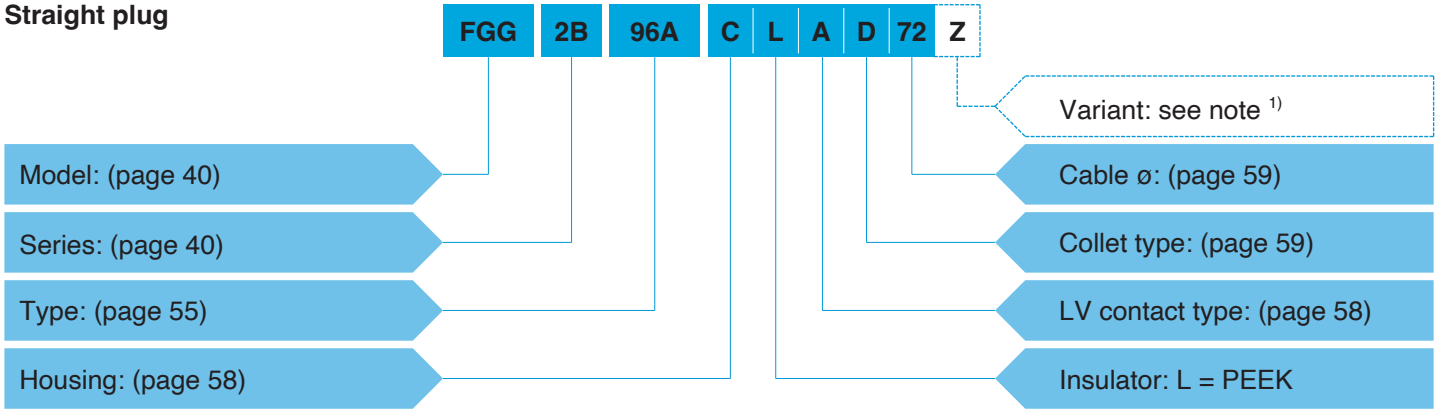

FGG.2B.96A.CLAD72Z = Straight plug with key (G), 2B series, hybrid type to accept 1 F1 fibre optic contact and 2 low voltage electrical contacts, chrome-plated brass housing, PEEK insulator, 2 male solder electrical contacts, type D collet system to suit a 7.2 mm diameter cable, and a nut for fitting a bend relief.

Free socket

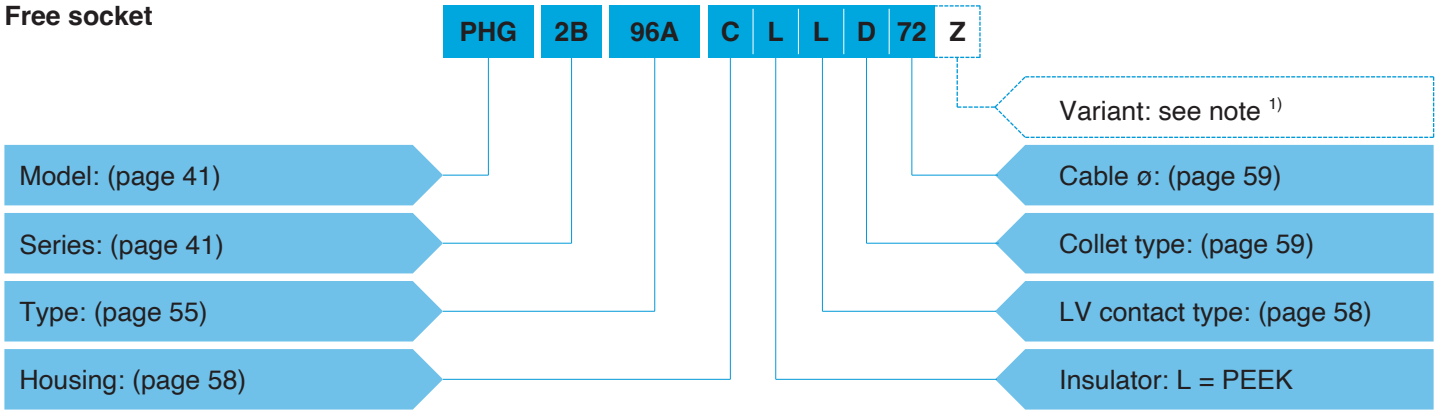

PHG.2B.96A.CLLD72Z = Free socket with key (G), 2B series, hybrid type to accept 1 F1 fibre optic contact and 2 low voltage electrical contacts, chrome-plated brass housing, PEEK insulator, 2 female solder electrical contacts, type D collet system to suit a 7.2 mm diameter cable, and a nut for fitting a bend relief.

Fixed socket

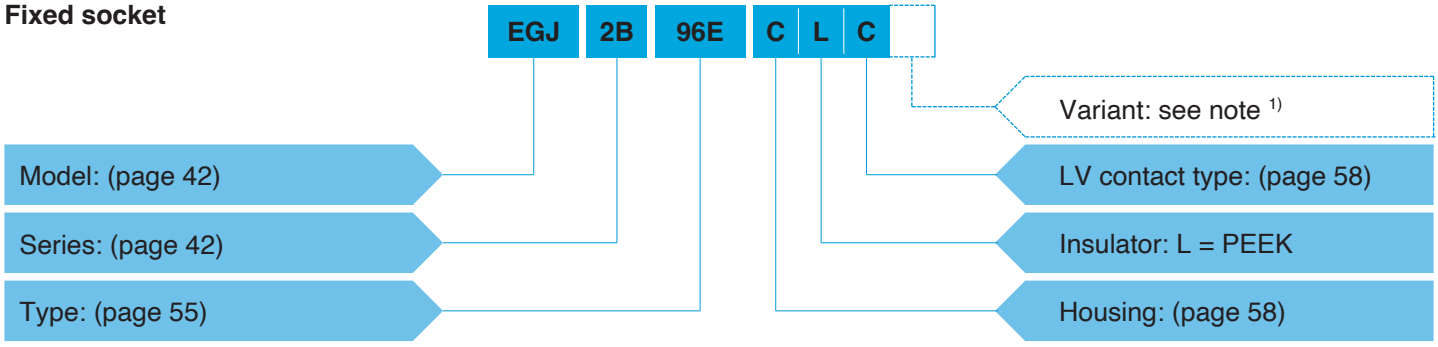

EGJ.2B.96E.CLC = Fixed socket with key (code J) 2B series, hybrid type to accept 1 F1 fibre optic contact and 6 low voltage electrical contacts, chrome-plated brass housing, PEEK insulator, 6 male crimp electrical contacts.

Connectors are delivered without fibre optic contacts, therefore they must be ordered separately according to the size and type of fibre (see pages 77 and 79). In case of hybrid with coax contacts type C, connectors are delivered without the coax contact. See page 58 for ordering.

Note: 1) The «Variant» position in the reference is used to specify either the presence of a collet nut for fitting the bend relief, or the anodized colour of the housing in aluminium alloy. For models with collet nut for fitting the bend relief, a «Z» should be indicated and a bend relief can be ordered separately as indicated in the «Accessories» section. An order for a connector with bend relief should thus include two part numbers.
For the various housings available in colours, the corresponding letter in the part number for the colour is indicated on page 61.

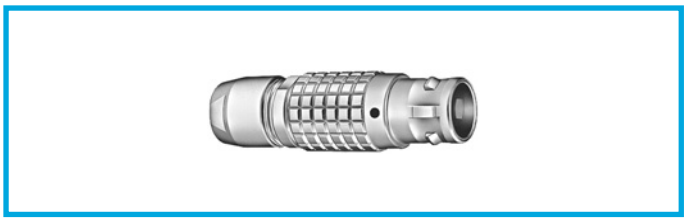

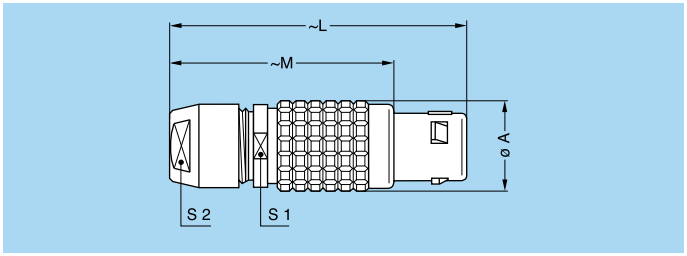

FGG Straight plug, key (G) or keys (A…L and R) and cable collet

Reference		Dimensions (mm)				
Model	Series	A	L	M	S1	S2
FGG	2B	15	50	38	13	12
FGG	3B	18	58	43	15	14
FGG	4B	25	75	57	21	20
FGG	5B	35	103	78	31	30

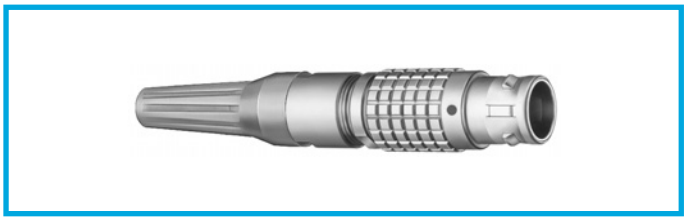

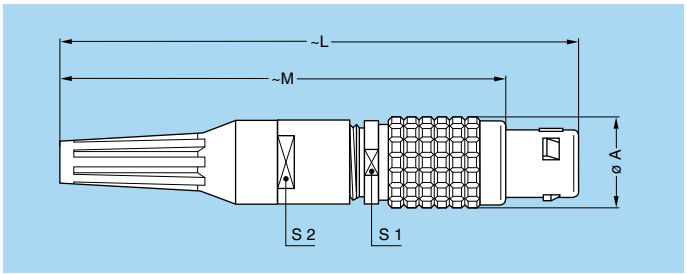

FGG Straight plug, key (G) or keys (A…L) cable collet and nut for fitting a bend relief

Reference		Dimensions (mm)				
Model	Series	A	L	M	S1	S2
FGG	2B	15	84.0	72.0	13	12
FGG	3B	18	98.5	83.5	15	15
FGG	4B	25	131.0	113.0	21	20
FGG	5B	35	167.5	142.5	31	30

Note: The bend relief must be ordered separately (see pages 61 and 91). The overall length dimension is with bend relief (see pages 91 and 92).

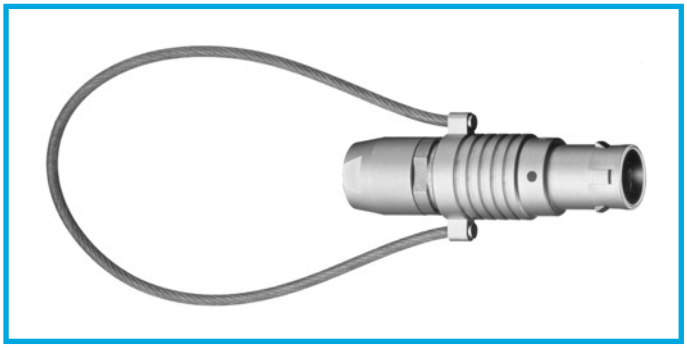

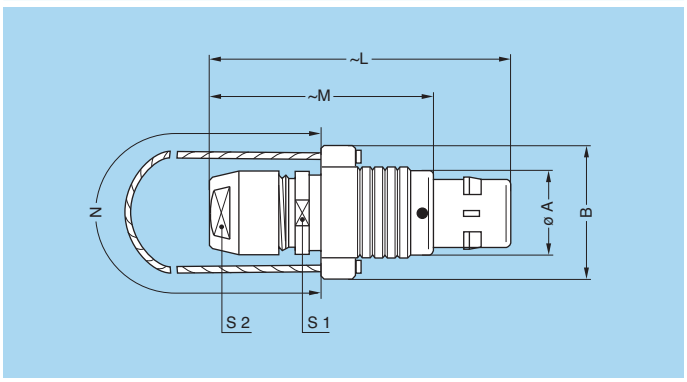

FNG Straight plug, key (G) or keys (A…L and R) and cable collet with lanyard release

Reference		Dimensions (mm)						
Model	Series	A	B	L	M	N	S1	S2
FNG	2B	15	22.6	49	37	160	13	12
FNG	3B	18	25.6	58	43	190	15	14
FNG	4B	25	35.2	75	57	230	21	20
FNG	5B	35	47.0	103	78	300	31	30

Note: Cable material: stainless steel with PVC sheath.

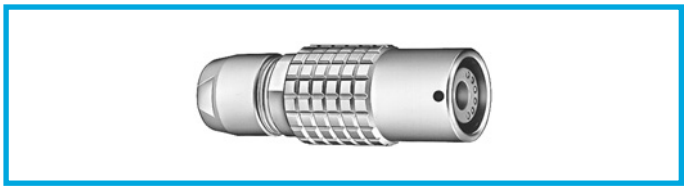

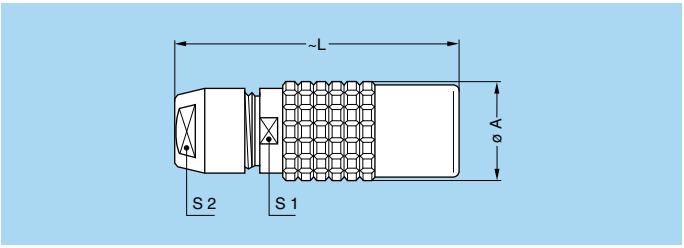

PHG Free socket, key (G) or keys (A…L and R) and cable collet

Reference		Dimensions (mm)			
Model	Series	A	L	S1	S2
PHG	2B	16.5	47	13	12
PHG	3B	19.0	56	15	14
PHG	4B	24.4	73	21	20
PHG	5B	34.2	99	31	30

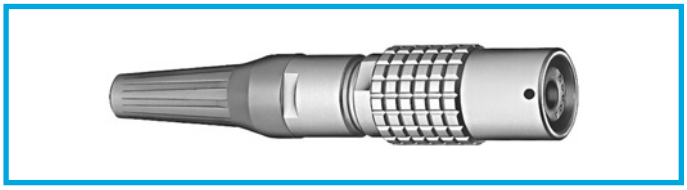

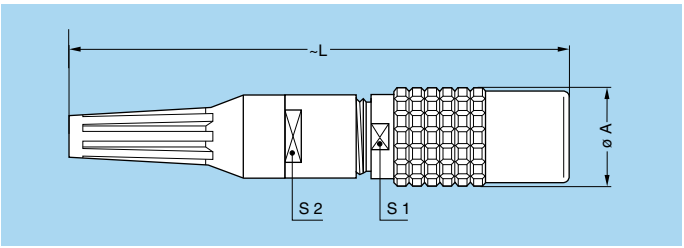

PHG Free socket, key (G) or keys (A…L) and cable collet and nut for fitting a bend relief

Reference		Dimensions (mm)			
Model	Series	A	L	S1	S2
PHG	2B	16.5	82.0	13	12
PHG	3B	19.0	96.5	15	15
PHG	4B	24.4	129.0	21	20
PHG	5B	34.2	163.5	31	30

Note: The bend relief must be ordered separately (see pages 61 and 91). The overall length dimension is with bend relief (see pages 91 and 92).

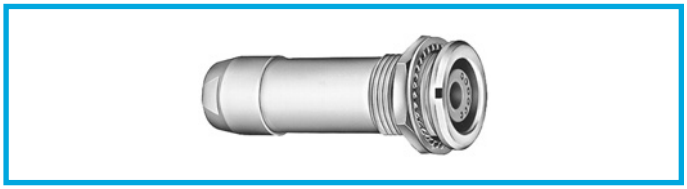

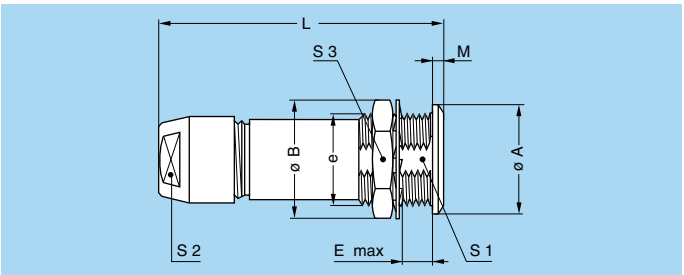

PKG Fixed socket, nut fixing, key (G) or keys (A…L and R) and cable collet

Reference		Dimensions (mm)								
Model	Series	A	B	e	E	L	M	S1	S2	S3
PKG	2B	18	19.2	M15x1	8.5	47	1.8	13.5	12	17
PKG	3B	22	25.0	M18x1	11.5	56	2.0	16.5	14	22
PKG	4B	28	34.0	M25x1	12.5	73	2.5	23.5	20	30
PKG	5B	40	40.0	M35x1	11.0	99	3.0	33.5	30	–

Panel cut-out: **P1** (see page 45)

Note: The 5B series is delivered with a tapered washer and a round nut (see pages 94 and 95).

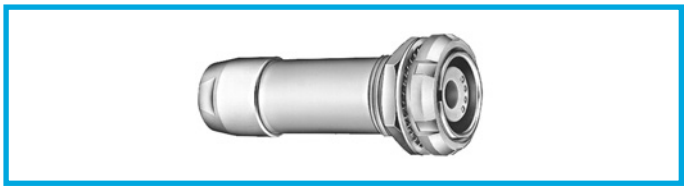

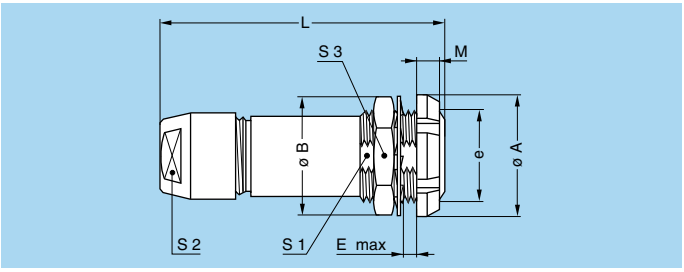

PFG Fixed socket, with two nuts, key (G) or keys (A…L and R) and cable collet, (back panel mounting)

Reference		Dimensions (mm)								
Model	Series	A	B	e	E	L	M	S1	S2	S3
PFG	2B	20	19.2	M15x1	6.5	47	3.5	13.5	12	17
PFG	3B	24	25.0	M18x1	9.0	56	4.5	16.5	14	22
PFG	4B	30	34.0	M25x1	11.0	73	4.5	23.5	20	30
PFG	5B	41	40.0	M35x1	10.0	99	5.0	33.5	30	–

Panel cut-out: **P1** (see page 45)

Note: The 3B, 4B and 5B series are delivered with a conical nut.
The 5B series is delivered with a tapered washer and a round nut (see pages 94 and 95).



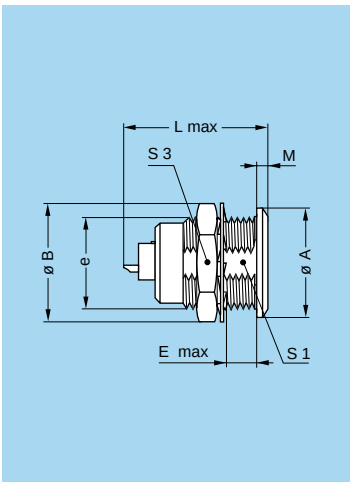

EGG Fixed socket, nut fixing, key (G) or keys (A…L and R)

Reference		Dimensions (mm)								
Model	Series	A	B	e	E	L max 1) F1	L max 1) F2	M	S1	S3
EGG	2B	18	19.2	M15x1	8.5	27.0	37.0	1.8	13.5	17
EGG	3B	22	25.0	M18x1	11.5	30.0	37.0	2.0	16.5	22
EGG	4B	28	34.0	M25x1	12.0	34.5	38.5	2.5	23.5	30
EGG	5B	40	40.0	M35x1	11.0	36.5	38.0	3.0	33.5	–

Panel cut-out: **P1** (see page 45)

Note: 1) The overall length (L) may vary depending upon the type of electrical LV or fibre optic contact fitted.
The 5B series is delivered with a tapered washer and a round nut (see pages 94 and 95).

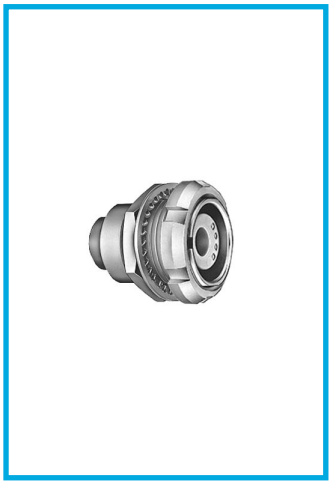

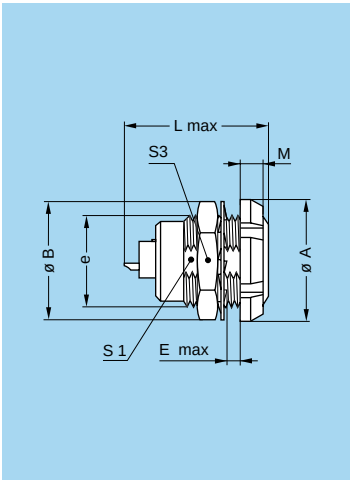

ECG Fixed socket, with two nuts, key (G) or keys (A…L and R), (back panel mounting)

Reference		Dimensions (mm)								
Model	Series	A	B	e	E	L max 1) F1	L max 1) F2	M	S1	S3
ECG	2B	20	19.2	M15x1	6.5	27.0	37.0	3.5	13.5	17
ECG	3B	24	25.0	M18x1	9.0	30.0	37.0	4.5	16.5	22
ECG	4B	30	34.0	M25x1	10.0	34.5	38.5	4.5	23.5	30
ECG	5B	41	40.0	M35x1	9.0	36.5	38.0	5.0	33.5	–

Panel cut-out: **P1** (see page 45)

Note: 1) The overall length (L) may vary depending upon the type of electrical LV or fibre optic contact fitted.
The 3B, 4B and 5B series are delivered with a conical nut. The 5B series is delivered with a tapered washer and a round nut (see pages 94 and 95).

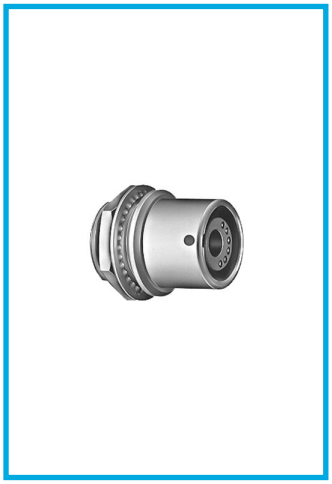

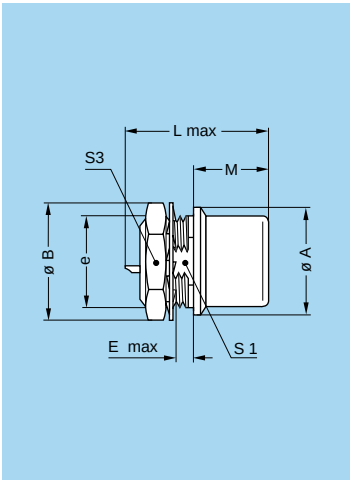

EHG Fixed socket, nut fixing, key (G) or keys (A…L and R), visible shell

Reference		Dimensions (mm)								
Model	Series	A	B	e	E	L max 1) F1	L max 1) F2	M	S1	S3
EHG	2B	18	19.2	M15x1	5.2	27.0	37.0	12.5	13.5	17
EHG	3B	22	25.0	M18x1	4.2	30.0	37.0	12.5	16.5	22
EHG	5B	40	40.0	M35x1	2.5	36.5	38.0	28.5	33.5	–

Panel cut-out: **P1** (see page 45)

Note: 1) The overall length (L) may vary depending upon the type of electrical LV or fibre optic contact fitted.
The 5B series is delivered without locking washer or tapered washer and with a round nut (see pages 94 and 95).

Plastic housing models

FGG, FGY, ENG and ENY plug and socket models are available with the outer shell and collet nut made with various insulating materials.

These connectors are particularly recommended for all applications requiring maximum electrical insulation when mated. The design, including a latch sleeve and a metal grounding crown, guarantees EMC screening efficiency to meet most requirements.

Technical Characteristics

Mechanical and Environmental

Characteristics	Value			Standard
	PEEK	PSU	PPSU	
Colour	natural (beige)	white or grey	cream	–
Endurance	> 5000 cycles	> 5000 cycles	> 5000 cycles	IEC 60512-5 test 9a
Humidity	up to 95% at 60°C			–
Temperature range	-50°C/+250°C	-50°C/+150°C	-50°C/+180°C	–
Sterilization resistance [1)]	~200 cycles	~20 cycles	~100 cycles	IEC 60601-1 § 44.7
Resistance to solvents	very good	limited	good	–

Note: [1)] Steam sterilization

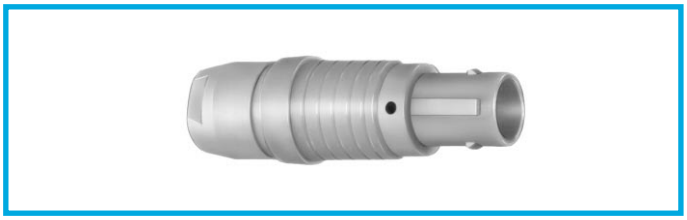

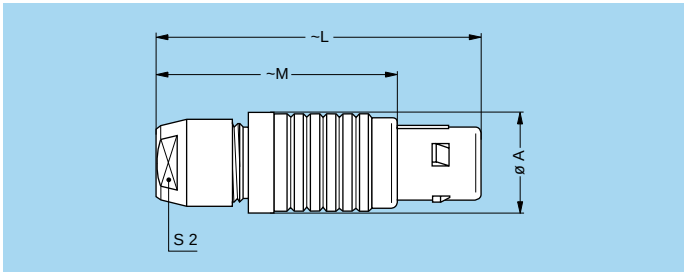

FGG Straight plug, key (G or J), cable collet, PEEK outer shell

Reference		Dimensions (mm)			
Model	Series	A	L	M	S2
FGG	3B	19.0	62.0	47.0	15
FGG	4B	26.0	78.5	60.5	20

Note: Model also available with a nut for fitting a bend relief.

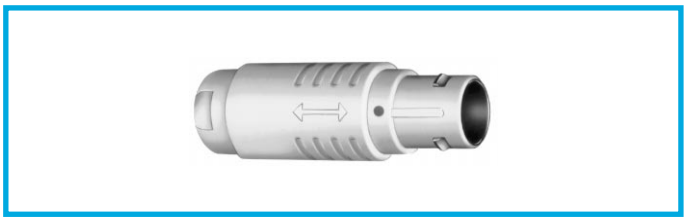

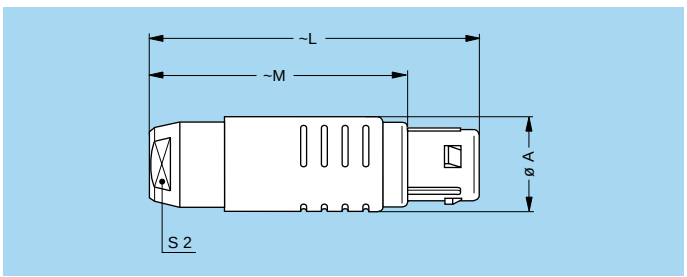

FGY Straight plug, keys (Y), cable collet and PSU or PPSU outer shell

Reference		Dimensions (mm)			
Model	Series	A	L	M	S2
FGY	2B	16.5	50.5	39.5	13
FGY	3B	19.0	58.0	43.0	15
FGY	4B	26.0	76.2	58.2	20

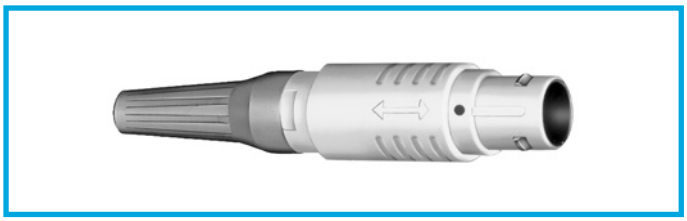

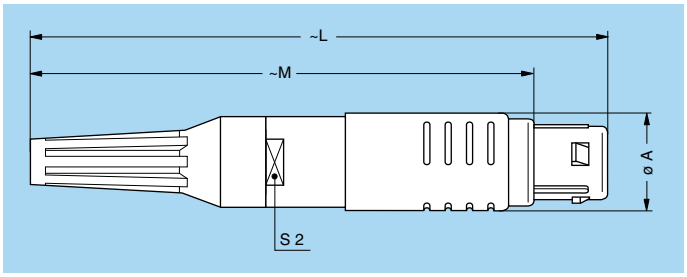

FGY Straight plug, keys (Y), cable collet and PSU or PPSU outer shell and nut for fitting a bend relief

Reference		Dimensions (mm)			
Model	Series	A	L	M	S2
FGY	2B	16.5	81	70	13
FGY	3B	19.0	94	79	15

Note: The bend relief must be ordered separately (see pages 61 and 91). The overall length dimension is with bend relief (see pages 91 and 92).



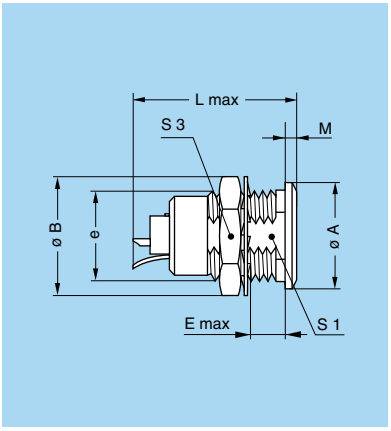

ENG Fixed socket with grounding tab, nut fixing, key (G or J), PEEK outer shell

Reference		Dimensions (mm)								
Model	Series	A	B	e	E	L max 1) F1	L max 1) F2	M	S1	S3
ENG	3B	22	25.0	M18x1	11.5	30.0	37.0	2.0	16.5	22
ENG	4B	28	34.0	M25x1	12.0	34.5	38.5	2.5	23.5	30

Panel cut-out: **P1** (see page 45)

Note: 1) The overall length (L) may vary depending upon the type of electrical LV or fibre optic contact fitted.



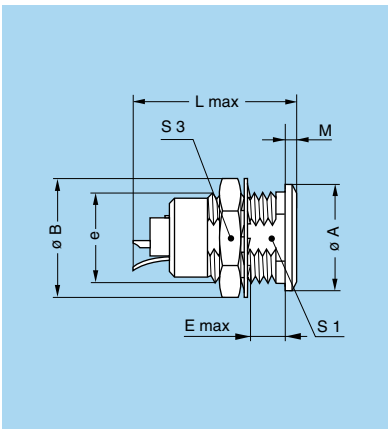

ENY Fixed socket with grounding tab, nut fixing, keys (Y), PSU or PPSU outer shell

Reference		Dimensions (mm)								
Model	Series	A	B	e	E	L max 1) F1	L max 1) F2	M	S1	S3
ENY	2B	18	19.2	M15x1	8.5	27.0	37.0	1.8	13.5	17
ENY	3B	22	25.0	M18x1	11.5	30.0	37.0	2.0	16.5	22
ENY	4B	28	34.0	M25x1	12.0	34.5	38.5	2.5	23.5	30

Panel cut-out: **P1** (see page 45)

Note: 1) The overall length (L) may vary depending upon the type of electrical LV or fibre optic contact fitted.

Note: Other models with plastic outer shell are available on request.

Tooling

Fibre optic contacts

The full range of tools for terminating fibre optic contacts F1 or F2 used with these 2B-5B series is shown on pages 103 to 106.
Consult the factory for the termination instructions.

Electrical contacts

The specific tools that may be used for the termination of crimp LV contacts or the type C coax contacts are shown on pages 100 to 102.

Panel Cut-Outs

P1

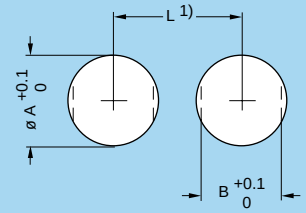

Series	Dimensions (mm)		
	A	B	L
2B	15.1	13.6	21.5
3B	18.2	16.6	27.0
4B	25.2	23.6	34.0
5B	35.2	33.6	44.0

Note: 1) Minimum distance between two neighbouring components.

Mounting torque

Series	Torque (Nm)		
	Metal shell	Metal shell with GRA insulating washer	Plastic shell
2B	6.0	0.8	0.8
3B	9.0	1.0	1.0
4B	12.0	5.0	5.0
5B	17.0	–	–

Note: The values shown in the table above are the maximum torque for each connector type.

2K-5K Series

The 2K-5K series connectors are designed to work with the LEMO **F1** or **F2** fibre optic contacts.
The main features of these series are as follows:
– Security of the LEMO Push-Pull self-latching system
– Specially designed for outdoors applications. All these models are waterproof when mated and reach a protection index of IP66-IP68, according to the IEC 60529 standard
– Protection against accidental contamination or damage to the fibre end face because the ferrules are recessed within the connector shell
– The alignment key (G, A…F, L and R) ensures excellent repeatability of performance during frequent matings
– A choice of configurations of multi fibre or hybrid optical/electrical contacts.

The 2K-5K series consists of ten models which will accept outer cable diameters ranging from 3.6 mm to 23.5 mm.
Depending upon the type of fibre optic contact chosen, the connectors can accommodate single-mode fibres in Si/Si 9/125 or multi-mode fibres in silica or plastic with dimensions reaching 1500 μm.

Interconnections

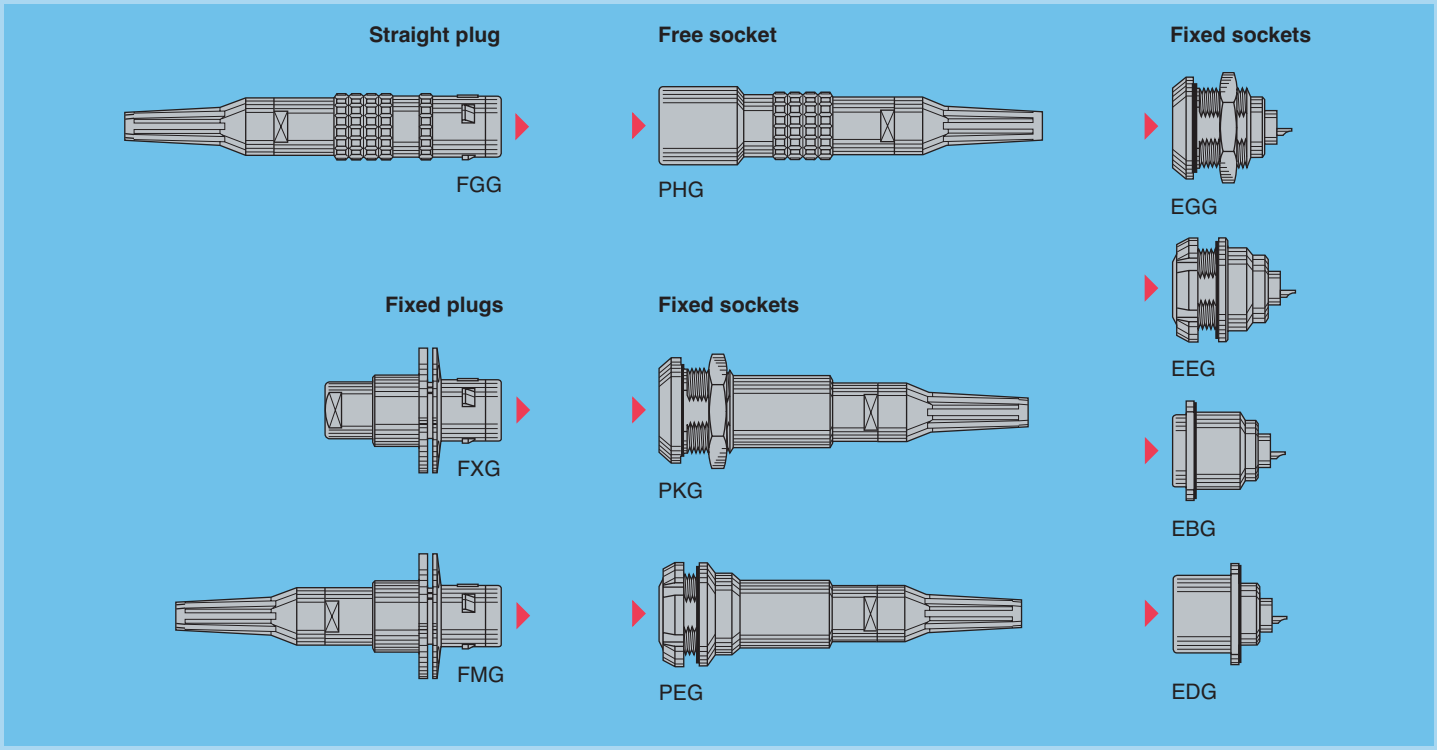

Model Description

EBG Fixed socket with square flange, key (G) or keys (A…F, L and R), four holes fixing
EDG Fixed socket with square flange, key (G) or keys (A…F, L and R), protruding shell and earthing tag, screw fixing
EEG Fixed socket, nut fixing, key (G) or keys (A…F, L and R) (back panel mounting)
EGG Fixed socket, nut fixing, key (G) or keys (A…F, L and R)
FGG Straight plug, key (G) or keys (A…F, L and R), cable adapter and nut for fitting a bend relief
FMG Fixed plug with round flange, four holes fixing, key (G) or keys (A…F, L and R), cable adapter and nut for fitting a bend relief
FXG Fixed plug with round flange, four holes fixing, key (G) or keys (A…F, L and R)
PEG Fixed socket, nut fixing, key (G) or keys (A…F, L and R), cable adapter and nut for fitting a bend relief (back panel mounting)
PHG Free socket, key (G) or keys (A…F, L and R), cable adapter and nut for fitting a bend relief
PKG Fixed socket, nut fixing, key (G) or keys (A…F, L and R), cable adapter and nut for fitting a bend relief

Part Section Showing Internal Components

Fixed socket

1. shell
2. grounding crown
3. retaining ring
4. hexagonal nut
5. insulator
6. female contact
7. o-ring

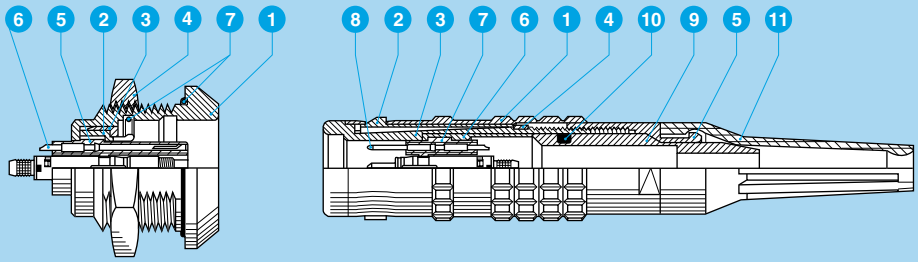

Straight plug

1. shell
2. latch sleeve
3. inner shell
4. circlip
5. collet nut
6. center-piece
7. insulator
8. male contact
9. cable adapter
10. o-ring
11. bend relief

Technical Characteristics

Mechanical and Environmental

Characteristics	Value	Standard
Mating durability	> 5000 cycles	IEC 60512-5 test 9a
Humidity	up to 95% at 60°C	
Temperature range	-50°C + 200°C	
Resistance to vibrations	10-2000 Hz, 15 g	IEC 60512-4 test 6d
Shock resistance	100 g, 6 ms	IEC 60512-4 test 6c
Salt spray corrosion test [1]	> 144h	IEC 60512-6 test 11f
Protection index (mated)	IP 68/IP 66	IEC 60529

Note: [1] The outer shells are in chrome-plated brass (Cr1).
The various tests have been carried out with FGG and EGG connector pairs, with chrome-plated brass shell, PEEK insulator and silicone O-ring.
Detailed electrical characteristics, as well as materials and treatment are presented in the chapter Technical Characteristics on page 107.

Electrical

Characteristics		Value	Standard
Shielding efficiency	at 10 MHz	> 95 dB	IEC 60169-1-3
	at 1 GHz	> 80 dB	IEC 60169-1-3

Optical

Note:
Detailed optical performances for F1 or F2 fibre optic contacts are given on pages 109 to 111.

Alignment Key and Polarized Keying Systems

Front view of a socket

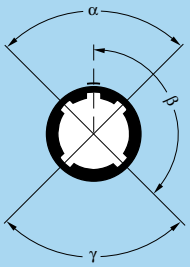

Model	No of keys	Angles	Series 2K	Series 3K	Series 4K	Series 5K	Type of electrical or fibre optic contact: Plug	Type of electrical or fibre optic contact: Socket	Note
●●G	1	α	0°	0°	0°	0°	male	female	●
●●A	2	α	30°	30°	30°	30°	male	female	●
●●B	2	α	45°	45°	45°	45°	male	female	●
●●C	2	α	60°	60°	60°	60°	male	female	●
●●D	2	γ	95°	95°	95°	95°	male	female	○
●●E	2	β	120°	120°	120°	120°	male	female	○
●●F	2	β	145°	145°	145°	145°	male	female	○
●●L	2	γ	75°	75°	75°	75°	female	male	●

Front view of a socket

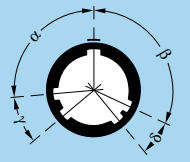

Model	No of keys	Angles	Series 2K	Series 3K	Series 4K	Series 5K	Type of electrical or fibre optic contact: Plug	Type of electrical or fibre optic contact: Socket	Note
●●R	5	α	–	95°	–	–	male	female	●
		β	–	115°	–	–			
		γ	–	35°	–	–			
		δ	–	25°	–	–			

● First choice alternative ○ Special order alternative

Part Number Example

A different part number structure is applicable for each of the following product types:
– Plugs and free sockets for assembly onto cables
– Fixed sockets.

Straight plug with bend relief

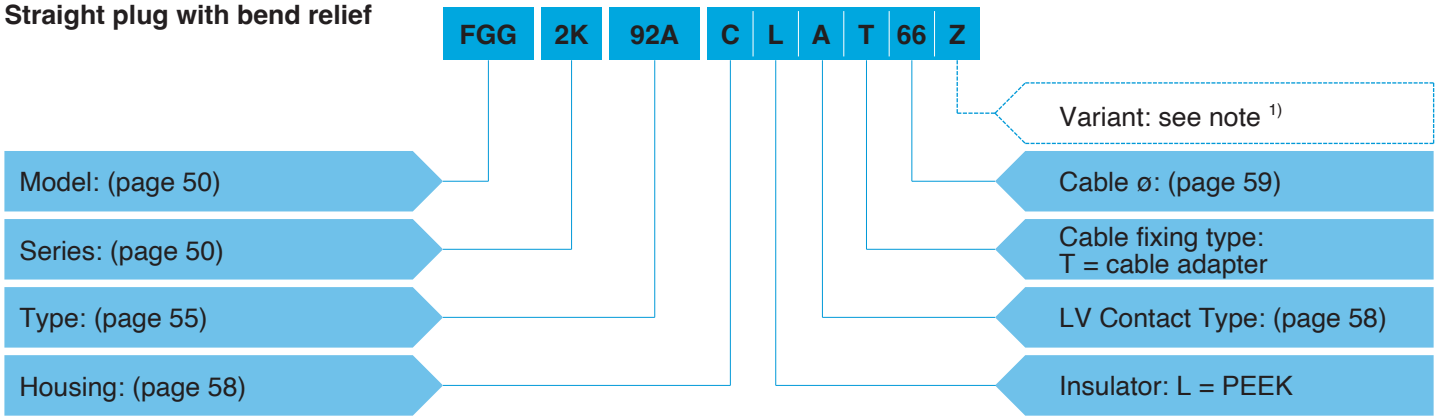

FGG.2K.92A.CLAT66Z = Straight plug with key (G), 2K series, hybrid type to accept 1 F2 type fibre optic contact and 2 low voltage contacts, chrome-plated brass housing, PEEK insulator, 2 male solder electrical contacts, cable fixing type T for 6.5 mm diameter cable, and nut for fitting a bend relief.

Free socket with bend relief

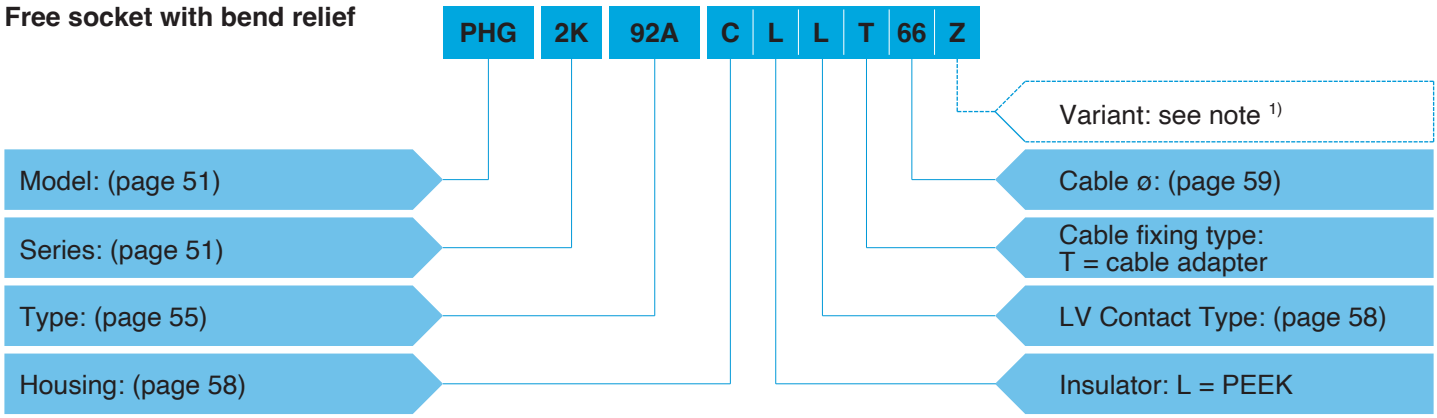

PHG.2K.92A.CLLT66Z = Free socket with key (G), 2K series, hybrid type to accept 1 F2 type fibre optic contact and 2 low voltage contacts, chrome-plated brass housing, PEEK insulator, 2 female solder electrical contacts, cable fixing type T for 6.5 mm diameter cable, and nut for fitting a bend relief.

Fixed socket

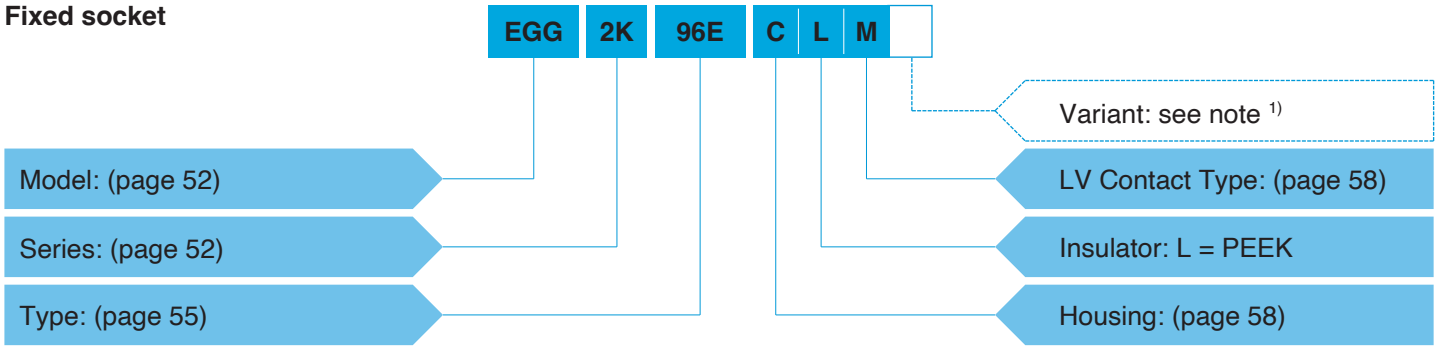

EGG.2K.96E.CLM = Fixed socket with key (G), 2K series, hybrid type to accept take 1 F1 type fibre optic contact and 6 low voltage contacts, chrome-plated brass housing, PEEK insulator, 6 female crimp electrical contacts.

Connectors are delivered without fibre optic contacts, therefore they must be ordered separately according to the size and type of fibre (see pages 77 and 79). In case of hybrid (with coax contacts type C), connectors are delivered without the coax contact. See page 58 for ordering.

Note: 1) The «Variant» position in the reference is used to indicate the presence of a collet nut for fitting the bend relief.
For models with the «T» type of cable adapter the «Z» should always be indicated and a bend relief can be ordered separately as indicated in the «Accessories» section. An order for a connector with bend relief should thus include two part numbers.

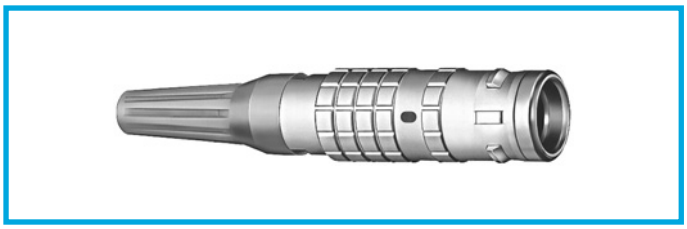

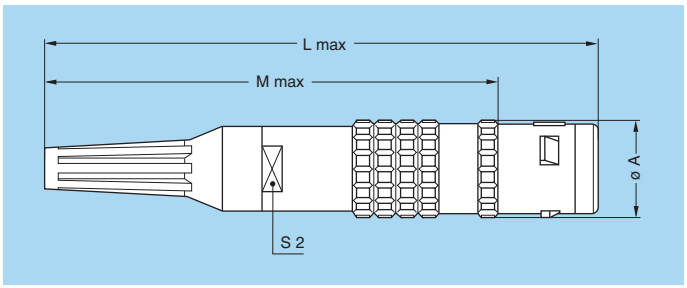

FGG Straight plug, key (G) or keys (A…F, L and R), cable adapter and nut for fitting a bend relief

Reference		Dimensions (mm)			
Model	Series	A	L	M	S2
FGG	2K	16	101	85.0	12
FGG	3K	19	109	89.0	15
FGG	4K	25	131	110.5	19
FGG	5K	38	160	135.0	30

Note:
The overall length dimension is with bend relief (see pages 91 and 92).

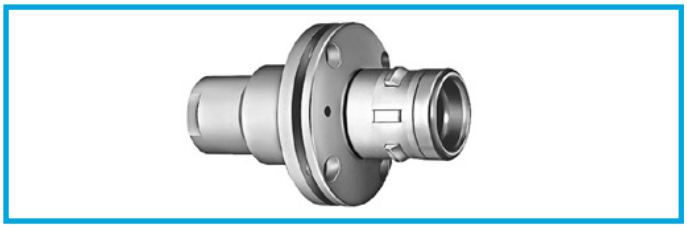

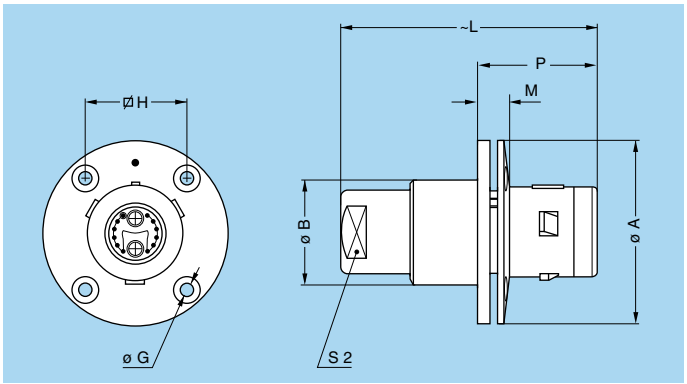

FXG Fixed plug with round flange, four holes fixing, key (G) or keys (A…F, L and R)

Reference		Dimensions (mm)							
Model	Series	A	B	G	H	L	M	P	S2
FXG	3K	38	22.5	3.4	20.6	61	10.0	30.0	15
FXG	4K	47	28.5	3.4	27.0	71	11.0	32.0	19
FXG	5K	65	42.5	4.4	38.0	100	12.5	38.5	30

Panel cut-out: **P2** (see page 53)

Note: This model does not include an O-ring behind the flange, it allows the device on which it is fitted to reach only IP50 protection index.
It does not have a cable adapter.

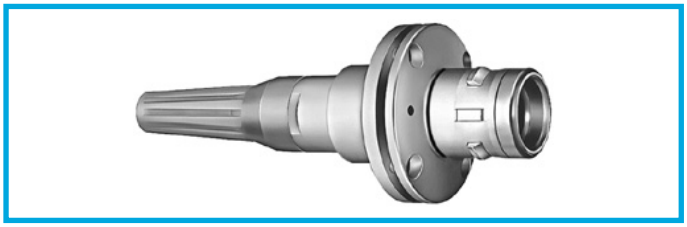

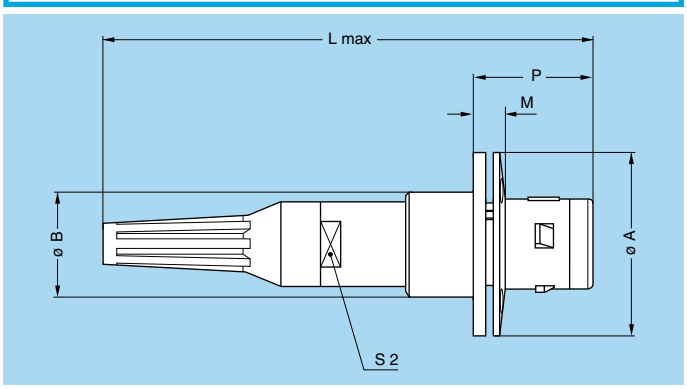

FMG Fixed plug with round flange, four hole fixing, key (G) or keys (A…F, L and R), cable adapter and nut for fitting a bend relief

Reference		Dimensions (mm)							
Model	Series	A	B	G[1)]	H[1)]	L	M	P	S2
FMG	3K	38	22.5	3.4	20.6	109.0	10.0	30.0	15
FMG	4K	47	28.5	3.4	27.0	131.0	11.0	32.0	19
FMG	5K	65	42.5	4.4	38.0	163.5	12.5	38.5	30

Panel cut-out: **P2** (see page 53)

Note: [1)] See FXG drawing for front view.
This model does not include an O-ring behind the flange, it allows the device on which it is fitted to reach only IP50 protection index.
The overall length dimension is with bend relief (see pages 91 and 92).

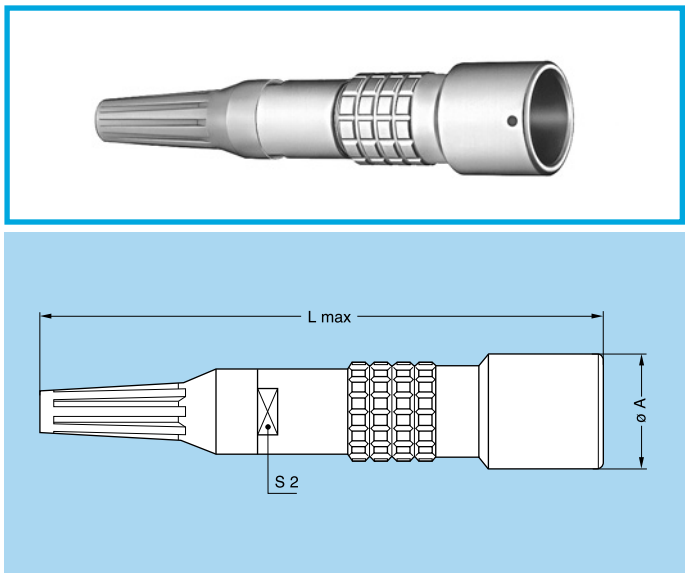

PHG Free socket, key (G) or keys (A…F, L and R), cable adapter and nut for fitting a bend relief

Reference		Dimensions (mm)		
Model	Series	A	L	S2
PHG	2K	19	103.0	12
PHG	3K	23	113.0	15
PHG	4K	29	135.5	19
PHG	5K	42	164.0	30

Note:
The overall length dimension is with bend relief (see pages 91 and 92).

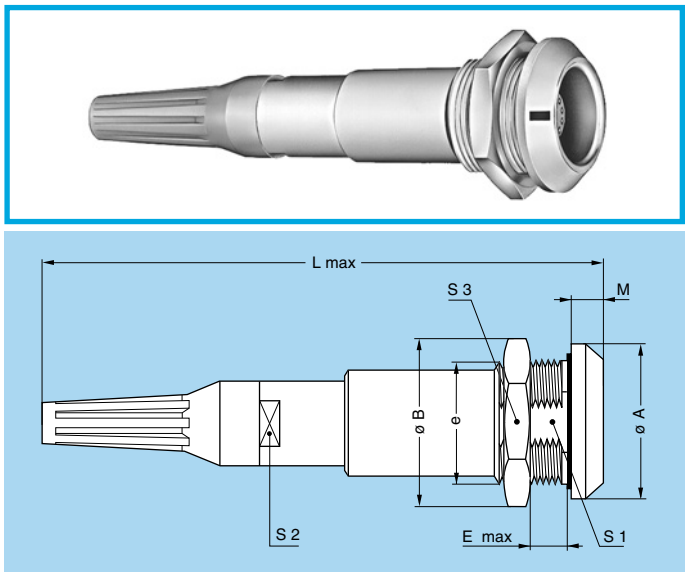

PKG Fixed socket, nut fixing, key (G) or keys (A…F, L and R) and cable adapter and nut for fitting a bend relief

Reference		Dimensions (mm)								
Model	Series	A	B	e	E	L	M	S1	S2	S3
PKG	2K	25	27.0	M20x1.0	9	103.0	5.0	18.5	12	24
PKG	3K	31	34.0	M24x1.0	11	113.0	6.0	22.5	15	30
PKG	4K	37	40.5	M30x1.0	9	135.5	6.5	28.5	19	36
PKG	5K	55	54.0	M45x1.5	15	164.0	9.0	42.5	30	–

Panel cut-out: **P1** (see page 53)

Note: The 5K series is delivered with a round nut (see page 95).
The overall length dimension is with bend relief (see pages 91 and 92).

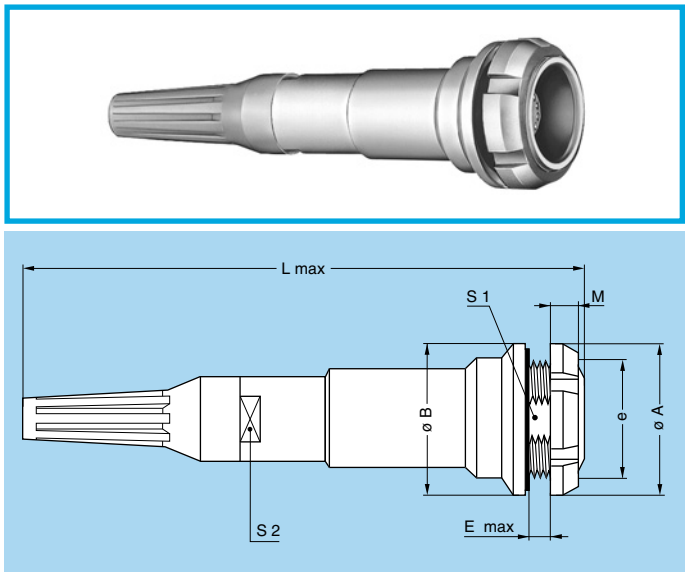

PEG Fixed socket, nut fixing, key (G) or keys (A…F, L and R), cable adapter and nut for fitting a bend relief
(back panel mounting)

Reference		Dimensions (mm)							
Model	Series	A	B	e	E	L	M	S1	S2
PEG	2K	25	25	M20x1.0	4.0	103	3.5	18.5	12
PEG	3K	30	31	M24x1.0	7.5	113	4.5	22.5	15

Panel cut-out: **P1** (see page 53)

Note: The 3K series is delivered with a conical nut (see page 95).
The overall length dimension is with bend relief (see pages 91 and 92).



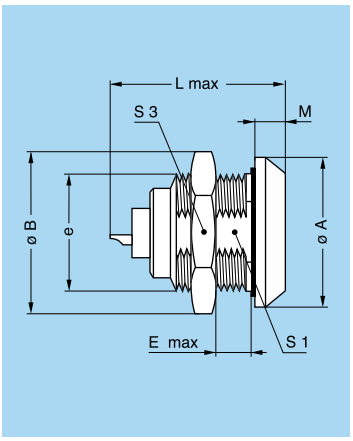

EGG Fixed socket, nut fixing, key (G) or keys (A…F, L and R)

Reference		Dimensions (mm)								
Model	Series	A	B	e	E	L max 1) F1	L max 1) F2	M	S1	S3
EGG	2K	25	27.0	M20x1.0	9	31.0	41.0	5.0	18.5	24
EGG	3K	31	34.0	M24x1.0	11	35.5	42.5	6.0	22.5	30
EGG	4K	37	40.5	M30x1.0	9	37.0	41.0	6.5	28.5	36
EGG	5K	55	54.0	M45x1.5	10	40.5	42.0	9.0	42.5	–

Panel cut-out: **P1** (see page 53)

Note: 1) The overall length (L) may vary depending upon the type of electrical LV or fibre optic contact fitted.
The 5K series is delivered with a round nut (see page 95).



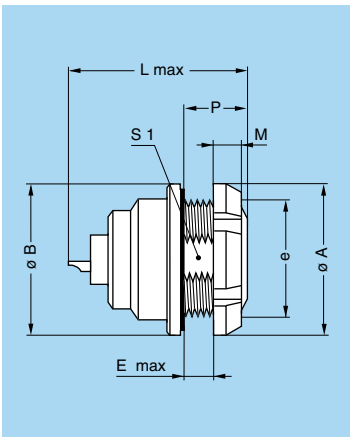

EEG Fixed socket, nut fixing, key (G) or keys (A…F, L and R) (back panel mounting)

Reference		Dimensions (mm)								
Model	Series	A	B	e	E	L max 1) F1	L max 1) F2	M	P	S1
EEG	2K	25	25	M20x1	5.0	31.0	41.0	3.5	10	18.5
EEG	3K	30	31	M24x1	7.5	35.5	42.5	4.5	12	22.5

Panel cut-out: **P1** (see page 53)

Note: 1) The overall length (L) may vary depending upon the type of electrical LV or fibre optic contact fitted.
The 3K series is delivered with a conical nut (see page 95).

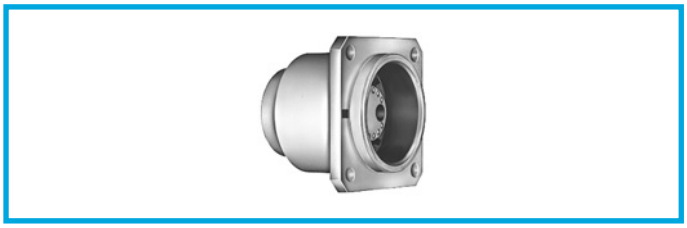

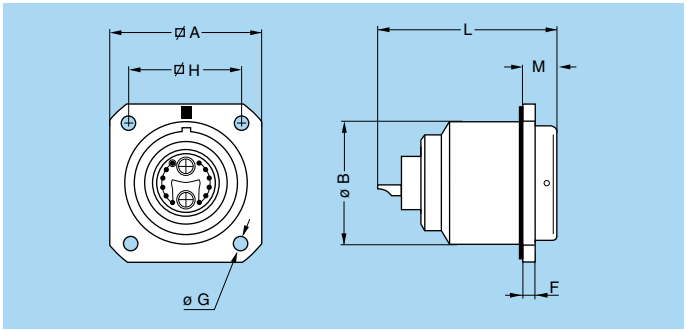

EBG Fixed socket with square flange, key (G) or keys (A…F, L and R), four holes fixing

Reference		Dimensions (mm)							
Model	Series	A	B	F	G	H	L max 1) F1	L max 1) F2	M
EBG	3K	29	23	3	3.4	23	35.5	42.5	6.0
EBG	4K	37	30	3	3.4	29	37.0	41.0	6.5

Panel cut-out: **P3** (see page 53)

Note: 1) The overall length (L) may vary depending upon the type of electrical LV or fibre optic contact fitted.

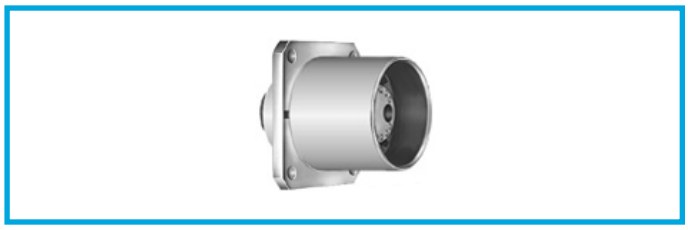

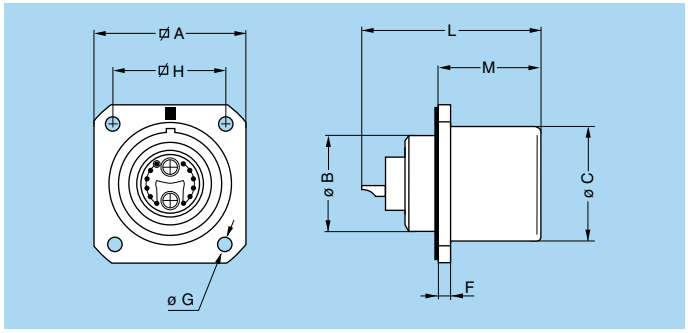

EDG Fixed socket with square flange, key (G) or keys (A…F, L and R), protruding shell and earthing tag, screw fixing

Reference		Dimensions (mm)								
Model	Series	A	B	C	F	G	H	L max 1) F1	L max 1) F2	M
EDG	3K	29	18	23	3	3.4	23	35.5	42.5	22.5

Panel cut-out: **P4** (see page 53)

Note: 1) The overall length (L) may vary depending upon the type of electrical LV or fibre optic contact fitted.

Tooling

Fibre optic contacts

The full range of tools for terminating fibre optic contacts F1 or F2 used with these 2K-5K series is shown on pages 103 to 106.
Consult the factory for the termination instructions.

Electrical contacts

The specific tools that may be used for the termination of crimp LV contacts or the type C coax contacts are shown on pages 100 to 102.

Panel Cut-Outs

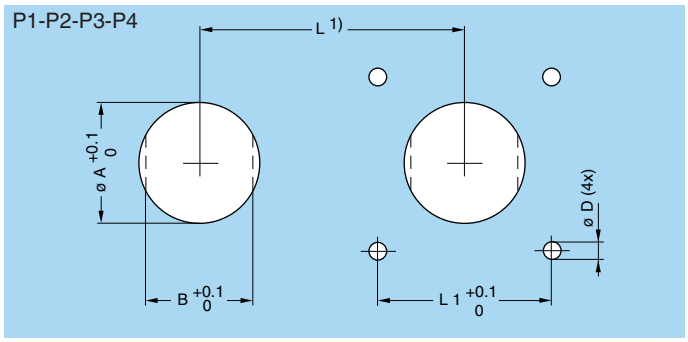

Series	P1			P2			
	ø A	B	L	ø A	D	L	L1
2K	20.2	18.6	29.0	–	–	–	–
3K	24.2	22.6	35.5	22.6	M3	40.0	20.6
4K	30.2	28.6	43.0	28.6	M3	49.0	27.0
5K	45.2	42.6	57.0	42.6	M4	67.0	38.0

Series	P3				P4			
	ø A	D	L	L1	ø A	D	L	L1
3K	23.1	M3	31.0	23.0	18.1	M3	31.0	23.0
4K	30.1	M3	39.0	29.0	–	–	–	–

Note: 1) Minimum distance between two neighbouring components.

Mounting torque

Series	Torque (Nm)	
	Nut	Screws
2K	9	–
3K	12	1 to 2 1)
4K	17	1 to 2 1)
5K	22	1 to 2 1)

Note: 1) Depends on screw material selected. The values shown in the table above are the maximum torque for each connector type.

Cut-out types

Model	Type
EBG	P3
EDG	P4
EEG	P1
EGG	P1

Model	Type
FMG	P2
FXG	P2
PEG	P1
PKG	P1

Types

Multi fibre and Hybrid fibre optic (F1 or F2 contact) + LV

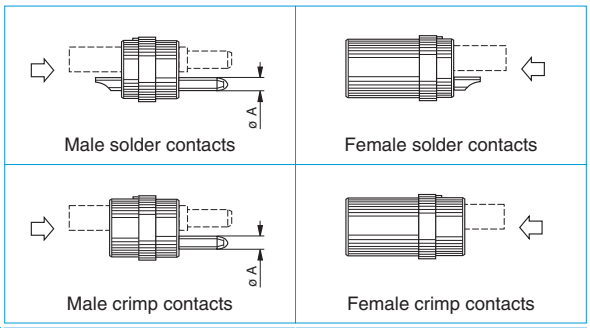

	Reference FO Contact Type		Fibre optic No	Low Voltage contact									
						Contact type		Solder contact		Crimp contact		
	F1	F2		Contact No	ø A (mm)	Solder	Crimp	Test voltage (kV rms)[1] Contact-contact	Test voltage (kV rms)[1] Contact-shell	Test voltage (kV rms)[1] Contact-contact	Test voltage (kV rms)[1] Contact-shell	Rated current (A)
2B 2K	96A	92A	1	2	0.9	●	●	1.75	1.60	1.85	1.60	9.0
	96C	92C	1	4	0.7	●	●	0.85	1.20	0.85	1.25	6.0
	96E	92E	1	6	0.7	●	●	0.85	1.20	0.85	1.25	6.0
	96J	92J	1	10	0.7	●	●	1.15	1.35	1.30	1.05	6.0
3B 3K	07A	03A	2	–	–	–	–	–	–	–	–	–
	97C	93B	2	4	0.9	●	●	1.20	1.05	1.00	0.80	8.0
	97E	93E	2	6	0.9	●	●	1.20	1.05	1.00	0.80	8.0
	97J	93J	2	10	0.7	●	●	0.95	0.75	0.85	0.65	6.0
	97R	93R	2	16	0.7	●	●	0.80	0.70	0.80	0.75	5.5
	96X	92X	1	22	0.7	●	●	0.80	0.70	0.80	0.75	5.0
4B 4K	07C	03C	4	–	–	–	–	–	–	–	–	–
	–	95D	4	5	1.3	●	●	1.20	1.30	1.30	1.05	13
	99H	–	4	9	0.7	●	●	1.00	1.00	0.80	0.80	8
	98E	94E	3	6	0.7	●	●	0.90	0.95	0.80	0.80	8
	98L	94L	3	12	0.7	●	●	0.90	0.95	0.80	0.80	6
	–	93E	2	2 4	0.9 1.3	–	●	–	–	1.90 1.85	1.60 2.55	8 12

● First choice alternative ○ Special order alternative **Note: [1] See calculation method, caution and suggested standard on page 114.**

Multi fibre and Hybrid fibre optic (F1 or F2 contact) + LV

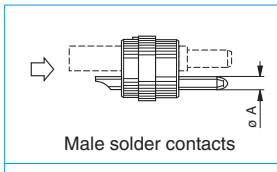

Male solder contacts

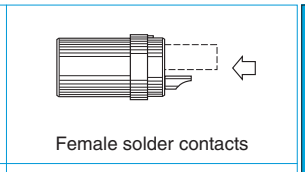
Female solder contacts

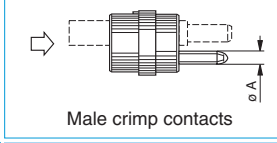

Male crimp contacts

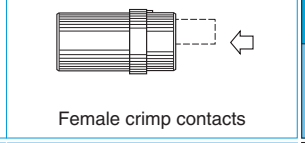
Female crimp contacts

	Reference FO Contact Type		Fibre optic No	Low Voltage contact								
						Contact type		Solder contact		Crimp contact		
	F1	F2		Contact No	ø A (mm)	Solder	Crimp	Test voltage (kV rms)[1] Contact-contact	Test voltage (kV rms)[1] Contact-shell	Test voltage (kV rms)[1] Contact-contact	Test voltage (kV rms)[1] Contact-shell	Rated current (A)
4B 4K	97F	–	2	3 4	0.9 1.3	–	●	–	–	1.15 1.85	1.50 2.55	8 12
	97L	93L	2	12	0.9	●	●	0.95	0.85	0.90	1.20	10
	97R	93R	2	16	0.9	●	●	0.95	0.85	0.85	0.85	10
	97T	93T	2	18	0.7	●	●	0.90	0.95	0.85	0.75	8
5B 5K	07J	03J	10	–	–	–	–	–	–	–	–	–
	–	03N	14	–	–	–	–	–	–	–	–	–
	–	99B	9	1 2	4 2	●	–	2.55 2.55	2.05 2.05	–	–	35 18
	–	94B	3	10	2	●	●	2.10	2.00	2.05	1.75	18

● First choice alternative ○ Special order alternative **Note: [1] See calculation method, caution and suggested standard on page 114.**

Note: The above mentioned multi fibre and hybrid fibre optic + LV connectors are delivered **without** fibre optic contacts (See pages 77 and 79 for ordering).

Hybrid fibre optic (F2 contact) + HV + LV

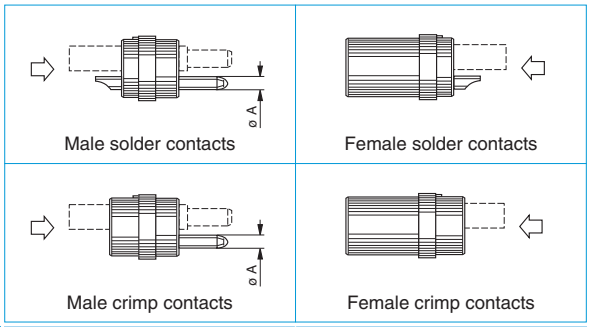

	Reference	Fibre optic F2 No	High Voltage contact							Low Voltage contact						
			Contact No	ø A (mm)	Cont type: Crimp	Crimp contact: Test voltage (kV rms)[1] Contact-contact	Crimp contact: Test voltage (kV rms)[1] Contact-shell	Rated current (A)		Contact No	ø A (mm)	Contact type: Solder	Contact type: Crimp	Solder/crimp cont.: Test voltage (kV rms)[1] Contact-contact	Solder/crimp cont.: Test voltage (kV rms)[1] Contact-shell	Rated current (A)
3K	93C	2	2	1.3	●	2.25	2.25	10		2	0.9	–	●	1.00	1.00	3
5B 5K	90C	6	4	1.6	●	2.05	1.75	15		2	1.3	●	–	1.85	2.55	8
	956	12	2	1.6	●	2.05	1.75	18		1	2.0	–	●	2.05	1.75	19

● First choice alternative ○ Special order alternative **Note: [1] See calculation method, caution and suggested standard on page 114.**

Note: The above mentioned hybrid fibre optic + HV + LV connectors are delivered **without** fibre optic contacts (See page 79 for ordering).
More informations about the 3K.93C series are detailed on page 71.

Hybrid fibre optic (F2 contact) + coaxial + LV

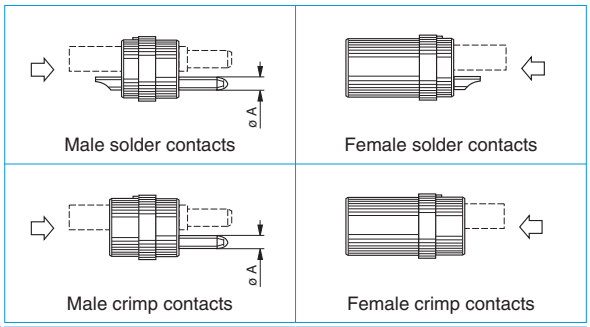

	Reference	Fibre optic F2 No	Coaxial contact				Low Voltage contact									
			Contact No	Impedance (Ω)	Type	Cable group	Contact No	ø A (mm)	Contact type: Solder	Contact type: Crimp	Solder contact: Test voltage (kV rms)[1] Contact-contact	Solder contact: Test voltage (kV rms)[1] Contact-shell	Crimp contact: Test voltage (kV rms)[1] Contact-contact	Crimp contact: Test voltage (kV rms)[1] Contact-shell	Rated current (A)
3B 3K	82E	1	1	50	C	1 2 3	6	0.9	●	●	1.30	1.20	0.85	0.95	10
	82R	1	1	50	C	1 2 3	16	0.7	●	●	0.85	0.85	0.60	0.80	6
4B 4K	05C	2	2	50	C	1 2 3	–	–	–	–	–	–	–	–	–
	88E	2	1	50	C	1 2 3	6	0.7	●	●	1.05	1.05	0.80	0.80	3

● First choice alternative ○ Special order alternative **Note: [1] See calculation method, caution and suggested standard on page 114.**

Note: The above mentioned hybrid fibre optic + coaxial + LV connectors are delivered **without** coax contacts (See page 58 for ordering).
Other configurations are available. All insulators designed for F1 F.O. contacts can accept both F1 F.O. or type C coax contacts.

Housing

Ref.	Material	Surface treatment		Note
		Outer shell and collet nut	Latch sleeve and grounding crown	
C	Brass	chrome	nickel	●
N	Brass	nickel	nickel	○
K	Brass	black chrome	nickel	●
T	Stainless steel	without treatment	stainless steel	○
L	Aluminium alloy[1)]	anodized	nickel-plated brass	○
G	PEEK[2)]	without treatment	nickel-plated brass	●
P	PSU[3)]	without treatment	nickel-plated brass	●
R	PPSU[4)]	without treatment	nickel-plated brass	●

Note: Detailed characteristics of these materials and treatments are presented on page 107.
1) The «variant» position of the reference is used to specify the anodized colour.
2) Only available for FGG and ENG models of the B series.
3) Only available for ENY and FGY models of the B series. For the colour, see the «variant» position.
4) Only available for ENY and FGY models of the B series.

● First choice alternative ○ Special order alternative

Coaxial Contact



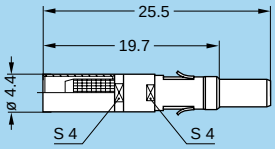

FFS Male coaxial contact type C

Part number	Cable group[1)]
FFS.2B.250.ZTCE24	2
FFS.2B.250.ZTCE30	1
FFS.2B.250.ZTCE31	3

Note: 1) See page 9 for cable group.

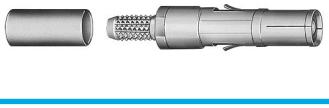

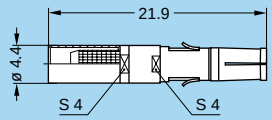

PSS Female coaxial contact type C

Part number	Cable group[1)]
PSS.2B.250.ZTME24	2
PSS.2B.250.ZTME30	1
PSS.2B.250.ZTME31	3

Note: 1) See page 9 for cable group.

Note: Detailed characteristics of these contacts are presented on page 113.

Electrical Contact

Contact for plug, socket, and fixed socket

Ref.	Contact type
A	male solder
C	male crimp
L	female solder
M	female crimp
Z	no contact

Collets (B and K series)

D and M type collets

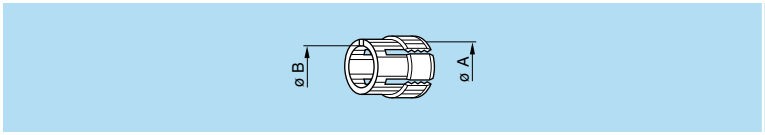

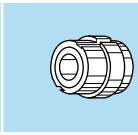
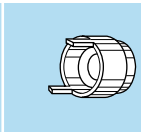
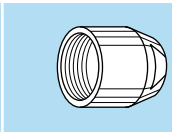

	Reference		Collet ø				Collet part number [1]	Cable ø Reducer part number [2]	Reducing cone part number [2]	Collet nut part number
	Type	ø	ø A	ø B	max.	min.				
2B	M	21	2.1	–	2.2	1.4	FGG.0B.722.DN	FGG.2B.138.LN	FGG.2B.158.LN	FGG.2B.130.LC
	M	31	3.1	–	3.2	> 2.2	FGG.0B.732.DN	FGG.2B.138.LN	FGG.2B.158.LN	FGG.2B.130.LC
	D	42	4.2	–	4.2	> 3.2	FGG.0B.742.DN	FGG.2B.138.LN	FGG.2B.158.LN	FGG.2B.130.LC
	D	52	5.2	–	5.2	> 4.2	FGG.2B.752.DN	–	–	FGG.2B.130.LC
	D	62	6.2	–	6.2	> 5.2	FGG.2B.762.DN	–	–	FGG.2B.130.LC
	D	72	7.2	–	7.2	> 6.2	FGG.2B.772.DN	–	–	FGG.2B.130.LC
	D	82	8.2	–	8.2	> 7.2	FGG.2B.782.DN	–	–	FGG.2B.130.LC
	D	92	9.2	8.6	9.2	> 8.2	FGG.2B.792.DN	–	–	FGG.2B.130.LC
	D	99	9.9	8.6	9.9	> 9.2	FGG.2B.799.DN [3]	–	–	FGG.2B.132.LC
3B	M	52	5.2	–	5.2	> 4.2	FGG.1B.752.DN	FGG.3B.138.LN	FGG.3B.158.LN	FGG.3B.130.LC
	D	62	6.2	–	6.2	4.9	FGG.3B.762.DN	–	–	FGG.3B.130.LC
	D	72	7.2	–	7.7	> 6.2	FGG.3B.777.DN	–	–	FGG.3B.130.LC
	D	92	9.2	–	9.2	> 7.7	FGG.3B.792.DN	–	–	FGG.3B.130.LC
	D	10	10.2	–	10.0	> 9.2	FGG.3B.710.DN	–	–	FGG.3B.130.LC
	D	12	12.0	10.2	12.0	> 11.0	FGG.3B.712.DN [3]	–	–	FGG.3B.132.LC
4B	M	62	6.2	–	6.2	4.9	FGG.2B.762.DN	FGG.4B.138.LN	FGG.4B.158.LN	FGG.4B.130.LC
	M	72	7.2	–	7.7	> 6.2	FGG.2B.772.DN	FGG.4B.138.LN	FGG.4B.158.LN	FGG.4B.130.LC
	M	92	9.2	8.6	9.2	> 7.7	FGG.2B.792.DN	FGG.4B.138.LN	FGG.4B.158.LN	FGG.4B.130.LC
	D	10	10.8	–	10.5	9.1	FGG.4B.710.DN	–	–	FGG.4B.130.LC
	D	12	12.3	–	12.0	10.6	FGG.4B.712.DN	–	–	FGG.4B.130.LC
	D	13	13.8	12.5	13.5	12.1	FGG.4B.713.DN	–	–	FGG.4B.130.LC
	D	15	15.3	12.5	15.0	13.6	FGG.4B.715.DN	–	–	FGG.4B.130.LC
	D	16	16.3	12.5	16.0	15.1	FGG.4B.716.DN [3]	–	–	FGG.4B.132.LC
5B	D	11	11.8	–	11.5	9.6	FGG.5B.711.DN	–	–	FGG.5B.130.LC
	D	13	13.8	–	13.5	11.6	FGG.5B.713.DN	–	–	FGG.5B.130.LC
	D	15	15.8	–	15.5	13.6	FGG.5B.715.DN	–	–	FGG.5B.130.LC
	D	17	17.8	–	17.5	15.6	FGG.5B.717.DN [3]	–	–	FGG.5B.130.LC
	D	19	19.8	–	19.5	17.6	FGG.5B.719.DN [3]	–	–	FGG.5B.130.LC
	D	21	21.8	–	21.5	19.6	FGG.5B.721.DN [3]	–	–	FGG.5B.130.LC
	D	23	23.8	21.8	23.5	21.6	FGG.5B.723.DN [3]	–	–	FGG.5B.130.LC
	D	25	25.3	21.8	25.0	23.6	FGG.5B.725.DN [3]	–	–	FGG.5B.132.LC

Note:
[1] For ordering collet separately.
[2] For ordering an M type collet, a reducer and its reducing cone should also be ordered.
[3] These collets cannot be used for connector models with collet nut for fitting a bend relief.

All dimensions are in millimeters.

Bend relief collet nut and bend relief

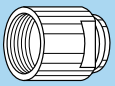
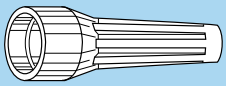

	Reference		Collet nut part number	Bend relief to be used [1]
	Type	ø		
2B	M	21 and 31	FFM.2B.132.LC	GMA.0B.●●●.●●
	D	42	FFM.2B.130.LC	GMA.2B.●●●.●●
	D	52 to 92	FFM.2B.130.LC	GMA.2B.●●●.●●
3B	M	52	FFM.3B.131.LC	GMA.1B.●●●.●●
	D	62 to 10	FFM.3B.130.LC	GMA.3B.●●●.●●
4B	M	62 and 72	FFM.4B.132.LC	GMA.2B.●●●.●●
	M	92	FFM.4B.130.LC	GMA.4B.●●●.●●
	D	10 to 15	FFM.4B.130.LC	GMA.4B.●●●.●●
5B	D	11 to 15	FFM.5B.130.LC	GMA.4B.●●●.●●

Note: [1] The bend relief is to be ordered separately (see pages 91 and 92).

All dimensions are in millimeters.

T type cable adapter

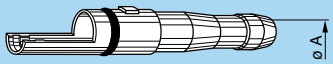

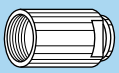
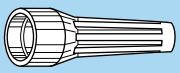

	Reference		Adapter ø A	Cable ø		Adapter with gasket part number	Collet nut part number	Bend relief to be used [1]	Note
	Type	ø		max.	min.				
2K	T	46	4.6	4.5	3.6	FGG.2K.846.TNS	FFM.2K.130.LC	GMA.2B.040.D●	●
	T	51	5.1	5.0	4.1	FGG.2K.851.TNS	FFM.2K.130.LC	GMA.2B.045.D●	○
	T	56	5.6	5.5	4.6	FGG.2K.856.TNS	FFM.2K.130.LC	GMA.2B.050.D●	●
	T	61	6.1	6.0	5.1	FGG.2K.861.TNS	FFM.2K.130.LC	GMA.2B.057.R●	○
	T	66	6.6	6.5	5.6	FGG.2K.866.TNS	FFM.2K.130.LC	GMA.2B.060.D●	●
3K	T	46	4.6	4.5	3.6	FGG.3K.846.TNS	FFM.3K.134.LC	GMA.2B.040.D●	●
	T	51	5.1	5.0	4.1	FGG.3K.851.TNS	FFM.3K.134.LC	GMA.2B.045.D●	○
	T	56	5.6	5.5	4.6	FGG.3K.856.TNS	FFM.3K.134.LC	GMA.2B.050.D●	●
	T	61	6.1	6.0	5.1	FGG.3K.861.TNS	FFM.3K.134.LC	GMA.2B.057.R●	○
	T	66	6.6	6.5	5.6	FGG.3K.866.TNN	FFM.3K.134.LC	GMA.2B.060.D●	●
	T	71	7.1	7.0	6.1	FGG.3K.871.TNN	FFM.3K.130.LC	GMA.3B.060.D●	●
	T	76	7.6	7.5	6.6	FGG.3K.876.TNN	FFM.3K.130.LC	GMA.3B.070.D●	●
	T	81	8.1	8.0	7.1	FGG.3K.881.TNN	FFM.3K.130.LC	GMA.3B.070.D●	○
	T	86	8.6	8.5	7.6	FGG.3K.886.TNN	FFM.3K.130.LC	GMA.3B.080.D●	●
	T	91	9.1	9.0	8.1	FGG.3K.891.TNN	FFM.3K.130.LC	GMA.3B.080.D●	●
4K	T	46	4.6	4.5	3.6	FGG.4K.846.TNS	FFM.4K.132.LC	GMA.2B.040.D●	●
	T	51	5.1	5.0	4.1	FGG.4K.851.TNS	FFM.4K.132.LC	GMA.2B.045.D●	●
	T	56	5.6	5.5	4.6	FGG.4K.856.TNS	FFM.4K.132.LC	GMA.2B.050.D●	●
	T	61	6.1	6.0	5.1	FGG.4K.861.TNS	FFM.4K.132.LC	GMA.2B.057.R●	○
	T	66	6.6	6.5	5.6	FGG.4K.866.TNS	FFM.4K.132.LC	GMA.2B.060.D●	●
	T	71	7.1	7.0	6.1	FGG.4K.871.TNS	FFM.4K.133.LC	GMA.3B.060.D●	●
	T	76	7.6	7.5	6.6	FGG.4K.876.TNS	FFM.4K.133.LC	GMA.3B.070.D●	●
	T	81	8.1	8.0	7.1	FGG.4K.881.TNS	FFM.4K.133.LC	GMA.3B.070.D●	○
	T	86	8.6	8.5	7.6	FGG.4K.886.TNS	FFM.4K.133.LC	GMA.3B.080.D●	●
	T	91	9.1	9.0	8.1	FGG.4K.891.TNS	FFM.4K.133.LC	GMA.3B.080.D●	○
	T	96	9.6	9.5	8.6	FGG.4K.896.TNS	FFM.3K.132.LC	GMA.4B.010.D● [2]	●
	T	10	10.6	10.5	9.6	FGG.4K.810.TNS	FFM.3K.132.LC	GMA.4B.010.D●	●
	T	11	11.6	11.5	10.6	FGG.4K.811.TNS	FFM.3K.132.LC	GMA.4B.011.D●	●
	T	12	12.6	12.5	11.6	FGG.4K.812.TNS	FFM.3K.132.LC	GMA.4B.012.D●	●
	T	13	13.6	13.5	12.6	FGG.4K.813.TNS	FFM.3K.132.LC	GMA.4B.013.D●	●

Note: [1] The bend relief is to be ordered separately (see pages 91 and 92).
[2] Add a short piece of heat-shrink tubing under the bend relief.

● First choice alternative ○ Special order alternative

T type cable adapter



	Reference		Adapter ø A	Cable ø		Adapter with gasket part number	Collet nut part number	Bend relief to be used [1]	Note
	Type	ø		max.	min.				
5K	T	46	4.6	4.5	3.6	FGG.5K.846.TNS	FFM.5K.132.LC	GMA.2B.040.D●	○
	T	51	5.1	5.0	4.1	FGG.5K.851.TNS	FFM.5K.132.LC	GMA.2B.045.D●	○
	T	56	5.6	5.5	4.6	FGG.5K.856.TNS	FFM.5K.132.LC	GMA.2B.050.D●	○
	T	61	6.1	6.0	5.1	FGG.5K.861.TNS	FFM.5K.132.LC	GMA.2B.057.R●	●
	T	66	6.6	6.5	5.6	FGG.5K.866.TNS	FFM.5K.132.LC	GMA.2B.060.D●	●
	T	71	7.1	7.0	6.1	FGG.5K.871.TNS	FFM.5K.131.LC	GMA.3B.060.D●	●
	T	76	7.6	7.5	6.6	FGG.5K.876.TNS	FFM.5K.131.LC	GMA.3B.070.D●	○
	T	81	8.1	8.0	7.1	FGG.5K.881.TNS	FFM.5K.131.LC	GMA.3B.070.D●	●
	T	86	8.6	8.5	7.6	FGG.5K.886.TNS	FFM.5K.131.LC	GMA.3B.080.D●	○
	T	91	9.1	9.0	8.1	FGG.5K.891.TNS	FFM.5K.131.LC	GMA.3B.080.D●	●
	T	96	9.6	9.5	8.6	FGG.5K.896.TNS	FFM.5K.133.LC	GMA.4B.010.D● [2]	○
	T	10	10.6	10.5	9.6	FGG.5K.810.TNS	FFM.5K.133.LC	GMA.4B.010.D●	●
	T	11	11.6	11.5	10.6	FGG.5K.811.TNS	FFM.5K.133.LC	GMA.4B.011.D●	●
	T	12	12.6	12.5	11.6	FGG.5K.812.TNS	FFM.5K.133.LC	GMA.4B.012.D●	●
	T	13	13.6	13.5	12.6	FGG.5K.813.TNS	FFM.5K.133.LC	GMA.4B.013.D●	○
	T	14	14.6	14.5	13.6	FGG.5K.814.TNS	FFM.5K.133.LC	GMA.4B.013.D●	●
	T	15	15.6	15.5	14.6	FGG.5K.815.TNS	FFA.5K.131.LC	heat-shrink tube [3]	●
	T	16	16.6	16.5	15.6	FGG.5K.816.TNS	FFA.5K.131.LC	heat-shrink tube	●
	T	17	17.6	17.5	16.6	FGG.5K.817.TNS	FFA.5K.131.LC	heat-shrink tube	●
	T	18	18.6	18.5	17.6	FGG.5K.818.TNS	FFA.5K.134.LC	heat-shrink tube	●
	T	19	19.6	19.5	18.6	FGG.5K.819.TNS	FFA.5K.134.LC	heat-shrink tube	●
	T	20	20.6	20.5	19.6	FGG.5K.820.TNS	FFA.5K.134.LC	heat-shrink tube	●
	T	21	21.6	21.5	20.6	FGG.5K.821.TNS	FFA.5K.132.LC	heat-shrink tube	●
	T	22	22.6	22.5	21.6	FGG.5K.822.TNS	FFA.5K.132.LC	heat-shrink tube	●
	T	23	23.6	23.5	22.6	FGG.5K.823.TNS	FFA.5K.132.LC	heat-shrink tube	●

Note:
[1] The bend relief is to be ordered separately (see pages 91 and 92).
[2] Add a short piece of heat-shrink tubing under the bend relief.
[3] The heat-shrink tube is supplied.

● First choice alternative ○ Special order alternative

All dimensions are in millimeters.

Variant

The «variant» position of the reference is used to specify the colour of the shell, the anodized colour according to the table below or the cable group.

Colour of connectors shell made of plastic material

Ref.	Colour
B[1]	white
G[1]	grey

Note: [1] PSU connector shells are only available in white or grey colours.

Anodized colour

Part number for connector with standard collet nut

Ref.	Anodized colour
A	blue
J	yellow
N	black

Ref.	Anodized colour
R	red
T	natural
V	green

Part number for connector with collet nut for bend relief

Ref.	Anodized colour
L	black
X	natural

Note: Other anodizing colours are available for connectors with collet nut for bend relief. Please consult the factory.

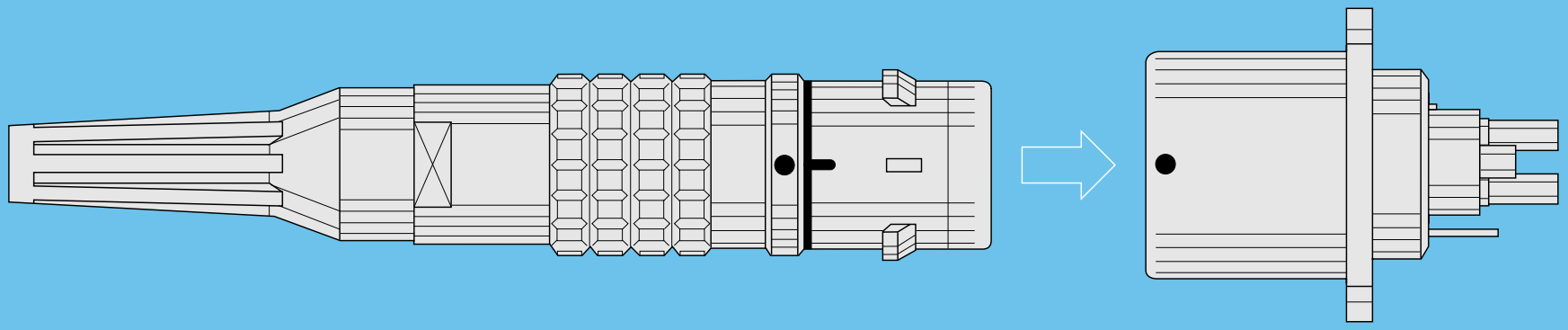

3K.93C SERIES

3K.93C Series

The LEMO 3K.93C connectors with keys (W) were developed to meet the critical requirements of the new generation of digital HDTV cameras.
The main features of this series are as follows:
– Security of the LEMO Push-Pull self-latching system
– Fitted with the standard LEMO **F2** fibre optic contacts.
– Conforms to the Japanese ARIB technical report BTA S-1005B, to the ANSI/SMPTE 304 M-1998 and 311M-1998 standards and to the European EBU Technical Recommendation R100-1999.
– Qualified for use in UL approved equipment such as those specified in UL 1419 «Professional Video and Audio Equipment».
– Cabled connectors have obtained the EC Attestation of conformity No: N8 00 03 39058 001 from the German TÜV Product Service.
The 3K.93C series consists of eleven models which will accept cables specific to this application. It includes the HEAVY DUTY line with stainless steel shells that is guaranteed to at least 20,000 mating cycles and offer more resistance to heavy wear conditions.

Interconnections

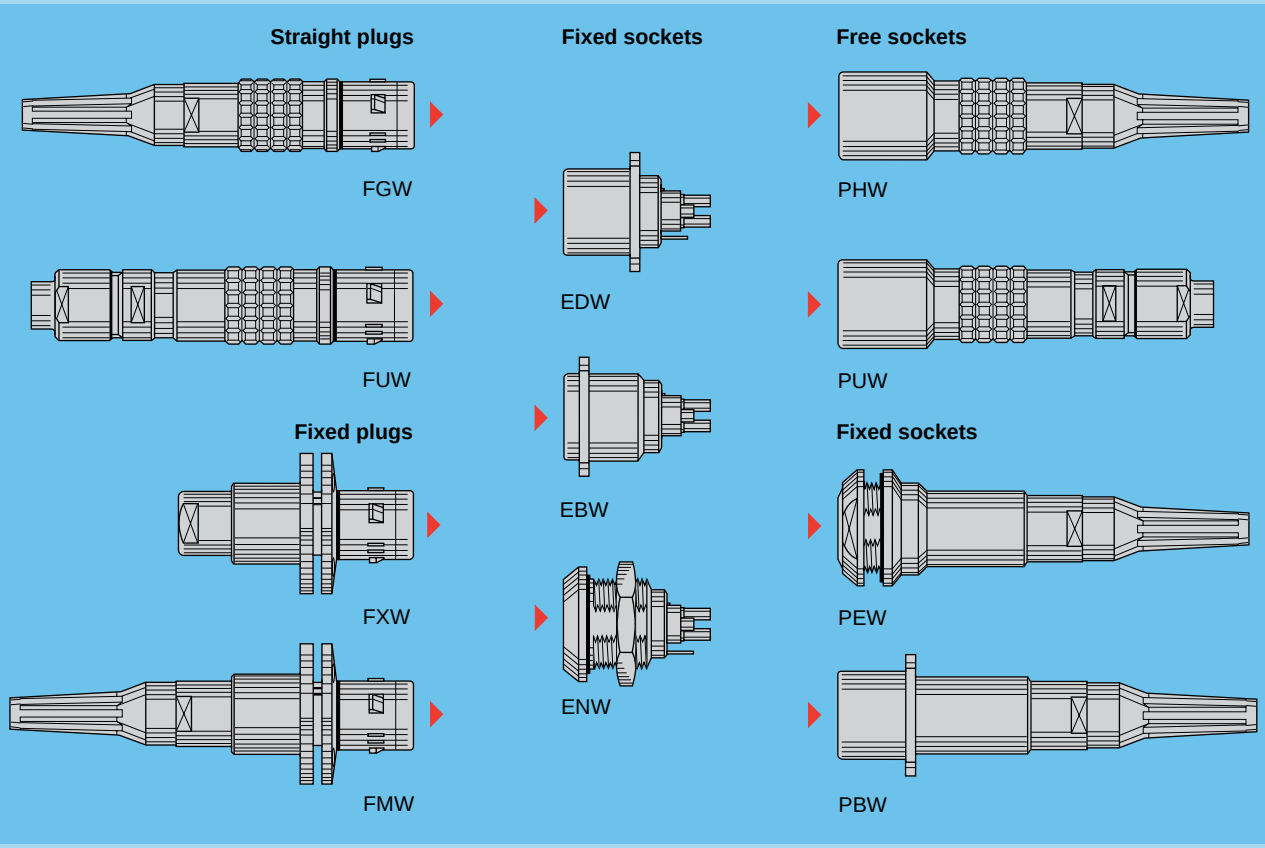

Model Description

FGW Straight plug, keys (W), cable adapter, with bend relief
FMW Fixed plug with round flange (4 holes fixing), keys (W), cable adapter, with bend relief
FUW Straight plug, keys (W), cable collet adapter and long shell for fitting a bend relief with cap (with enhanced screen efficiency)
FXW Fixed plug with round flange (4 holes fixing), keys (W)
EBW Fixed socket with front square flange (4 holes fixing), keys (W)
EDW Fixed socket with rear square flange (4 holes fixing), keys (W), and earthing tag
ENW Fixed socket, nut fixing, keys (W), and earthing tag
PBW Fixed socket with rear square flange (4 holes fixing), keys (W), cable adapter, with bend relief
PEW Fixed socket, nut fixing, keys (W), cable adapter, with bend relief (back panel mounting)
PHW Free socket, keys (W), cable adapter, with bend relief
PUW Free socket, keys (W), cable collet adapter and long shell for fitting a bend relief with cap (with enhanced screen efficiency)

Part Section Showing Internal Components

Fixed socket

1. shell
2. grounding crown with tag
3. retaining ring
4. insulator
5. female HV contact
6. FO contact
7. O-ring
8. male LV contact

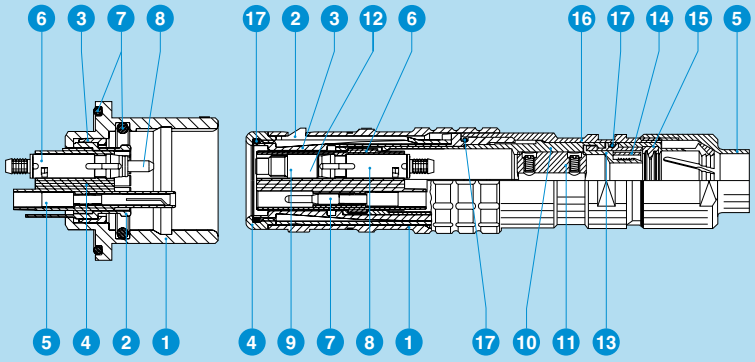

Straight plug

1. outer shell
2. latch sleeve
3. inner shell
4. front ring
5. collet nut
6. insulator
7. male HV cont.
8. FO contact
9. FO alignment device
10. split-insert carrier
11. anchor with screws
12. female LV contact
13. earthing body
14. crimp ring
15. collet with gaskets
16. extended shell
17. o-ring

Technical Characteristics

Materials and Treatments

Component	Material (Standard)	Surface treatment (µm)							
		chrome			nickel		gold		
		Cu	Ni	Cr	Cu	Ni	Cu	Ni	Au
Outer shell, collet nut and oversized collet	Brass (UNS C 38500)	0.5	3	0.3	–	–	–	–	–
	Stainless steel (AISI 303)	without treatment							
Grounding crown	Special brass	–	–	–	0.5	3	–	–	–
	Stainless steel (AISI 416)	without treatment							
Latch sleeve	Special brass	0.5	3	0.3	–	–	–	–	–
	Stainless steel (AISI 416)	without treatment							
Locking washer	Bronze (UNS C 52100)	–	–	–	0.5	3	–	–	–
Hexagonal or round nut	Brass (UNS C 38500)	–	–	–	0.5	3	–	–	–
Male crimp contact	Brass (UNS C 34500)	–	–	–	–	–	0.5	3	1.0
Female crimp contact	Bronze (UNS C 54400)	–	–	–	–	–	0.5	3	1.5
Clips	Cu-Be (FS QQ-C-530)	without treatment							
Insulator	PEEK	–							
Crimping tube	Copper (UNS C 18700)	–	–	–	0.5	3	–	–	–
Other metallic components	Brass (UNS C 38500)	–	–	–	0.5	3	–	–	–
	Stainless steel (AISI 303)	without treatment							
O-ring and gaskets	Silicone MQ/MVQ, FPM/FKM (Viton®) or Nitril NBR	–							

Notes: Standards for surface treatment are as follows:
– Chrome-plated: SAE AMS 2460;
– Nickel-plated: SAE AMS QQ N 290 or MIL DTL 32119;
– Gold-plated: ISO 27874

Mechanical and Environmental

Characteristic	Value	Standard
Mating durability (Brass+Brass)	10,000 cycles	IEC 61300-02-02
Mating durability (Brass+Stainless steel)	8,000 cycles	IEC 61300-02-02
Mating durability (Stainless steel+St. steel)	20,000 cycles	IEC 61300-02-02
Damp heat steady state	Up to 95% at 60°C	IEC 61300-02-19
High temperature	+80°C	IEC 61300-02-18
Low temperature	-40°C	IEC 61300-02-17
Temperature cycling	-55°C + 90°C	
Cable retention	1000 N	IEC 61300-02-04
Impact (Method A)	2 m onto concrete floor	IEC 61300-02-12
Shock (3 cycles in 2 directions)	100 g, 10-50 ms; 20 g 6-9 ms	IEC 61300-02-09
Vibration (7 cycles)	Diagram 2 page 111	IEC 61300-02-01
Water resistance (Depth of 1.8 for 48 h)	IP 68 [1]	IEC 60529
Salt spray corrosion test [2]	> 144h	IEC 60512-6 test 11f

Optical

Characteristic	Value	Standard	Method
Average insertion loss fibre 9/125 µm	0.10 dB	IEC 61300-03-04	Insertion Method B
Return loss fibre 9/125 µm (UPC)	≥45 dB	IEC 61300-03-06	Branching Device Met.
Return loss fibre 9/125 µm (Hand polish)	~30 dB	IEC 61300-03-06	Branching Device Met.

Electrical

Characteristic		Value	Standard	Section
Insulation resistance		> 10^{12} Ω	IEC 60512-2	test 3a
Shell electrical continuity		< 1.6 mΩ	IEC 60512-2	test 2f
Contact resistance (signal)		< 4.8 mΩ	IEC 60512-2	test 2a
Contact resistance (power)		< 3.6 mΩ	IEC 60512-2	test 2a
Radiated emission[1]	freq. 30-220 MHz	< 30 dBµV/m	EN 55022	class B
	freq. 220-1000 MHz	< 37 dBµV/m	EN 55022	class B

Note: [1] for FUW and PUW model only.
Detailed characteristics are presented on pages 109 to 111.

Note: [1] except FX● and FM● models. [2] for chrome plated product (« C» material code).

Alignment Key and Polarized Keying Systems

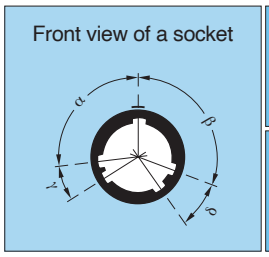

Model	No of keys	Angles	
●●W	5	α	95°
		β	115°
		γ	20°
		δ	30°

Recommended cables

Cable group	Type	Utilisation	Sheath outer ø
1	2SM-8.6-37.5	outdoor	8.6 ± 0.3
2	2SM-9.2-37.5	outdoor	9.2 ± 0.3
3	2SM-12-15	long distances	12.0 ± 0.4
4[1)]	2SM-16-37.5	indoor	16.0 ± 0.5

Note: [1)] The outer sheath shall be removed for assembly.

Part Number Example

A different part number structure is applicable for each of the following product types:
– Plugs and sockets for assembly onto cables
– Fixed plugs and sockets.

Straight plug with cable adapter

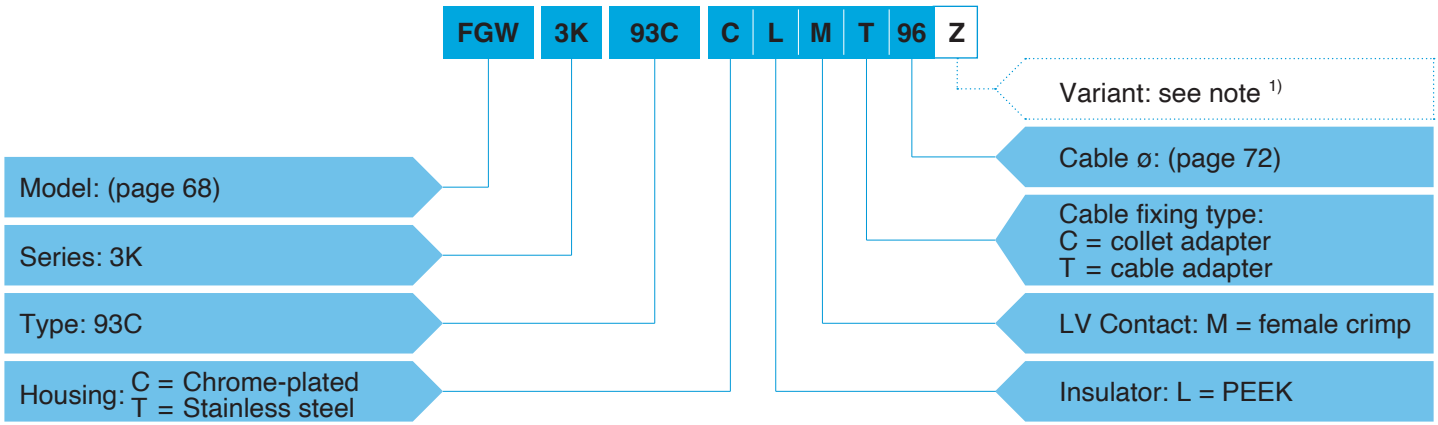

FGW.3K.93C.CLMT96Z = Straight plug with keys (W), 3K series, hybrid type to accept 2 F2 type fibre optic contacts, 2 power and 2 signal electrical contacts, chrome-plated brass housing, PEEK insulator, female crimp signal contacts, cable fixing type T for 9.2 mm diameter cable, and nut for fitting a bend relief.

Fixed socket

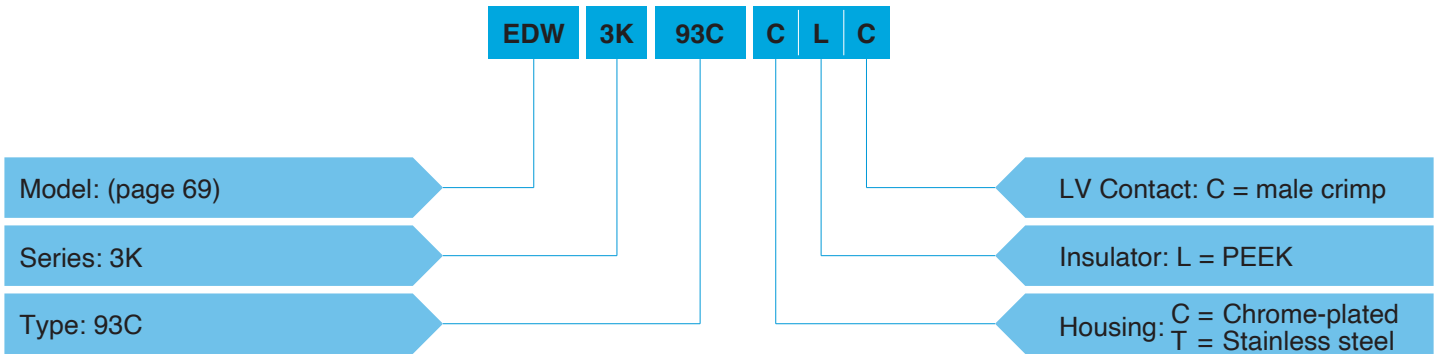

EDW.3K.93C.CLC = Fixed socket with rear square flange, keys (W), 3K series, hybrid type to accept 2 F2 type fibre optic contacts, 2 power and 2 signal electrical contacts, chrome-plated brass housing, PEEK insulator, male crimp signal contacts.

The fibre optic contacts must be ordered separately (see page 79).

Note: [1)] The «Variant» position in the reference is used to indicate the presence of a collet nut for fitting the bend relief.
For models with the «T» type of cable adapter the «Z» should always be indicated and a bend relief can be ordered separately as indicated in the «Accessories» section. An order for a connector with bend relief should thus include two part numbers.

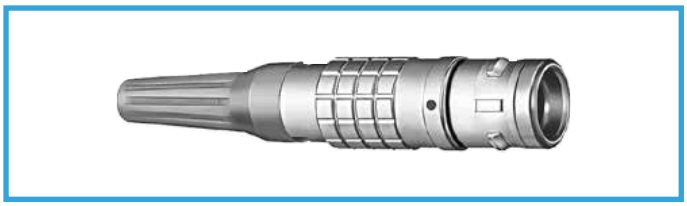

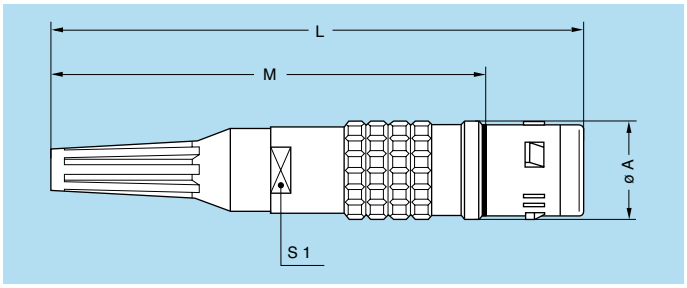

FGW.3K Straight plug, keys (W), cable adapter, with bend relief

Part Number	Cable group	Dimension (mm)			
		A	L	M	S1
FGW.3K.93C.CLMT90Z	1	19	101	81	15
FGW.3K.93C.CLMT96Z	2, 4	19	101	81	15
FGW.3K.93C.CLMT12Z	3	19	135	115	20

Note: The bend relief must be ordered separately (see page 91).
The overall length dimension is with bend relief (see pages 91 and 92).

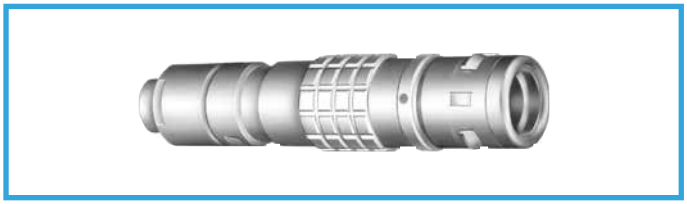

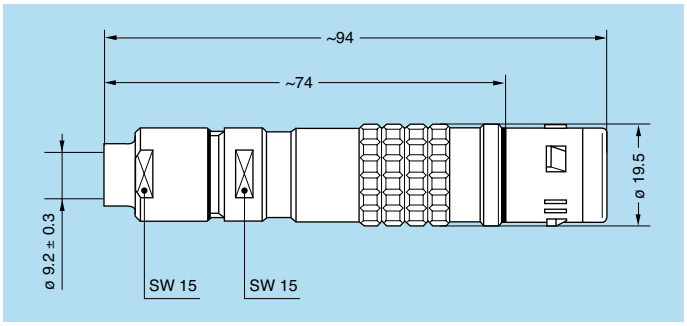

FUW.3K Straight plug, keys (W), cable collet adapter and long shell for fitting a bend relief with cap (with enhanced screen efficiency)

Part Number	Cable group	Note
FUW.3K.93C.CLMC96	2, 4	–
FUW.3K.93C.TLMC96	2, 4	HEAVY DUTY LINE

Note: The bend relief with cap must be ordered separately (see page 91).

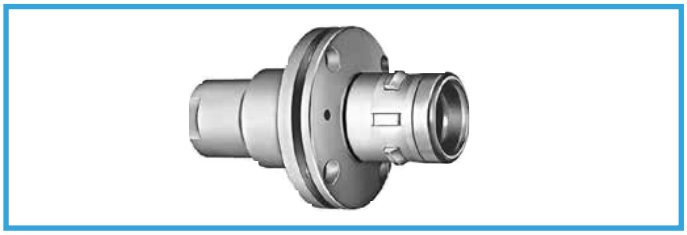

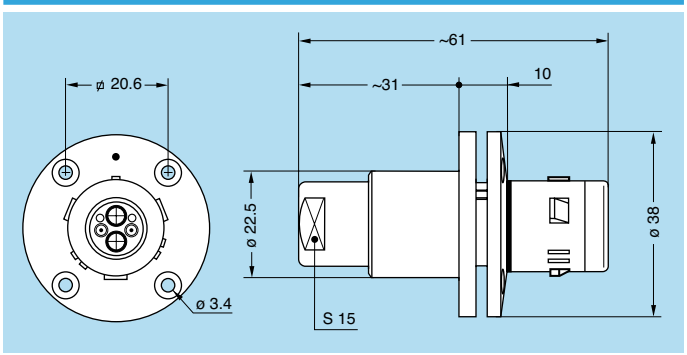

FXW.3K Fixed plug with round flange (4 holes fixing), keys (W)

Part Number	Note
FXW.3K.93C.CLM	–
FXW.3K.93C.TLM	HEAVY DUTY LINE

Panel cut-out (page 76)

Note: Only available for IP 50 in mated condition.

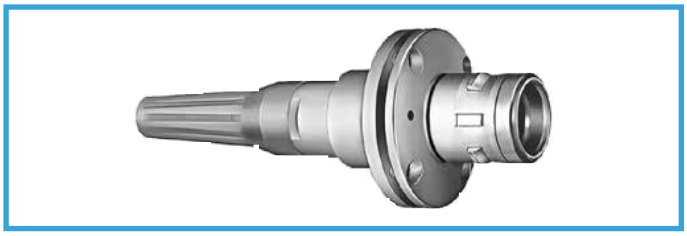

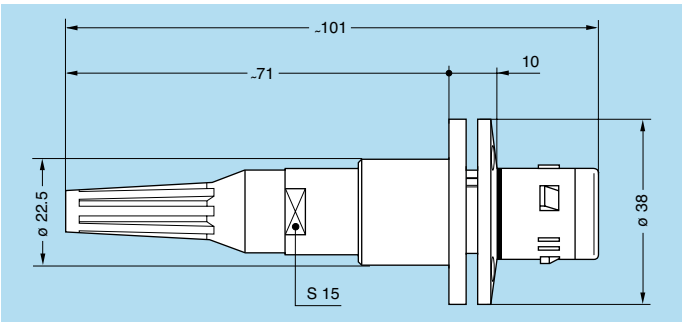

FMW.3K Fixed plug with round flange (4 holes fixing), keys (W), cable adapter, with bend relief

Part Number	Cable group	Note
FMW.3K.93C.CLMT90Z	1	–
FMW.3K.93C.CLMT96Z	2, 4	–
FMW.3K.93C.TLMT96Z	2, 4	HEAVY DUTY LINE

Panel cut-out (page 76)

Note: Only available for IP 50 in mated condition.
See FXW drawing for front view.
The bend relief must be ordered separately (see page 91).
The overall length dimension is with bend relief (see pages 91 and 92).

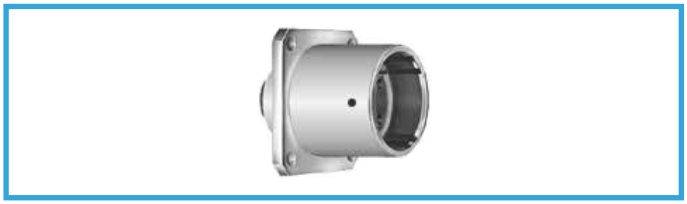

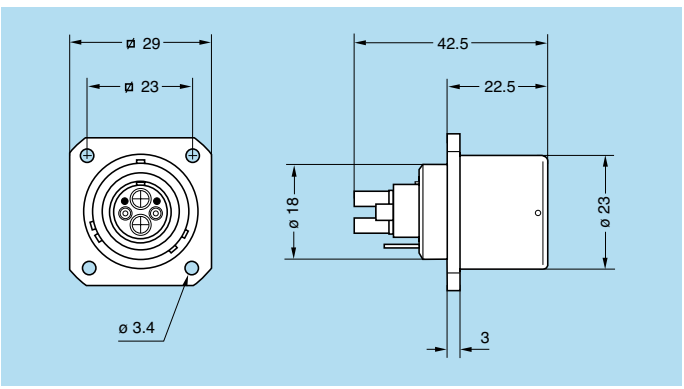

EDW.3K Fixed socket with rear square flange (4 holes fixing), keys (W), and earthing tag

Part Number	Note
EDW.3K.93C.CLC	–
EDW.3K.93C.TLC	HEAVY DUTY LINE

Panel cut-out (page 76)

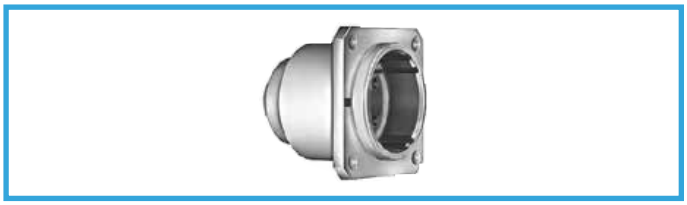

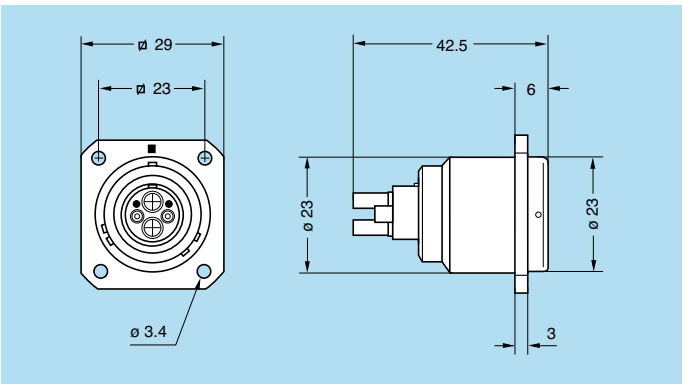

EBW.3K Fixed socket with front square flange (4 holes fixing), keys (W)

Part Number
EBW.3K.93C.CLC

Panel cut-out (page 76)



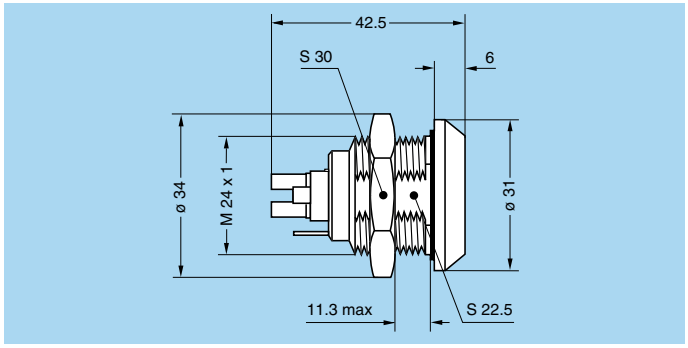

ENW.3K Fixed socket, nut fixing, keys (W), and earthing tag

Part Number
ENW.3K.93C.CLC

Panel cut-out (page 76)

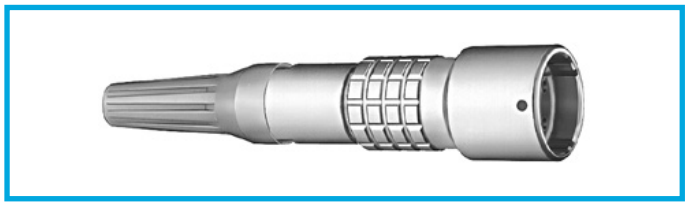

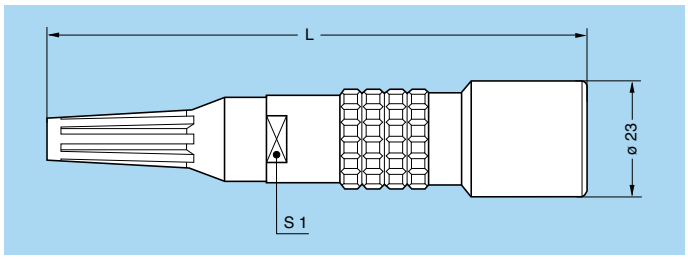

PHW.3K Free socket, keys (W), cable adapter, with bend relief

Part Number	Cable group	Dimension (mm)	
		L	S1
PHW.3K.93C.CLCT90Z	1	105	15
PHW.3K.93C.CLCT96Z	2, 4	105	15
PHW.3K.93C.CLCT12Z	3	139	20

Note: The bend relief must be ordered separately (see page 91).
The overall length dimension is with bend relief (see pages 91 and 92).

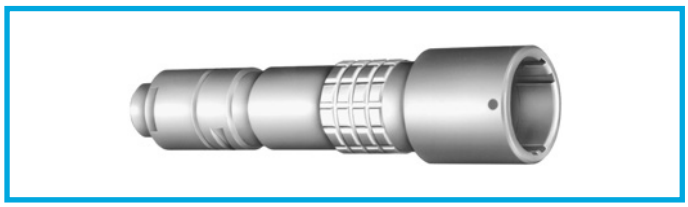

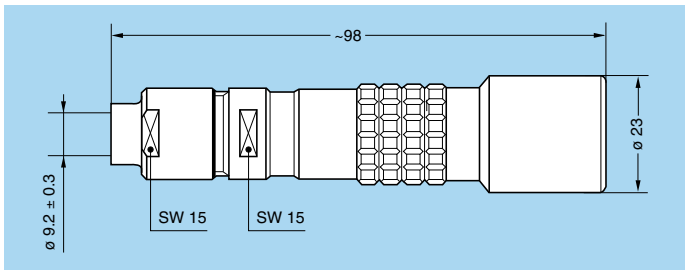

PUW.3K Free socket, keys (W), cable collet adapter and long shell for fitting a bend relief with cap (with enhanced screen efficiency)

Part Number	Cable group	Note
PUW.3K.93C.CLCC96	2, 4	–
PUW.3K.93C.TLCC96	2, 4	HEAVY DUTY LINE

Note: The bend relief with cap must be ordered separately (see page 91).

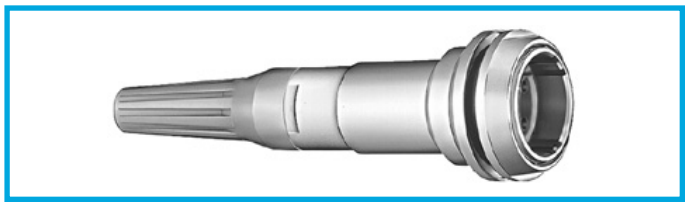

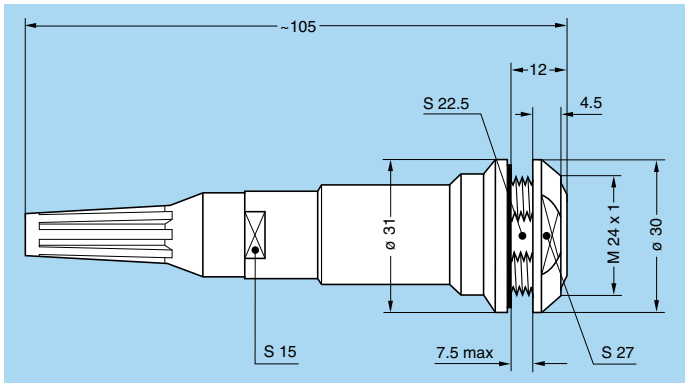

PEW.3K Fixed socket, nut fixing, keys (W), cable adapter, with bend relief
(back panel mounting)

Part Number	Cable group	Note
PEW.3K.93C.CLCT90Z	1	–
PEW.3K.93C.CLCT96Z	2, 4	–
PEW.3K.93C.TLCT96Z	2, 4	HEAVY DUTY LINE

Panel cut-out (page 76)

Note: The bend relief must be ordered separately (see page 91).
The overall length dimension is with bend relief (see pages 91 and 92).

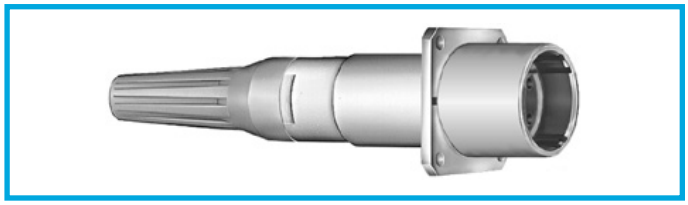

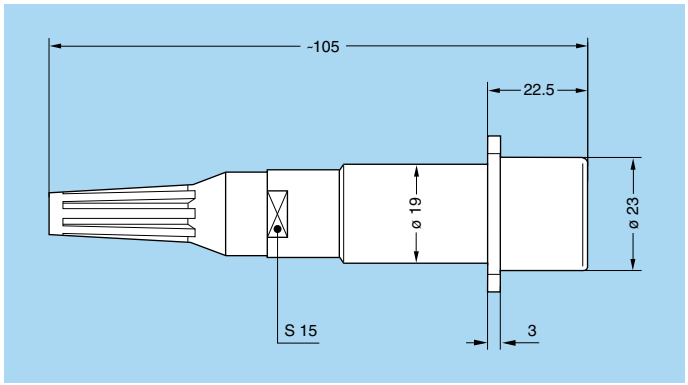

PBW.3K Fixed socket with rear square flange (4 holes fixing), keys (W), cable adapter, with bend relief

Part Number	Cable group
PBW.3K.93C.CLCT90Z	1
PBW.3K.93C.CLCT96Z	2, 4

Panel cut-out (page 76)

Note: See EDW drawing for front view.
The bend relief must be ordered separately (see page 91).
The overall length dimension is with bend relief (see pages 91 and 92).

Types

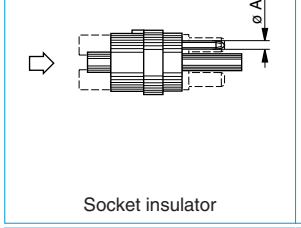

Socket insulator

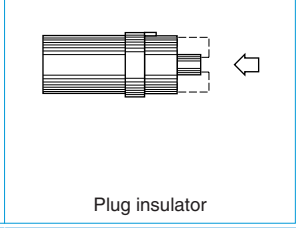

Plug insulator

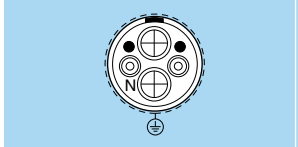

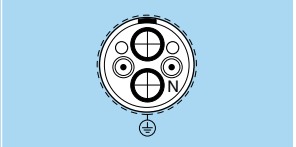

Reference	Fibre optic contact				Electrical crimp contacts								
	Fibre optic F2 No	Contact type for plug	Fibre core/cladding (µm)	Ferrule bore inside ø (µm)	No of contacts	Contact function	Contact type for plug	Contact ø A (mm)	AWG range	Creepage distance and air clearance (mm)	Working voltage (V rms)	Test voltage (V rms)	Rated current (A)
93C	2	fem.	9/125	125	2	signal	L.V. fem.	0.9	20-24	–	≤42	1000	3
					2	power	H.V. male	1.3	14-18	>6.5	≤600	2250	10

Fibre Optic Contact

FFS.F2 Male F2 Fibre Optic Contact

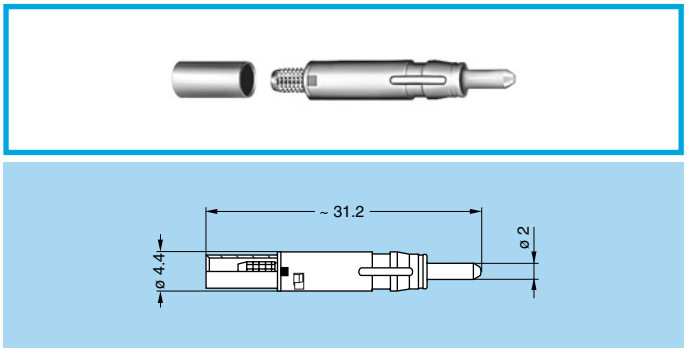

Part number	Models
FFS.F2.BA2.LCT10	PHW, PEW, PBW, PUW
FFS.F2.BA2.LCE30	EDW, ENW, EBW

PSS.F2 Female F2 Fibre Optic Contact

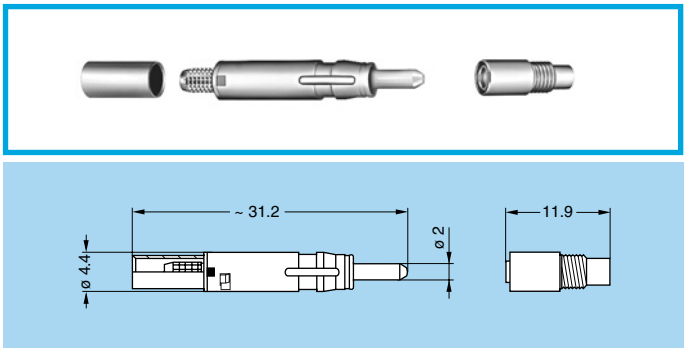

Part number	Models
PSS.F2.BA2.LCT10	FGW, FMW, FUW
PSS.F2.BA2.LCE30	FXW

Note: The above contacts are fitted with a 125 micron bore ferrules. If as an alternative 126 micron bore ferrule is required the «BA2» in the part number should be replaced with the reference «BB2».

Accessories

Cable adapter type «T» for FGW, FMW, PHW, PEW and PBW

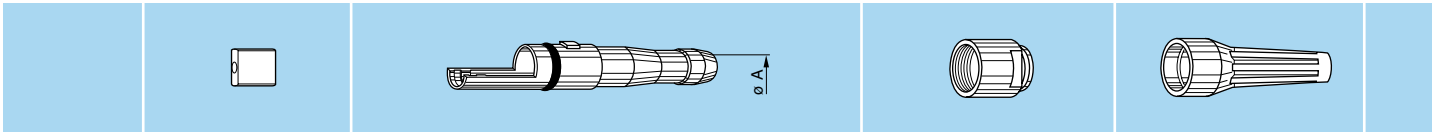

Reference		Part number of the anchor with screws	Adapter ø A	Cable ø		Part number of the adapter with gasket	Part number of the collet nut	Bend relief to be used [1]	Cable group
Type	ø			max.	min.				
T	90	FGW.3K.145.ZZA	9.1	9.0	8.1	FGW.3K.890.TNN	FFM.3E.130.●●	GMA.3B.080.DN	1
T	96	FGW.3K.146.ZZA	9.6	9.5	8.6	FGW.3K.896.TNN	FFM.3K.131.●●	GMA.3B.090.DN	2, 4
T	12	FGW.3K.147.ZZA	12.6	12.5	11.6	FGW.3K.812.TNV	FFM.3K.132.●●	GMA.4B.011.DN	3

Note: [1] The last letter «N» on the part number indicates black colour of the bend relief. For ordering a bend relief with another colour see table on page 92 and replace the letter «N» by the letter of the colour required.

Collet adapter type «C» for FUW and PUW



Reference		Part number of the anchor with screws	Part number of earthing body with o-ring	Part number of crimp ring	Collet ø A	Cable ø		Part number of collet with gaskets	Part number of extended shell	Part number of the collet nut	Cable group
Type	ø					max.	min.				
C	96	FGW.3K.146.ZZA	FFS.3K.130.LNV	FFS.3K.160.DN	9.6	9.5	8.6	FUW.3K.796.ZZS	FUW.3K.137.●●	FUW.3K.130.●●	2, 4

Note:
●● = LC for chrome-plated brass version
●● = AZ for stainless steel version

All dimensions are in millimeters.

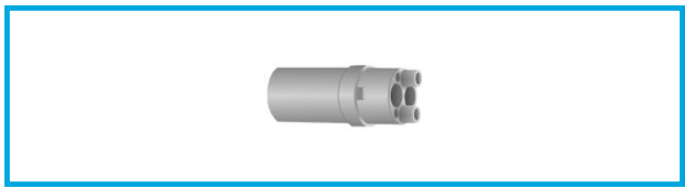

Insulator for plug

Part number	Contact type	
	Signal	Power
EGW.3K.444.EL	Female	Male

Note: Insulator should be ordered as replacement item.

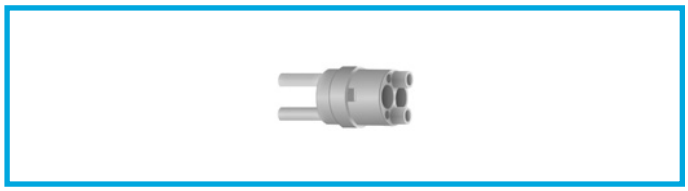

Insulator for socket

Part number	Contact type	
	Signal	Power
FGW.3K.344.EL	Male	Female

Note: Insulator should be ordered as replacement item.

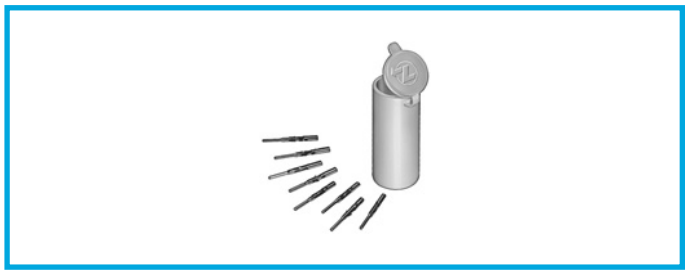

Crimp contacts

ø Contact LV	Contact function	Contact part number	
		Male	Female
0.9	Signal	FGG.3B.560.ZZC	EGG.3B.660.ZZM
1.3	Power [1]	FGW.3K.565.ZZC	EGW.3K.666.ZZM

Note: [1] Power contacts are special with an oversized crimp barrel.
Crimp contacts should be ordered as replacement items.

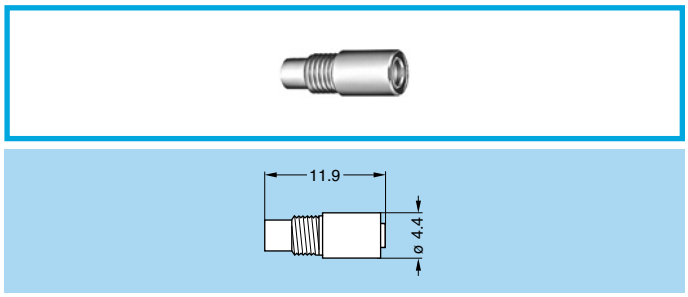

PSS Alignment device for F2 fibre optic contacts

Part number
PSS.F2.290.NZZ

Note: Alignment device should be ordered as replacement item.

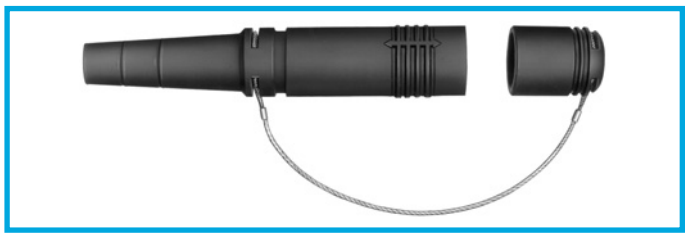

GMF.3K Bend relief with cap for FUW plug

Part number
GMF.3K.085.EANZ

- Material: black ALCRYN®

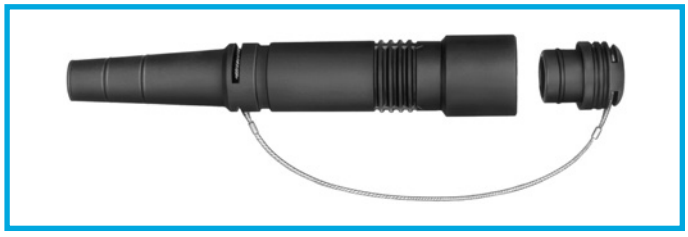

GMP.3K Bend relief with cap for PUW free socket

Part number
GMP.3K.085.EANZ

- Material: black ALCRYN®

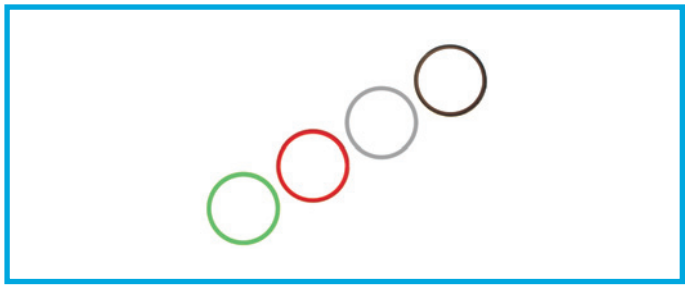

GMF.3K Coloured ring for bend relief with cap

Part number	Colour
GMF.3K.265.RG	grey
GMF.3K.265.RN	black
GMF.3K.265.RR	red
GMF.3K.265.RV	green

- Material: Silicone



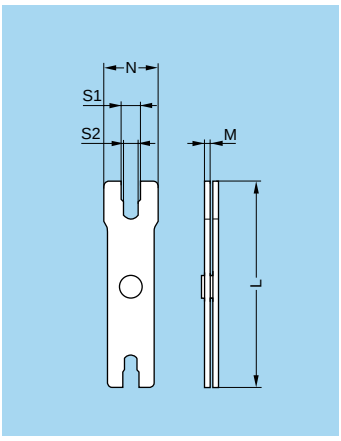

DCP Spanner for tightening collet nut

Part number	Series	Dimensions (mm)				
		L	M	N	S1	S2
DCP.91.023.TN	2K	115	3.0	30	13.1	12.1
	3K	115	3.0	35	15.1	14.1

- Material: Blackened steel

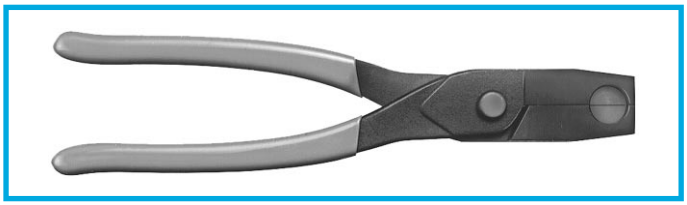

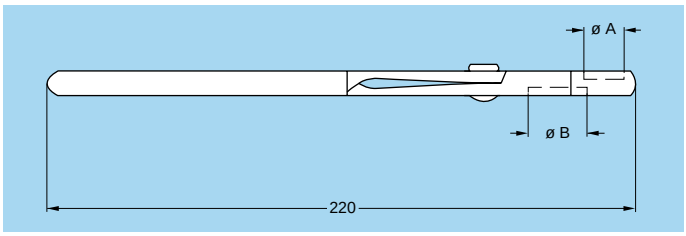

DPF Pliers for assembling plugs or free sockets

Part number	Dimensions (mm)	
	A	B
DPF.91.033.TA	18	23
Model	plugs	free sockets

Example for use

The plug or socket end must be held in the pliers while the nut is tightened with the spanner.

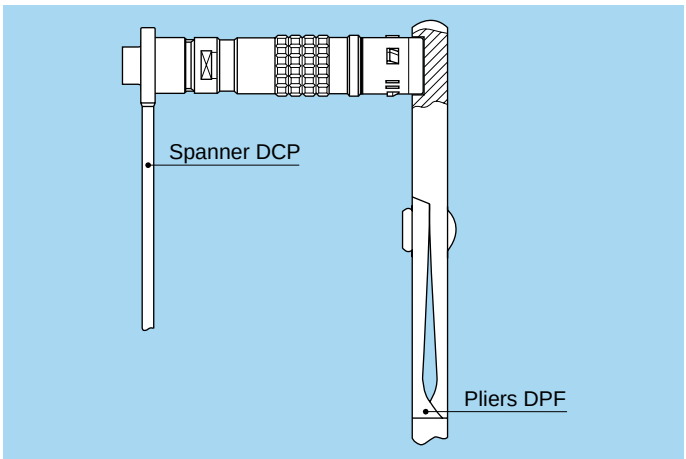

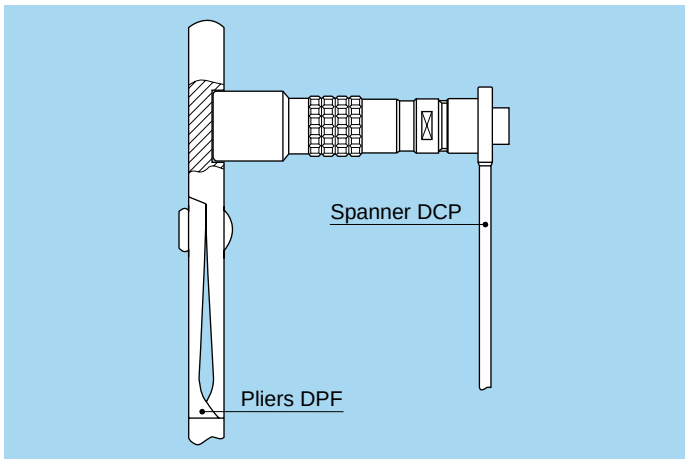



DPD Crimping tool for screen crimping on FUW and PUW

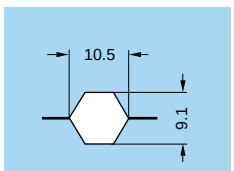

Part number
DPD.99.010.5K

Fibre Optic Tooling

The full range of tools for terminating fibre optic contacts is shown on pages 103 to 106.

Crimping Tools for Electrical Contacts

Fig. 1

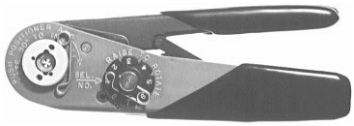

Fig. 2

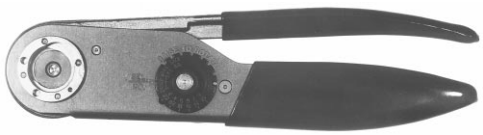

Manual crimping tools

Supplier	Part number	
	signal contacts ø 0.9	power contacts ø 1.3
LEMO	DPC.91.701.V[1)]	DPC.91.101.A[2)]
DANIELS	MH860[1)]	AF8[2)]
BALMAR	23-000	55-000
BUCHANAN	616336[1)]	615708[2)]

[1)] According to specification MIL-C-22520/7-01.
[2)] According to specification MIL-C-22520/1-01.



male



female

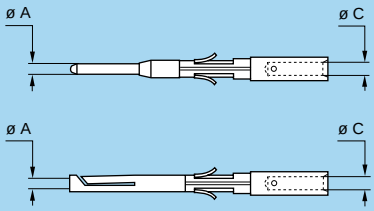

DCE Positioners for signal contacts ø 0.9 mm

Contacts dimensions		Conductor AWG	Selector Pos.	Positioners part number	
ø A	ø C			For male contact	For female contact
0.9	1.1	20-22-24	6-5-5	DCE.91.093.BVC	DCE.91.093.BVM

Note: These positioners are suitable for use with both manual and pneumatic crimping tools according to the MIL-C-22520/7-01 standard.



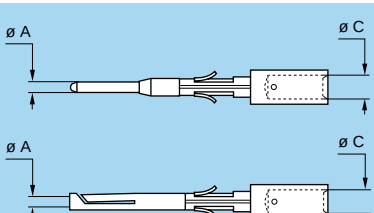

DCE Turret for power contacts ø 1.3 mm

Power contacts are special with an oversized crimp barrel.

Contacts dimensions		Conductor AWG	Selector Pos.	Positioners part number
ø A	ø C			For male and female contact
1.3	1.9	14-16-18	7-6-5	DCE.91.133.BVCW

Note: These turrets can be used with manual crimping tool according to MIL-C-22520/1-01 standard.

Termination Instruction



Part Number	Models
DOC.FO.W3K.93CO	All

Panel Cut-Outs

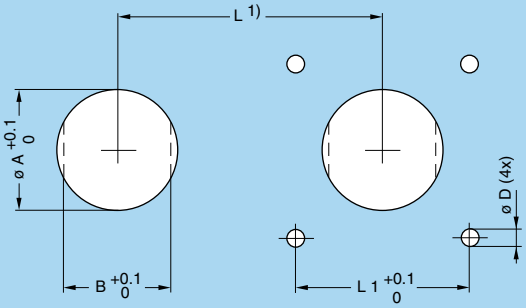

Models	Dimension (mm)				
	A	B	D	L	L1
FMW, FXW	23.2	–	3.2 or M3	39	20.6
EBW	23.2	–	3.2 or M3	30	23.0
EDW	23.2	–	3.2 or M3	30	23.0
ENW, PEW	24.2	22.6	–	32	–
PBW	23.2	–	3.2 or M3	30	23.0

Note: 1) Minimum distance between two neighbouring components.

Mounting torque

Series	Torque (Nm)	
	Nut	Screws
3K	12	1 to 2 1)

Note: 1) Depends on screw material selected.
The values shown in the table above are the maximum torque for each connector type.

F1 Fibre Optic Contact

Introduction

The F1 type contact is designed for fitting into multi fibre or hybrid fibre optical/electrical connectors from the 2B to 5B, 2K to 5K series.
Its main features are as follows:
– Simple and proven construction with a metallic or ceramic ferrule
– Polishing with specific tooling ensuring a minimum gap between fibres which are not in physical contact
– After mounting on the cable, the contact is installed in the main connector insulator, and retained with a metallic clip.
This contact is suitable for use with multi-mode fibres in Si/Si or plastic, ranging in sizes from 100/140 to 1500 µm.

Part Section Showing Internal Components

Female contact

1. ferrule with holder
2. clips
3. crimp ferrule
4. alignment tube

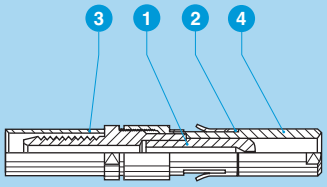

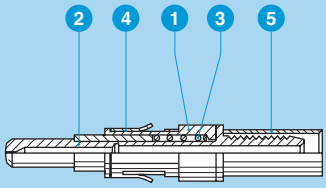

Male contact

1. body with holder
2. ferrule with holder
3. spring
4. clips
5. crimp ferrule

Technical Characteristics

Material and treatment of the Fibre Optic Contact

Component	Material	Surface treatment (µm)	
		Cu	Ni
Body and holder	Alloy CuNiZn	without treatment	
Ferrule	Alloy CuNiZn or ceramic	without treatment	
Spring	Stainless steel	without treatment	
Clip	Cu-Be	without treatment	
Crimp ferrule	Cu 99	0.5	3
Alignment tube	Alloy CuNiZn	without treatment	

Mechanical and Environmental

Characteristic	Value	Standard
Mating durability	1000 cycles	IEC 61300-02-02
Damp heat steady state	up to 95 % at 60°C	IEC 61300-02-19
High temperature	+80°C	IEC 61300-02-18
Low temperature	-40°C	IEC 61300-02-17
Cable retention	100 N	IEC 61300-02-04

Optical

Characteristic	Value	Standard	Method
Average insertion loss fibre 200/230 µm	1.13 dB	IEC 61300-03-04	Insertion Method B

Note: Detailed characteristics are presented on pages 109 to 111.

Part Number Example

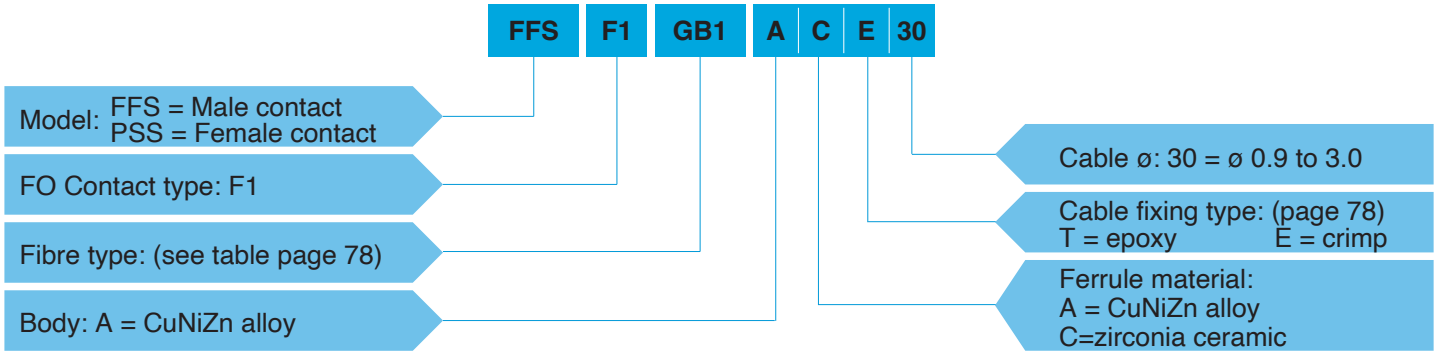

FFS.F1.GB1.ACE30 = Male F1 type fibre optic contact, ferrule bore diameter of 235 µm, ferrule made of zirconia ceramic, crimp type cable fixing for a cable diameter of 0.9 mm to 3.0 mm.

Model - FO Contact Type

FFS.F1 Male F1 Fibre Optic Contact



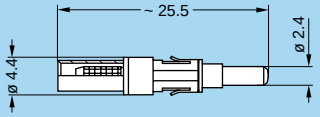

PSS.F1 Female F1 Fibre Optic Contact



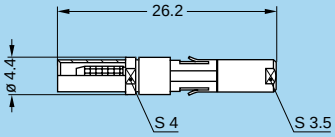

Fibre Type

The choice of the ferrule hole diameter is dependent upon the fibre cladding size. LEMO offers a range of ferrule hole diameters to suit the users' specific requirements.

Reference	Core/cladding ø (µm)	Ferrule hole ø (µm)	Ferrule material	Material ref.	Fibre type	Cable fixing type	Note
FB1	100/140	144	Ceramic	C	Silica	E	●
GA1	200/230	230	Ceramic	C	HCS	E	○
GB1	200/230	235	Ceramic	C	HCS	E	●
HA1	300/330	330	Ceramic	C	HCS	E	○
HB1	300/330	335	Ceramic	C	HCS	E	●
JA1	400/430	430	Metal	A	HCS	E	○
JB1	400/430	435	Metal	A	HCS	E	●
KA1	600/630	630	Metal	A	HCS	E	○
KB1	600/630	640	Metal	A	HCS	E	●
LA1	800/830	830	Metal	A	HCS	E	○
LB1	800/830	845	Metal	A	HCS	E	●
MA1	1000/1035	1035	Metal	A	HCS	E	○
MB1	1000/1035	1050	Metal	A	HCS	E	●
NA1	500	500	Metal	A	Polymer	E	○
NB1	500	550	Metal	A	Polymer	E	●
PA1	750	750	Metal	A	Polymer	E	○
PB1	750	825	Metal	A	Polymer	E	●
RA1	1000	1000	Metal	A	Polymer	E	○
RB1	1000	1100	Metal	A	Polymer	E	●
RK1	1400	1430	Metal	A	Polymer	E	●
SA1	1500	1500	Metal	A	Polymer	T	○
SB1	1500	1650	Metal	A	Polymer	T	●
TA1	200/380	380	Metal	A	PCS	E	○
TB1	200/380	410	Metal	A	PCS	E	●
VA1	300/440	440	Metal	A	PCS	E	○
VB1	300/440	475	Metal	A	PCS	E	●
WA1	600/750	750	Metal	A	PCS	E	●
WB1	600/750	810	Metal	A	PCS	E	●

● First choice alternative
○ Special order alternative

F2 Fibre Optic Contact

Introduction

The F2 type contact is designed for fitting into single fibre 0K series, multi fibre connectors or hybrid fibre optical/electrical connectors from 2B to 5B, 2K to 5K series.
Its main features are as follows:
– Assembly uses pre-domed ceramic ferrules
– Simple and fast polishing ensuring the physical contact of the fibre end face
– After mounting on the cable, the contact is very easily installed in the main connector insulator, the particular shape of the contact body retains it in the insulator
– Unique cable assembly independent of the connector shell
– The alignment tube can be easily removed in order to clean the fibre end face.
This contact makes it possible to use single fibre cables with single-mode or multi-mode fibres of the following sizes; 9/125, 50/125, 62.5/125, 100/125 and 100/140 µm.

Part Section Showing Internal Components

Female contact

1. body with holder
2. ferrule with holder
3. spring
4. crimp ferrule
5. alignment tube with support

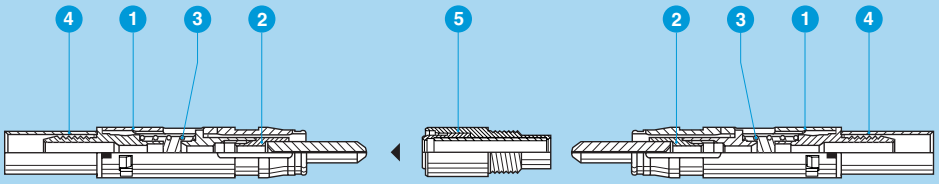

Male contact

1. body with holder
2. ferrule with holder
3. spring
4. crimp ferrule

Technical Characteristics

Material and Treatment

Component	Material	Surface treatment (µm)	
		Cu	Ni
Body	PEEK	without treatment	
Ferrule	Ceramic	without treatment	
Holder	Alloy CuNiZn	without treatment	
Crimp holder	Brass	0.5	3
Spring	Stainless steel	without treatment	
Crimp ferrule	Cu 99	0.5	3
Support	Alloy CuNiZn	without treatment	
Alignment tube	Ceramic	without treatment	

Mechanical and Environmental

Characteristic	Value	Standard
Mating durability	10,000 cycles	IEC 61300-02-02
Damp heat steady state	up to 95 % at 60°C	IEC 61300-02-19
High temperature	+80°C	IEC 61300-02-18
Low temperature	-40°C	IEC 61300-02-17
Cable retention	100 N	IEC 61300-02-04
Impact (Method A)	1 m onto concrete floor	IEC 61300-02-12
Shock (3 cycles in 2 directions)	100 g, 10-50 ms; 20 g 6-9 ms	IEC 61300-02-09
Vibration (7 cycles)	Diagram 2 page 111	IEC 61300-02-01

Optical

Characteristic	Value	Standard	Method
Average insertion loss fibre 9/125 µm	0.10 dB	IEC 61300-03-04	Insertion Method B
Average insertion loss fibre 50/125 µm	0.25 dB	IEC 61300-03-04	Insertion Method B
Return loss fibre 9/125 µm (UPC)	≥45 dB	IEC 61300-03-06	Branching Device Met.
Return loss fibre 9/125 µm (Hand polish)	~30 dB	IEC 61300-03-06	Branching Device Met.

Note: Detailed characteristics are presented on pages 109 to 111.

Part Number Example

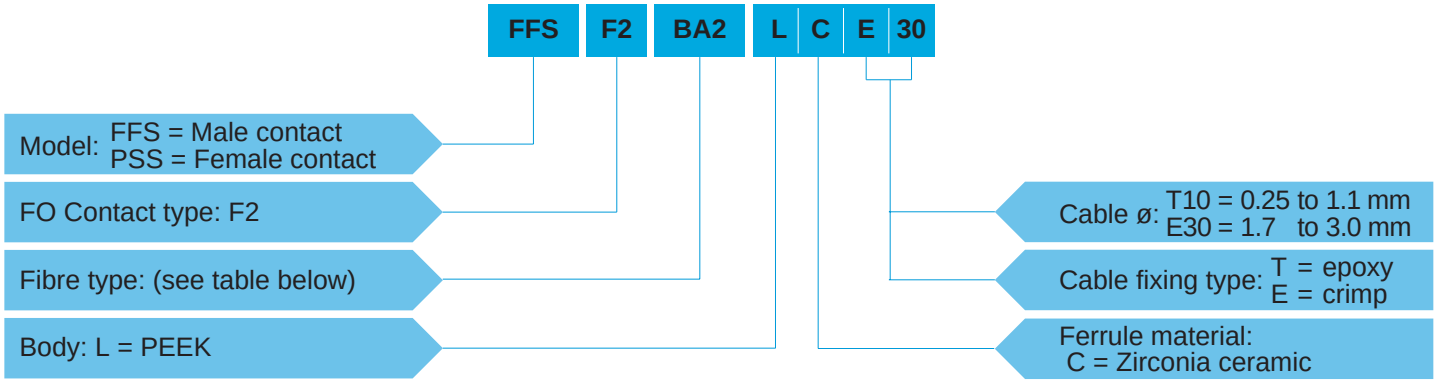

FFS.F2.BA2.LCE30 = Male F2 type fibre optic contact, ferrule bore diameter of 125 µm, PEEK body, Zirconia ceramic ferrule, crimp cable fixing, for tight jacket cable with a diameter between 1.7 to 3.0 mm.

Model - FO Contact Type

FFS.F2 Male F2 Fibre Optic Contact

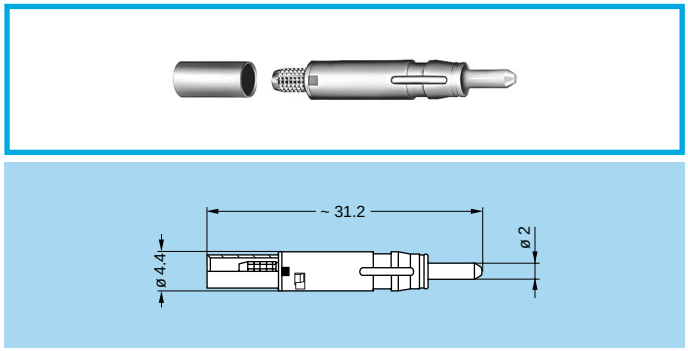

PSS.F2 Female F2 Fibre Optic Contact

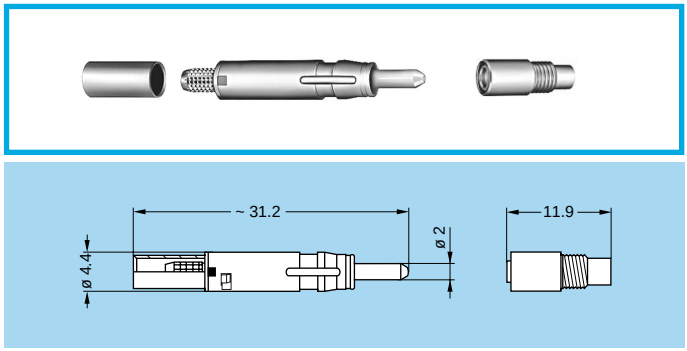

Fibre Type

The choice of the ferrule hole diameter is dependent upon the fibre cladding size. LEMO offers a range of ferrule hole diameters to suit the users' specific requirements.

Reference	ø Core/Cladding (µm)	Ferrule hole diameter (µm)	Note [1]
BA2	9/125 50/125 62.5/125 100/125	125	●
BB2		126	●
BC2		127	○
BD2		128	○
FA2	100/140	140	○
FB2		144	●

● First choice alternative ○ Special order alternative

Note: [1] The BA2 type (ferrule hole 125 µm) is recommended for single-mode fibres. The BB2 type (ferrule hole 126 µm) is commonly used with multi-mode fibres.

Cable Fixing Type

Reference		Cable Structure	Cable ø
Cable fixing	Reference ø		
T	10	Buffer coated fibre	0.25 to 1.1
E	30	Tight jacket cable	1.7 to 3.0

Accessory



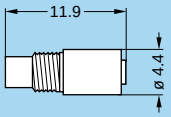

PSS **Alignment device for F2 fibre optic contact**

Part number
PSS.F2.290.NZZ

Note: Alignment device should be ordered as replacement item.

Insertion and Extraction of the Fibre Optic Contacts

Cable Termination

Detailed instructions for terminating single fibre cables with LEMO F2 fibre optic contacts are given in the reference manual DOC.FO.CF2.0000 supplied with the complete termination workstation (see page 103). After termination contacts shall be introduced in the main insulator as shown below. For purpose of cleaning they can also be removed.

Insertion and Extraction of the F1 Type Contact

Insertion

The fibre optic contact, male or female, terminated on the cable, must be inserted into the connector insulator from the back end until it comes to a stop (step 1 and 2). Check that the contact is correctly retained by gently pulling on it (step 3).

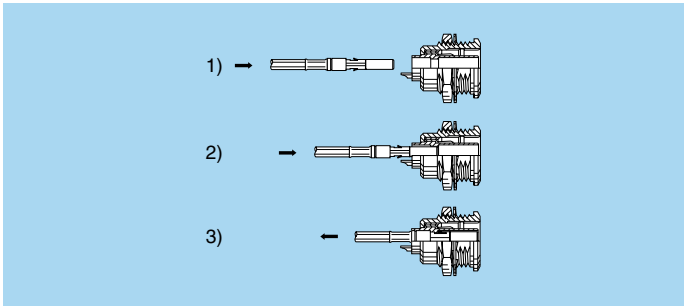

Extraction

Introduce the extractor, reference DCC.91.312.5LA (see page 105), in the insulator around the contact and push until it comes to a stop (step 1 and 2). Gently remove the fibre optic contact by pulling on the cable (step 3).

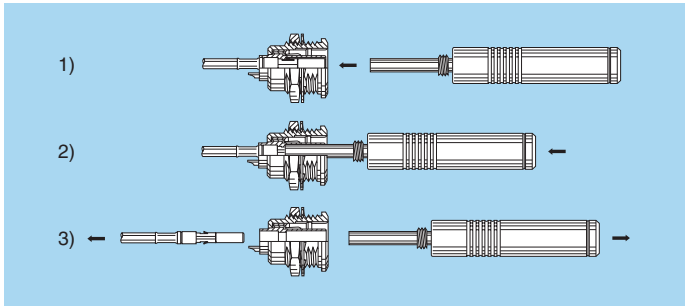

Insertion and Extraction of the F2 Type Contact

Insertion

The male fibre optic contact terminated on the cable must be inserted into the connector insulator from the back end until it comes to a stop. Make sure that the contact is correctly positioned into the inner antirotation key. Key is in line with the red dot on the rear of the contact (step 1).
Check that the contact is correctly retained by gently pulling on it (step 2).
For female contacts, the alignment device shall be clipped onto the fibre optic contacts which is already fitted into female insulator. This procedure is performed using the alignment device, reference DCS.F2.035.PN. The alignment device shall be first installed onto threaded end of the alignment device (step 3). Then clip the adapter (step 4), unscrew and remove the alignment device (step 5).

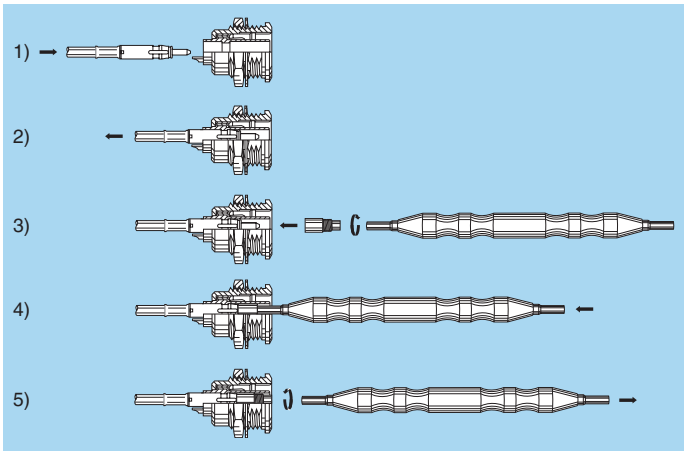

Extraction

Reverse the order of the operation previously described.
For female contact remove first the alignment device. Screw the threaded end of the alignment device reference, DCS.F2.035.PN (step 1), onto the alignment device and pull out strongly (step 2).
Then use the extractor reference, DCC.91.312.5LA, introduce it into the insulator and push until it comes to a stop to compress the contact body (step 3 and 4).
Gently remove the fibre optic contact by pulling on the cable (step 5).

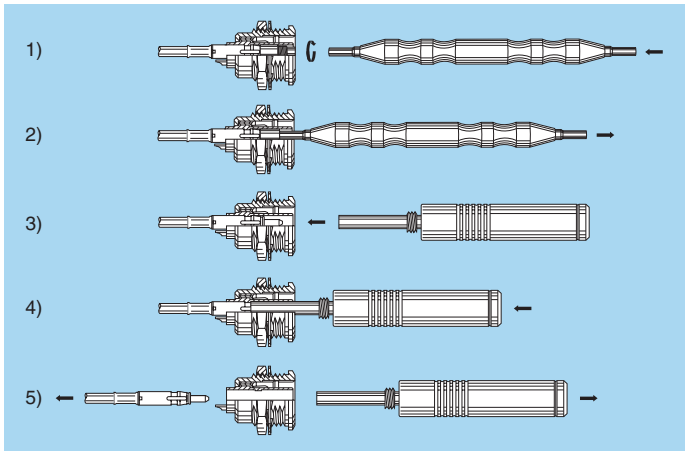

Note: The life time installation of the alignment device is minimum 300 cycles.

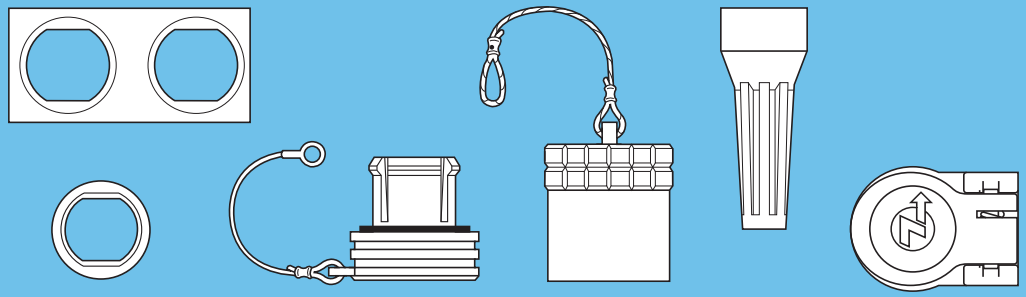

ACCESSORIES

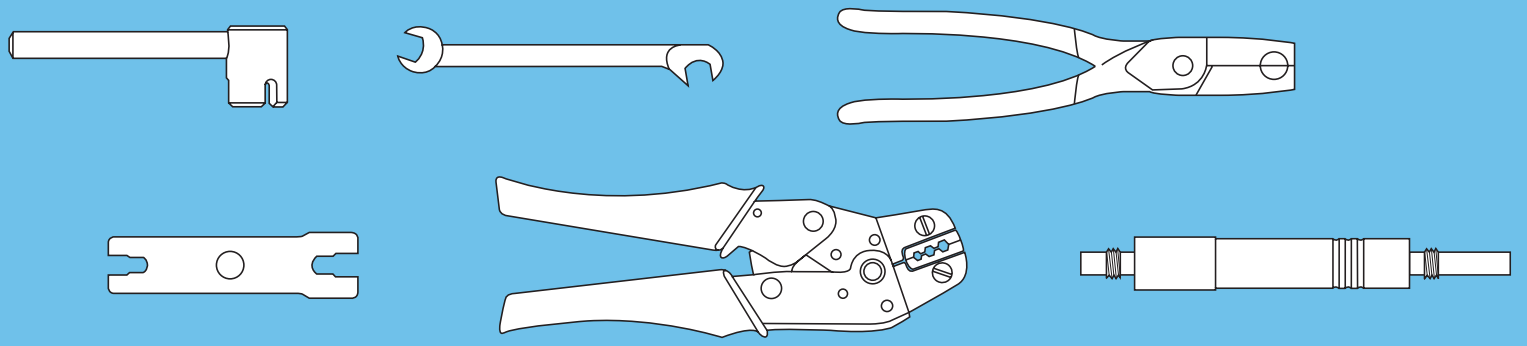

TOOLING

Accessories



male



female

FGG-EGG Insulators

Insulators for 2B-5B and 2K-5K series vary according to the fibre optic contact type chosen.
They are only necessary as replacement item when electrical crimp contacts are available.

	FO Contact Type F1	Insulator part number Male contact	Female contact
2B 2K	96A	FGG.2B.302.XLY	EGG.2B.402.XLY
	96C	FGG.2B.304.XLY	EGG.2B.404.XLY
	96E	FGG.2B.306.XLY	EGG.2B.406.XLY
	96J	FGG.2B.310.XL	EGG.2B.410.XL
3B 3K	07A	FGG.3B.302.CL	EGG.3B.402.CL
	96X	FGG.3B.322.XL	EGG.3B.422.XL
	97C	FGG.3B.344.XL	EGG.3B.444.XL
	97E	FGG.3B.346.XL	EGG.3B.446.XL
	97J	FGG.3B.350.XL	EGG.3B.450.XL
	97R	FGG.3B.356.XL	EGG.3B.456.XL
4B 4K	07C	FGG.4B.304.CL	EGG.4B.404.CL
	99H	FGG.4B.379.XL	EGG.4B.479.XL
	97F	FGG.4B.347.XL	EGG.4B.447.XL
	97L	FGG.4B.352.XL	EGG.4B.452.XL
	97R	FGG.4B.356.XL	EGG.4B.456.XL
	97T	FGG.4B.358.XL	EGG.4B.458.XL
	98E	FGG.4B.366.XL	EGG.4B.466.XL
	98L	FGG.4B.385.XL	EGG.4B.485.XL
5B 5K	07J	FGG.5B.340.CL	EGG.5B.440.CL

	FO Contact Type F2	Insulator part number Male contact	Female contact
2B 2K	92A	FGG.2B.302.EL	EGG.2B.402.EL
	92C	FGG.2B.304.EL	EGG.2B.404.EL
	92E	FGG.2B.306.EL	EGG.2B.406.EL
	92J	FGG.2B.310.EL	EGG.2B.410.EL
3B 3K	03A	FGG.3B.302.EL	EGG.3B.402.EL
	92X	FGG.3B.322.EL	EGG.3B.422.EL
	93B	FGG.3B.344.EL	EGG.3B.444.EL
	93E	FGG.3B.346.EL	EGG.3B.446.EL
	93J	FGG.3B.350.EL	EGG.3B.450.EL
	93R	FGG.3B.356.EL	EGG.3B.456.EL
	87E	FGG.3B.376.WL	EGG.3B.476.WL
	87R	FGG.3B.386.WL	EGG.3B.486.WL
4B 4K	03C	FGG.4B.304.EL	EGG.4B.404.EL
	95D	FGG.4B.375.EL	EGG.4B.475.EL
	93E	FGG.4B.346.EL	EGG.4B.446.EL
	93L	FGG.4B.352.EL	EGG.4B.452.EL
	93R	FGG.4B.356.EL	EGG.4B.456.EL
	93T	FGG.4B.358.EL	EGG.4B.458.EL
	94E	FGG.4B.366.EL	EGG.4B.466.EL
	94L	FGG.4B.385.EL	EGG.4B.485.EL
	05C	FGG.4B.304.WL	EGG.4B.404.WL
	88E	FGG.4B.366.WL	EGG.4B.466.WL
5B 5K	03J	FGG.5B.340.EL	EGG.5B.440.EL
	03N	FGG.5B.354.EL	EGG.5B.454.EL
	956	FGG.5B.356.WLL	EGG.5B.456.WLL
	94B	FGG.5B.383.EL	EGG.5B.483.EL



FGG-EGG Crimp electrical contacts

	FO Contact Types F1	F2	ø A Contact LV	Contact part number Male	Female
2B 2K	96A	92A	0.9	FGG.2B.560.ZZC	EGG.2B.660.ZZM
	96C	92C	0.7	FGG.2B.555.ZZC	EGG.2B.655.ZZM
	96E	92E	0.7	FGG.2B.555.ZZC	EGG.2B.655.ZZM
	96J	92J	0.7	FGG.2B.555.ZZC	EGG.2B.655.ZZM
3B 3K	97C	93B	0.9	FGG.3B.560.ZZC	EGG.3B.660.ZZM
	97E	93E	0.9	FGG.3B.560.ZZC	EGG.3B.660.ZZM
	–	87E	0.9	FGG.3B.560.ZZC	EGG.3B.660.ZZM
	97J	93J	0.7	FGG.3B.555.ZZC	EGG.3B.655.ZZM
	97R	93R	0.7	FGG.3B.555.ZZC	EGG.3B.655.ZZM
	96X	92X	0.7	FGG.3B.555.ZZC	EGG.3B.655.ZZM
	–	87R	0.7	FGG.3B.555.ZZC	EGG.3B.655.ZZM

	FO Contact Types F1	F2	ø A Contact LV +HV	Contact part number Male	Female
4B 4K	–	95D	1.3	FGG.4B.565.ZZC	EGG.4B.665.ZZM
	–	93E	1.3[1)]	FGG.4K.565.ZZCY	EGG.3B.665.ZZM
			0.9	FGG.4B.560.ZZC	EGG.4B.660.ZZM
	97F	–	1.3	FGG.4B.565.ZZC	EGG.4B.665.ZZM
			0.9	FGG.4B.560.ZZC	EGG.4B.660.ZZM
	97R	93R	0.9	FGG.4B.560.ZZC	EGG.4B.660.ZZM
	97L	93L	0.9	FGG.4B.560.ZZC	EGG.4B.660.ZZM
	98L	94L	0.7	FGG.4B.555.ZZC	EGG.4B.655.ZZM
	97T	93T	0.7	FGG.4B.555.ZZC	EGG.4B.655.ZZM
	–	88E	0.7	FGG.4B.555.ZZC	EGG.4B.655.ZZM
	99H	–	0.7	FGG.4B.555.ZZC	EGG.4B.655.ZZM
	98E	94E	0.7	FGG.4B.555.ZZC	EGG.4B.655.ZZM
5B 5K	–	94B	2.0	FGG.5B.575.ZZC	EGG.5B.675.ZZM
	–	956	2.0[1)]	FGG.3B.575.ZZC	EGG.4B.675.ZZM
			1.6[1)]	FGG.4B.570.ZZC	EGG.2B.670.ZZM
	–	90C	1.6[1)]	FGG.4B.570.ZZC	EGG.2B.670.ZZM

Note: [1)] Arrangements with special contact length.



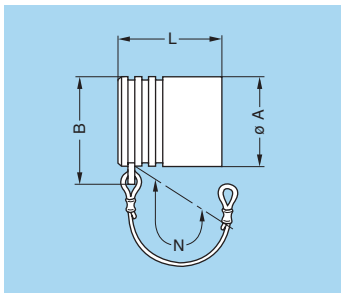

BFG Plug caps

Part number	Series	Dimensions (mm)			
		A	B	L	N[1)]
BFG.00.100 PCSG	00	7.5	9.8	10.0	60
BFG.0B.100.PCSG	0B	9.5	12.5	11.2	85
BFG.2B.100.PCSG	2B	15.0	18.0	15.0	85
BFG.3B.100.PCSG	3B	18.5	22.0	18.5	95

- Body material: Polyoxymethylene (POM) grey (or black)
- Cord material: Polypropylene core and PVC coat, grey (or black)
- Crimp ferrule material: Nickel-plated brass
- Gasket material: Silicone rubber
- Maximum operating temperature: 100°C
- Watertightness: IP61 according to IEC 60529

Note: 1) the tolerance on this dimension is ± 5 mm.
This cap is available only with an alignment key (G). Upon request this cap can be supplied in black and the last letter «G» of the part number should be replaced with «N».

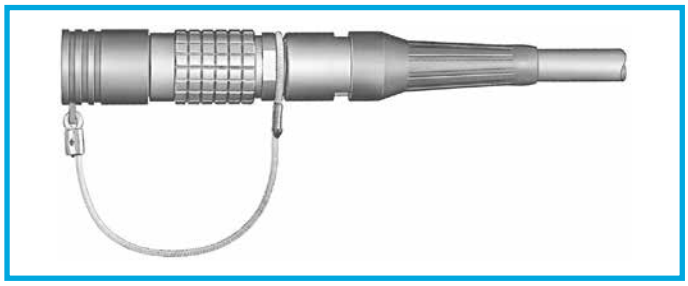

Fitting the cord

Slide the plug into the loop of the cord. Place the loop into the groove in front of the collet nut and tighten the loop.



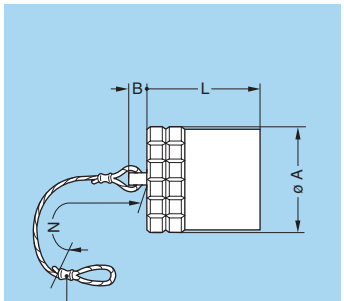

BFG Plug caps with key (G)

Part number	Series	Dimensions (mm)			
		A	B	L	N[1)]
BFG.0K.100.NAS	0K	14.0	6	12.5	85
BFG.2K.100.NAS	2K	19.5	6	17.5	85
BFG.3K.100.NAS	3K	23.0	6	22.0	120
BFG.4B.100.NAS	4B	25.0	10	20.2	120
BFG.4K.100.NAS	4K	29.0	10	22.5	120
BFG.5B.100.NAS	5B	36.0	10	27.2	150
BFG.5K.100.NAS	5K	44.0	10	27.0	150

- Body material: Nickel-plated brass (Ni 3µm)
- Lanyard material: Stainless steel
- Crimp ferrule material: Nickel-plated brass + polyolefin
- O-ring material: Silicone rubber or FPM
- Operating temperature: -50°/135°C (Silicone rubber & Polyolefine)
- Watertightness: IP68 according to IEC 60529 for K series

Note: 1) the tolerance on this dimension is ± 5 mm.
This cap is available only with an alignment key (G).
The last letter «S» of the part number stands for the material of the O-ring (silicone rubber). O-rings made from FPM are also available; if required, replace the letter «S» by «V».



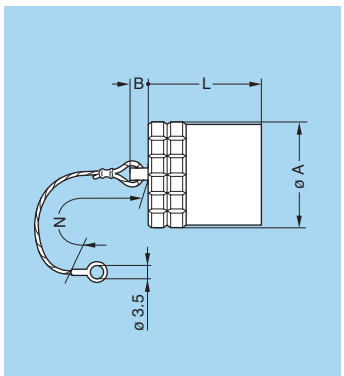

BHG Plug caps, nut fixing or flange

Part number	Series	Dimensions (mm)			
		A	B	L	N[1)]
BHG.0K.100.NAS	0K	14.0	6	12.5	85
BHG.2K.100.NAS	2K	19.5	6	17.5	85
BHG.3K.100.NAS	3K	23.0	6	22.0	120
BHG.4B.100.NAS	4B	25.0	10	20.2	120
BHG.4K.100.NAS	4K	29.0	10	22.5	120
BHG.5B.100.NAS	5B	36.0	10	27.2	150
BHG.5K.100.NAS	5K	44.0	10	27.0	150

- Body material: Nickel-plated brass (Ni 3µm)
- Lanyard material: Stainless steel
- Crimp ferrule material: Nickel-plated brass + polyolefin
- O-ring material: Silicone rubber or FPM
- Operating temperature: -50°/135°C (Silicone rubber & Polyolefine)
- Watertightness: IP68 according to IEC 60529 for K series

Note: 1) the tolerance on this dimension is ± 5 mm.
This cap is available only with an alignment key (G).
The last letter «S» of the part number stands for the material of the O-ring (silicone rubber). O-rings made from FPM are also available; if required, replace the letter «S» by «V».



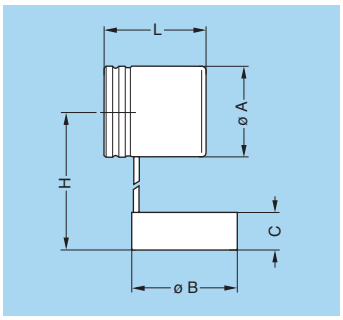

BFA Plug cap

Part number	Series	Dimensions (mm)				
		A	B	C	H	L
BFA.3K.170.800EN	3K	24	28	10	80	27

- Material: black EPDM

Note: These caps are suitable for use with any alignment key configuration.



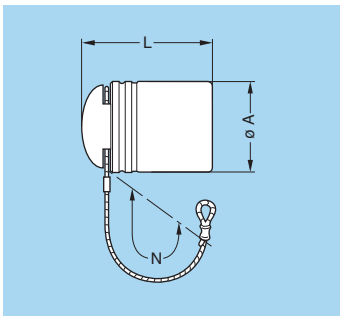

BFG Plug cap

Part number	Series	Dimensions (mm)		
		A	L	N[1)]
BFG.3K.100.EA	3K	24	30	155

- Material: black ALCRYN®
- Lanyard material: Stainless steel
- Crimp ferrule material: Stainless steel AISI 304 + polyolefin

Note: [1)] the tolerance on this dimension is ± 5 mm.
These caps are suitable for use with any alignment key configuration.



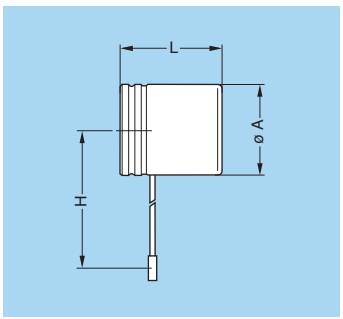

BHA Plug cap

Part number	Series	Dimensions (mm)		
		A	H	L
BHA.3K.100.715EN	3K	24	80	27

- Material: black ALCRYN®

Note: These caps are suitable for use with any alignment key configuration.



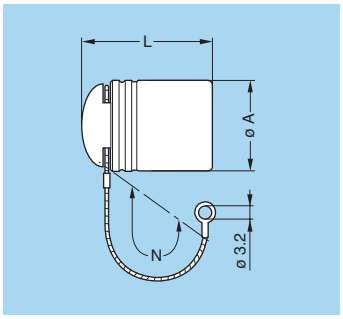

BHA Plug cap

Part number	Series	Dimensions (mm)		
		A	L	N[1)]
BHA.3K.100.EAN	3K	24	30	120

- Material: black ALCRYN®
- Lanyard material: Stainless steel
- Crimp ferrule material: Stainless steel AISI 304 + polyolefin

Note: [1)] the tolerance on this dimension is ± 5 mm.
These caps are suitable for use with any alignment key configuration.

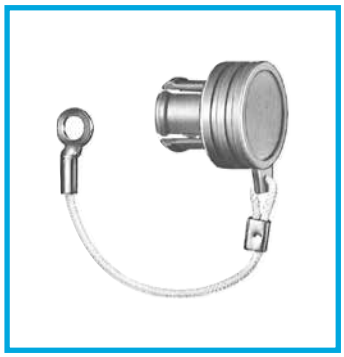

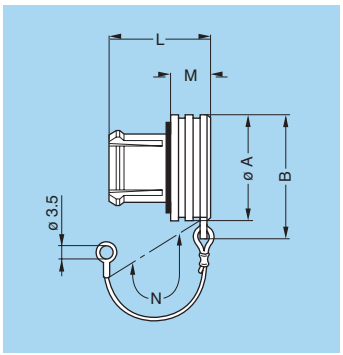

BRA Blanking caps for fixed sockets and free straight sockets

Part number	Series	Dimensions (mm)				
		A	B	L	M	N[1)]
BRA.00.200.PCSG	00	7.5	9.8	9.0	3.5	60
BRA.0B.200.PCSG	0B	10.0	12.5	11.0	4.8	60
BRA.2B.200.PCSG	2B	18.0	21.0	14.5	6.0	60
BRA.3B.200.PCSG	3B	22.0	25.5	17.0	7.0	60

- Body material: Polyoxymethylene (POM) grey (or black)
- Cord material: Polypropylene core and PVC coat, grey (or black)
- Crimp ferrule material: Nickel-plated brass
- Gasket material: Silicone rubber
- Maximum operating temperature: 100°C
- Watertightness: IP61 according to IEC 60529

Note: [1)] the tolerance on this dimension is ± 5 mm.
These caps are suitable for use with any alignment key configuration.
On request this cap can be supplied in black. If so, replace the last letter «G» of the part number by «N».



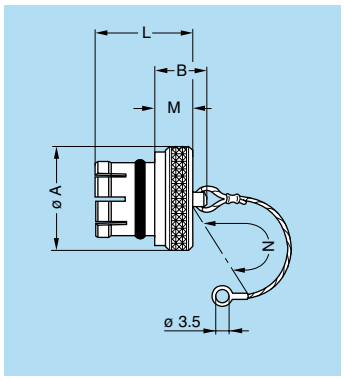

BRE Blanking caps for fixed and free sockets

Part number	Series	Dimensions (mm)				
		A	B	L	M	N[1)]
BRE.00.200.NAS	00	8	9.5	8.8	3.5	60
BRE.0S.200.NAS	0B	10	10.5	10.5	4.5	85
BRE.2S.200.NAS	2B	18	12.0	14.0	6.0	85
BRE.3S.200.NAS	3B	22	14.0	18.0	8.0	120
BRE.4S.200.NAS	4B	28	20.0	23.0	10.0	120
BRE.5S.200.NAS	5B	40	22.0	30.0	12.0	150

- Body material: Nickel-plated brass (Ni 3 µm)
- Lanyard material: Stainless steel
- Crimp ferrule material: Nickel-plated brass + polyolefin
- O-ring material: Silicone rubber or FPM
- Operating temperature: -50°/135°C (Silicone rubber & Polyolefine)

Note: 1) the tolerance on this dimension is ± 5 mm.
These caps are suitable for use with any alignment key configuration. The last letter «S» of the part number stands for the O-ring material (silicone rubber). O-rings made from FPM are also available; if required, replace the letter «S» by «V».



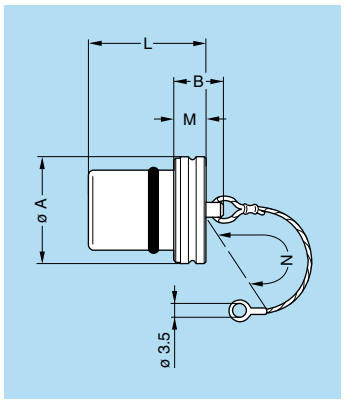

BRE Blanking caps for fixed and free sockets

Part number	Series	Dimensions (mm)				
		A	B	L	M	N[1)]
BRE.0K.200.NAS	0K	15.0	10	15.0	4	85
BRE.2K.200.NAS	2K	20.5	14	24.0	8	85
BRE.3K.200.NAS	3K	24.0	14	28.0	8	120
BRE.4K.200.NAS	4K	30.0	20	30.5	10	120
BRE.5K.200.NAS	5K	44.0	22	37.0	12	150

- Body material: Nickel-plated brass (Ni 3 µm)
- Lanyard material: Stainless steel
- Crimp ferrule material: Nickel-plated brass + polyolefines
- O-ring material: Silicone rubber or FPM
- Operating temperature: -50°/135°C (Silicone rubber & Polyolefine)
- Watertightness: IP68 according to IEC 60529

Note: 1) the tolerance on this dimension is ± 5 mm.
These caps are suitable for use with any alignment key configuration. The last letter «S» of the part number stands for the O-ring material (silicone rubber). O-rings made from FPM are also available; if required, replace the letter «S» by «V».



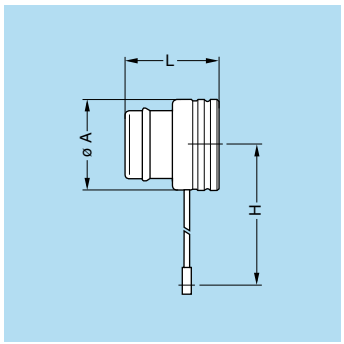

BRA Blanking cap for free sockets

Part number	Series	Dimensions (mm)		
		A	H	L
BRA.3K.100.715EN	3K	24	80	25

- Material: black ALCRYN®

Note: These caps are suitable for use with any alignment key configuration.



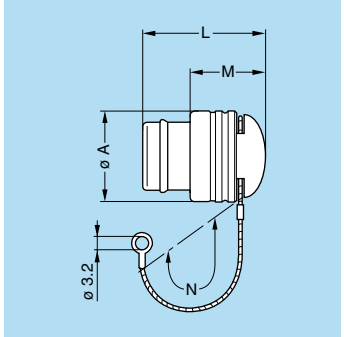

BRA Blanking cap for free sockets

Part number	Series	Dimensions (mm)		
		A	L	N[1)]
BRA.3K.200.EAN	3K	24	26	120

- Material: black ALCRYN®
- Lanyard material: Stainless steel
- Crimp ferrule material: Stainless steel AISI 304 + polyolefin

Note: 1) the tolerance on this dimension is ± 5 mm.
These caps are suitable for use with any alignment key configuration.



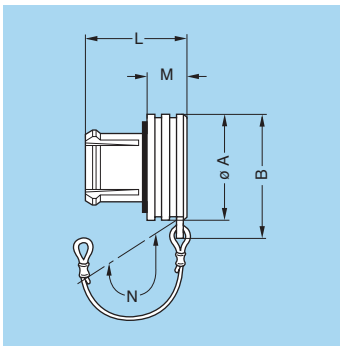

BRD Blanking caps for free sockets

Part number	Series	Dimensions (mm)				
		A	B	L	M	N[1)]
BRD.00.200.PCSG	00	7.5	9.8	9.0	3.5	85
BRD.0B.200.PCSG	0B	10.0	12.5	11.0	4.8	85
BRD.2B.200.PCSG	2B	18.0	21.0	14.5	6.0	85
BRD.3B.200.PCSG	3B	22.0	25.5	17.0	7.0	95

- Body material: Polyoxymethylene (POM) grey (or black)
- Cord material: Polypropylene core and PVC coat, grey (or black)
- Crimp ferrule material: Nickel-plated brass
- Gasket material: Silicone rubber
- Maximum operating temperature: 100°C
- Watertightness: IP61 according to IEC 60529

Note: 1) the tolerance on this dimension is ± 5 mm.
On request this cap is available in black. If required, replace the last letter «G» of the part number by «N».

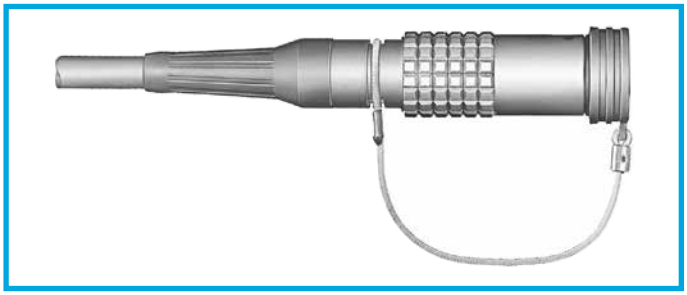

Fitting the cord

Slide the socket into the loop of the cord.
Place the loop into the groove in front of the collet nut.
Tighten the loop.



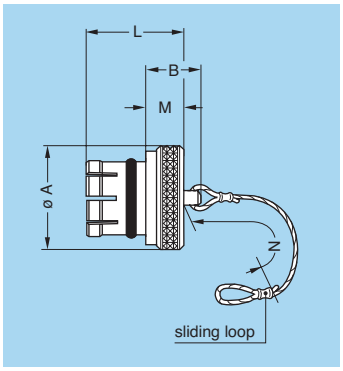

BRF Blanking caps for free sockets

Part number	Series	Dimensions (mm)				
		A	B	L	M	N[1)]
BRF.00.200.NAS	00	8	7.5	8.8	3.5	85
BRF.0S.200.NAS	0B	10	9.5	10.5	4.5	85
BRF.2S.200.NAS	2B	18	12.0	14.0	6.0	85
BRF.3S.200.NAS	3B	22	14.0	18.0	8.0	120
BRF.4S.200.NAS	4B	28	20.0	23.0	10.0	120
BRF.5S.200.NAS	5B	40	22.0	30.0	12.0	150

- Body material: Nickel-plated brass (Ni 3 µm)
- Lanyard material: Stainless steel
- Crimp ferrule material: Nickel-plated brass + polyolefin
- O-ring material: Silicone rubber or FPM
- Operating temperature: -50°/135°C (Silicone rubber & Polyolefine)

Note: 1) the tolerance on this dimension is ± 5 mm.
These caps are suitable for use with any alignment key configuration. The last letter «S» of the part number stands for the O-ring material (silicone rubber). O-rings made from FPM are also available; if required, replace the letter «S» by «V».



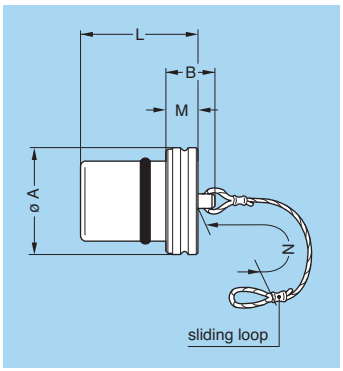

BRF Blanking caps for free sockets

Part number	Series	Dimensions (mm)				
		A	B	L	M	N[1)]
BRF.0K.200.NAS	0K	15.0	10	15.0	4	85
BRF.2K.200.NAS	2K	20.5	14	24.0	8	85
BRF.3K.200.NAS	3K	24.0	14	28.0	8	120
BRF.4K.200.NAS	4K	30.0	20	30.5	10	120
BRF.5K.200.NAS	5K	44.0	22	37.0	12	150

- Body material: Nickel-plated brass (Ni 3 µm)
- Lanyard material: Stainless steel
- Crimp ferrule material: Nickel-plated brass + polyolefin
- O-ring material: Silicone rubber or FPM
- Operating temperature: -50°/135°C (Silicone rubber & Polyolefine)
- Watertightness: IP68 according to IEC 60529

Note: 1) the tolerance on this dimension is ± 5 mm.
These caps are suitable for use with any alignment key configuration. The last letter «S» of the part number stands for the O-ring material (silicone rubber). O-rings made from FPM are also available; if required, replace the letter «S» by «V».

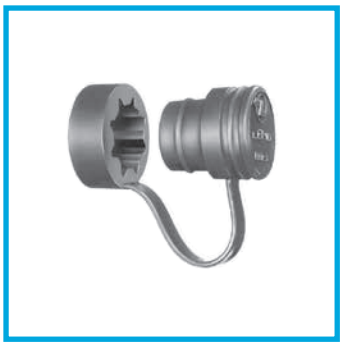

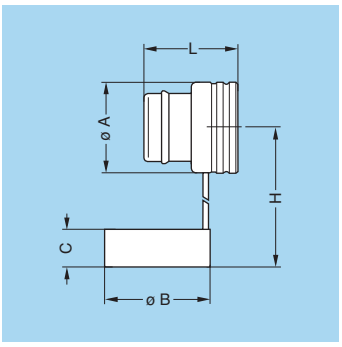

BRD Blanking caps for free sockets

Part number	Series	Dimensions (mm)				
		A	B	C	H	L
BRD.3K.170.800EN	3K	24	28	10	80	25

- Material: black EPDM

Note: These caps are suitable for use with any alignment key configuration.



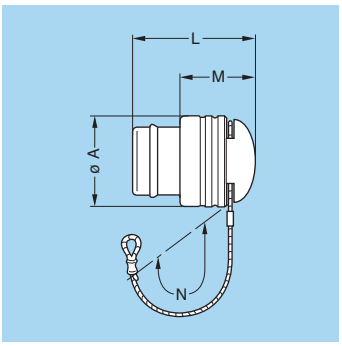

BRF Blanking caps for free sockets

Part number	Series	Dimensions (mm)		
		A	L	N[1)]
BRF.3K.200.EAN	3K	24	26	155

- Material: black ALCRYN®
- Lanyard material: Stainless steel
- Crimp ferrule material: Stainless steel AISI 304 + polyolefin

Note: 1) the tolerance on this dimension is ± 5 mm.
These caps are suitable for use with any alignment key configuration.

BRR Spring loaded dust caps for ERA, ERN and EG● sockets or PSA and PK● fixed sockets

BRR.●B.200.BSG



BRR.●S.200.PZVG



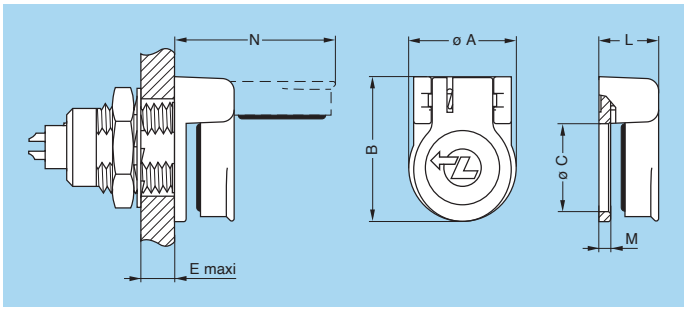

Part number	Series	Dimensions (mm)						
		A	B	C	E	L	M	N
BRR.0B.200.BSG	0B	11.0	14.8	9.0	5.8	6.1	1.2	16.5
BRR.2S.200.PZVG	2B	18.6	22.4	15.2	6.5	8.2	2.0	26.2
BRR.3S.200.PZVG	3B	22.5	26.5	18.2	9.0	8.8	2.5	30.8

Note: On request, this cap is available in grey or black. If so replace the last letter «G» of the part number by «N».

- Body material: POM (0B)
- Body material: PSU (2S/3S)
- Gasket material: Silicone (0B)
- Gasket material: FKM (2S/3S)
- Spring material: Stainless steel
- Axes material: Nickel-plated brass
- Maximum operating temperature: 100°C
- Watertightness: IP50 according to IEC 60529



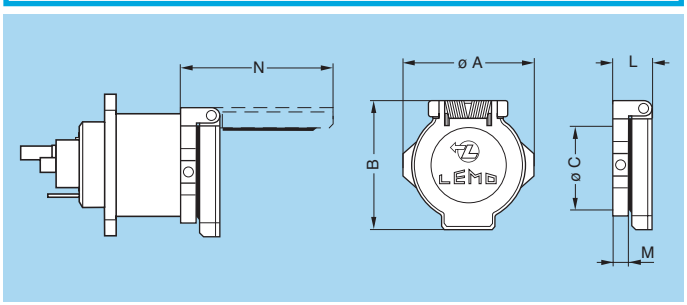

BRR Spring loaded dust cap for ED● and EB● fixed sockets

Part number	Series	Dimensions (mm)					
		A	B	C	L	M	N
BRR.3K.200.PZSG	3K	29	29	23	8.1	3	33.2

Note: On request, this cap is available in black. If so replace the last letter «G» of the part number by «N».

- Cap material: Polyoxymethylene (POM) grey (or black)
- Body material: Nickel-plated brass
- Gasket material: Silicone rubber
- Spring material: Stainless steel
- Axes material: Nickel-plated brass
- Maximum operating temperature: 100°C
- Watertightness: IP61 according to IEC 60529



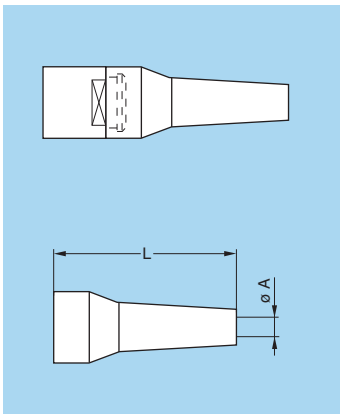

GM● Bend relief (TPU)

A bend relief made from thermoplastic polyurethane elastomer can be fitted over LEMO plugs and sockets that are supplied with a specially fitted nut.
These are available in nine different colours that match with the GRA insulating washers (see page 93).

Use the part numbers shown below to order this accessory separately.

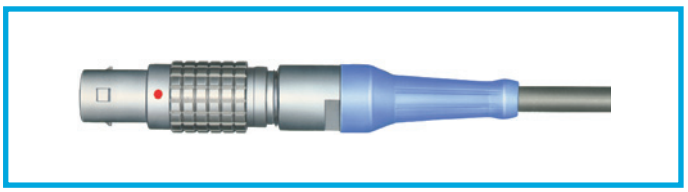

Main characteristics

- Material: TPU (Thermoplastic Polyurethane)
- Temperature range in dry atmosphere: -40°C to +80°C

Part number	Dimensions (mm)				Series	Part number of nut for fitting the bend relief
	Bend relief		Cable ø			
	A	L	max.	min.		
GMA.00.012.DG	1.2	22	1.4	1.1	00	FFM.00.131.LC
GMA.00.018.DG	1.8	22	2.1	1.8		
GMD.00.025.DG	2.5	22	2.8	2.5		
GMD.00.028.DG	2.8	22	3.1	2.8		
GMD.00.032.DG	3.2	22	3.5	3.2		
GMA.0B.025.DG	2.5	24	2.9	2.5	0B	FFM.0B.130.LC
GMA.0B.030.DG	3.0	24	3.4	3.0		
GMA.0B.035.DG	3.5	24	3.9	3.5	2B	FFM.2B.132.LC [1]
GMA.0B.040.DG	4.0	24	4.4	4.0		
GMA.0B.045.DG	4.5	24	5.2	4.5	0K	FFM.0E.130.LC
GMA.1B.040.DG	4.0	30	4.4	4.0	3B	FFM.3B.131.LC [2]
GMA.1B.045.DG	4.5	30	4.9	4.5		
GMA.1B.054.DG	5.4	30	6.0	5.4		
GMA.2B.040.DG	4.0	36	4.5	4.0	2B	FFM.2B.130.LC
GMA.2B.045.DG	4.5	36	5.0	4.5	4B	FFM.4B.132.LC [3]
GMA.2B.050.DG	5.0	36	5.5	5.0	2K	FFM.2E.130.LC
GMA.2B.060.DG	6.0	36	6.5	6.0	3K	FFM.3K.133.LC
GMA.2B.070.DG	7.0	36	7.7	7.0	4K	FFM.4K.132.LC
GMA.2B.080.DG	7.8	36	8.8	7.8	5K	FFM.5K.132.LC
GMA.3B.050.DG	4.5	42	5.2	4.5	3B	FFM.3B.130.LC
GMA.3B.060.DG	6.0	42	6.9	6.0	3K	FFM.3E.130.LC
GMA.3B.070.DG	7.0	42	7.9	7.0		
GMA.3B.080.DG	8.0	42	8.9	8.0	4K	FFM.4K.133.LC
GMA.3B.090.DG	9.0	42	10.0	9.0	5K	FFM.5K.131.LC
GMA.4B.080.DG	8.0	60	9.0	8.0	4B	FFM.4B.130.LC
GMA.4B.010.DG	10.0	60	10.9	10.0		
GMA.4B.011.DG	11.0	60	11.9	11.0	4K	FFM.3K.132.LC
GMA.4B.012.DG	12.0	60	13.0	12.0		
GMA.4B.013.DG	13.5	60	14.5	13.5	5K	FFM.5K.133.LC

Note: The last letter «G» of the part number indicates the grey colour of the bend relief. For ordering a bend relief with another colour, see table on page 92 and replace the letter «G» by the letter of the required colour.
See also detailed information for each series: B series on page 61: K series on page 61.

[1] For use only with connectors from series 2B equipped with cable fixing type M and where a bend relief from series 0B is used.
[2] For use only with connectors from series 3B equipped with cable fixing type M and where a bend relief from series 1B is used.
[3] For use only with connectors from series 4B equipped with cable fixing type M and where a bend relief from series 2B is used.



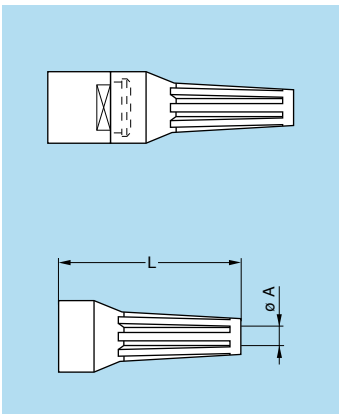

GM● Bend relief (Silicone)

A bend relief has been designed for connectors used in applications at high temperature or requiring vapor sterilization.

These bend reliefs are different from previous ones; their material, a silicone elastomer, is noted for its retention of flexibility over a wide temperature range. They are available in nine colours.

Use the part numbers shown below to order this accessory separately.

Main characteristics

- Material: Silicone elastomer VMQ
- Temperature range in dry atmosphere: -60°C to +200°C
- Temperature range in water steam: +140°C
- Inflammability: not flammable (no UL classification)

Part number	Dimensions (mm)				Series	Part number of nut for fitting the bend relief
	Bend relief		Cable ø			
	A	L	max.	min.		
GMA.0B.025.RG	2.5	27	2.9	2.5	0B	FFM.0B.130.LC
GMA.0B.030.RG	3.0	27	3.4	3.0		
GMA.0B.035.RG	3.5	27	3.9	3.5	2B	FFM.2B.132.LC [1]
GMA.0B.040.RG	4.0	27	4.4	4.0		
GMA.0B.045.RG	4.5	27	5.2	4.5	0K	FFM.0E.130.LC
GMA.1B.040.RG	4.0	34	4.4	4.0	3B	FFM.3B.131.LC [2]
GMA.1B.045.RG	4.5	34	5.0	4.5		
GMA.2B.040.RG	4.0	41	4.4	4.0	2B	FFM.2B.130.LC
GMA.2B.045.RG	4.5	41	5.0	4.5	4B	FFM.4B.132.LC [3]
GMA.2B.051.RG	5.1	41	5.6	5.1	2K	FFM.2E.130.LC
GMA.2B.057.RG	5.7	41	6.2	5.7	3K	FFM.3K.133.LC
GMA.2B.063.RG	6.3	41	7.0	6.3	4K	FFM.4K.132.LC
GMA.2B.071.RG	7.1	41	7.9	7.1	5K	FFM.5K.132.LC
GMA.2B.080.RG	8.0	41	9.0	8.0		

Note: The last letter «G» of the part number indicates the grey colour of the bend relief. For ordering a bend relief with another colour, see table on page 92 and replace the letter «G» by the letter of the required colour.
See also detailed information for each series: B series on page 61: K series on page 61.
[1] For use only with connectors from series 2B equipped with cable fixing type M and where a bend relief from series 0B is used.
[2] For use only with connectors from series 3B equipped with cable fixing type M and where a bend relief from series 1B is used.
[3] For use only with connectors from series 4B equipped with cable fixing type M and where a bend relief from series 2B is used.

Note: The selection of pigments, which should remain stable at high temperature, is limited by new regulations. For this reason, some colours will be a shade different from those used for Thermoplastic Polyurethane (TPU) bend reliefs. The selected solutions represent the best possible compromise.

Ref.	Colour
A	blue
B	white
G	grey
J	yellow
M	brown

Ref.	Colour
N	black
R	red
S	orange
V	green

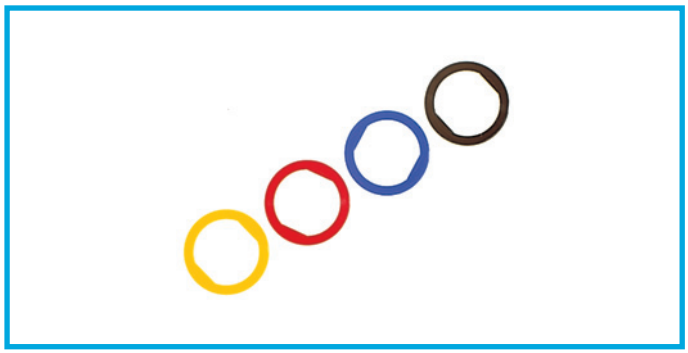

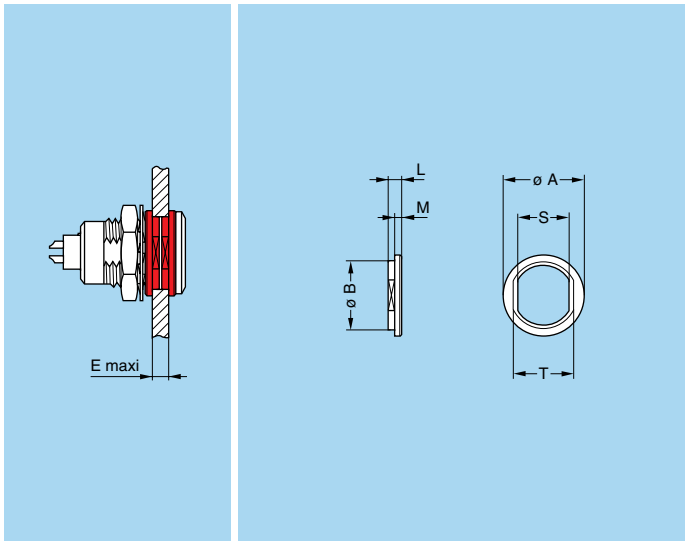

- Material: Polyamide
- Maximum operating temperature: 90°C

GRA Insulating washers

Sockets or plugs mounted on panels can be fitted with insulating washers. The nine colours available combined with those for the overall protective coverings with bend relief makes colour coding possible.

Part number	Series	Dimensions (mm)						
		A	B	E	L	M	S	T
GRA.00.269.GG	00	10.0	8.8	4.5	1.8	1.0	6.4	8.0
GRA.0S.269.GG	0B	12.0	10.8	6.0	1.8	1.0	8.3	9.9
GRA.2S.269.GG	2B	21.1	17.9	7.3	2.3	1.3	13.6	16.2
GRA.3S.269.GG	3B	25.0	21.8	10.3	2.2	1.2	16.7	20.2
GRA.4S.269.GG	4B	31.9	28.7	10.5	2.5	1.5	23.6	27.1

Note: Insulating washers for series 5B are available on request.

Caution: These insulating washers can be used with fixed and straight sockets with across flat dimension S1 equivalent to the S dimension of the washer.

Ref.	Colour
A	blue
B	white
G	grey
J	yellow
M	brown

Ref.	Colour
N	black
R	red
S	orange
V	green

Note: The last letter «G» of the part number indicates the colour grey for the insulating washer. To obtain an insulating washer of another colour, refer to the table above and change the letter «G» of the part number to the corresponding letter of the colour required.

For the panel cut-out, please consult chapter «Panel cut-out» on pages 18, 26 and 45.

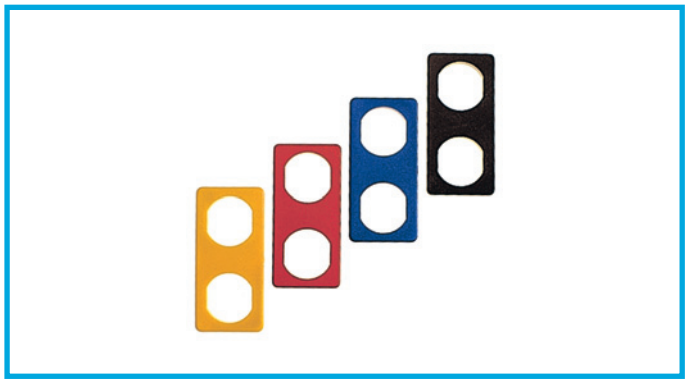

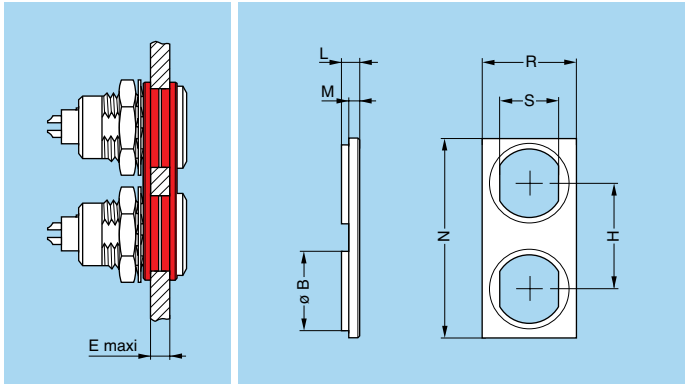

- Material: Polyamide
- Maximum operating temperature: 90°C

GRC Double panel washers

Double panel washers have been designed to make the drilling of panel holes easier for mounting fixed and straight sockets. The combination of the nine different colours of the double panel washers and of the overall protective coverings with bend relief makes colour coding possible.

Part number	Series	Dimensions (mm)							
		B	E	H	L	M	N	R	S
GRC.0S.260.HG	0B	10.9	5	14	2.5	1.5	26.5	12.5	8.3

Caution: These double panel washers can be used with fixed or free sockets with across flat dimension S1 equivalent to the S dimension of the washer.

Ref.	Colour
A	blue
B	white
G	grey
J	yellow
M	brown

Ref.	Colour
N	black
R	red
S	orange
V	green

Note: The last letter «G» of the washer's part number indicates the colour grey. For other colours, refer to the above table and replace letter «G» by the one corresponding to the colour required.

For the panel cut-out, please consult chapter «Panel cut-out» on page 26.

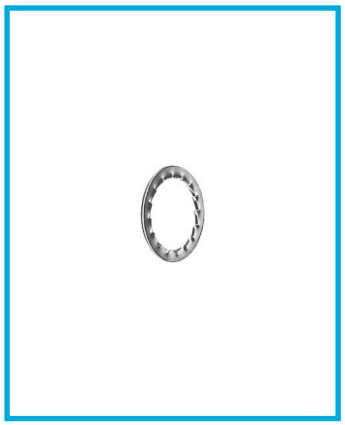

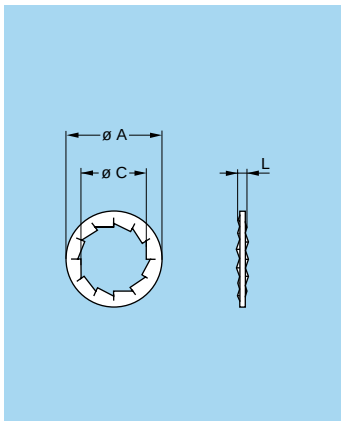

GBA Locking washers

Part number	Series	Dimensions (mm)		
		A	C	L
GBA.00.250.FN	00	9.5	7.1	1.0
GBA.0S.250.FN	0B	12.5	9.1	1.0
GBA.2S.250.FN	2B	19.5	15.1	1.2
GBA.3S.250.FN	3B	25.0	18.1	1.4
GBA.4S.250.FN	4B	32.0	25.1	1.4

Note: To order this accessory separately, use the above part numbers.

- Material: Nickel-plated bronze (3 µm)



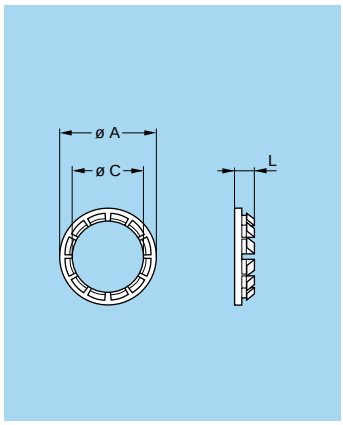

GBB Tapered washers

Part number	Series	Dimensions (mm)		
		A	C	L
GBB.00.250.LN	00	9	7.1	2.0
GBB.0S.250.LN	0B	11	9.1	2.5
GBB.2S.250.LN	2B	18	15.1	4.0
GBB.3S.250.LN	3B	22	18.1	4.5
GBB.4S.250.LN	4B	28	25.2	5.0
GBB.5S.250.LN	5B	40	35.2	7.5

Note: Sockets of series 5B are always supplied with a tapered washer. To order this accessory separately, use the above part numbers.

- Material: Nickel-plated brass (3 µm)



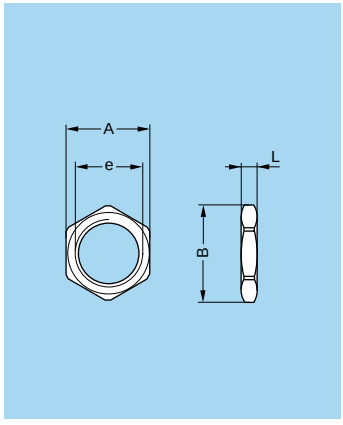

GEA Hexagonal nuts

Part number	Series	Dimensions (mm)			
		A	B	e	L
GEA.00.240.LN	00	9	10.2	M7 x 0.50	2.0
GEA.0S.240.LN	0B	11	12.4	M 9 x 0.60	2.0
GEA.0E.240.LN	0K	17	19.2	M14 x 1.00	2.5
GEA.2S.240.LN	2B	17	19.2	M15 x 1.00	2.7
GEA.2E.240.LN	2K	24	27.0	M20 x 1.00	4.0
GEA.3S.240.LN	3B	22	25.0	M18 x 1.00	3.0
GEA.3E.240.LN	3K	30	34.0	M24 x 1.00	5.0
GEA.4S.240.LN	4B	30	34.0	M25 x 1.00	5.0
GEA.4E.240.LN	4K	36	40.5	M30 x 1.00	7.0

- Material:
  – Nickel-plated brass (3 µm)
  – Natural anodized aluminium alloy
  – Stainless steel

Note: To order this part separately, use the above part numbers. The last letters «LN» of the part number refer to the nut material and treatment. If a nut in aluminium alloy or stainless steel is desired, replace the last letters of the part number by «PT» or «AZ» respectively.

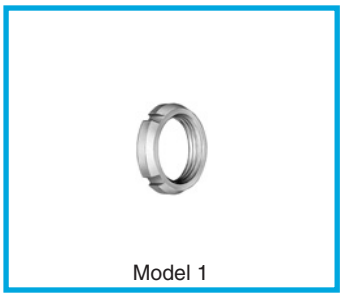

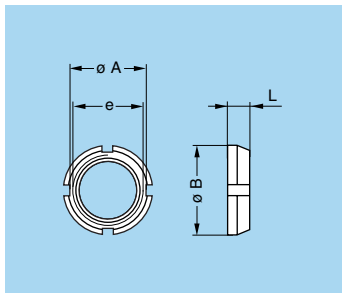



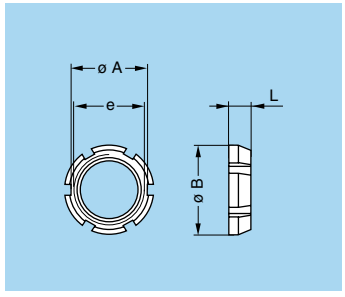

GEG Notched nuts

Part number	Series	Model	Dimensions (mm)			
			A	B	e	L
GEG.00 240.LC	00	1	8.7	10	M7 x 0.5	2.5
GEG.0S.240.LC	0B	1	10.5	12	M9 x 0.6	2.5
GEG.0E.240.LC	0K	1	15.8	18	M14 x 1.0	3.5
GEG.2S.240.LC	2B	2	17.5	20	M15 x 1.0	3.5
GEG.2E.240.LC	2K	2	22.5	25	M20 x 1.0	3.5

- Material: Chrome-plated brass (Ni 3 µm + Cr 0.3 µm)

Note: 00, 0B and 2B series fixed and free sockets for back panel mounting are always delivered with this notched nut.
To order this accessory separately, use the above part numbers.

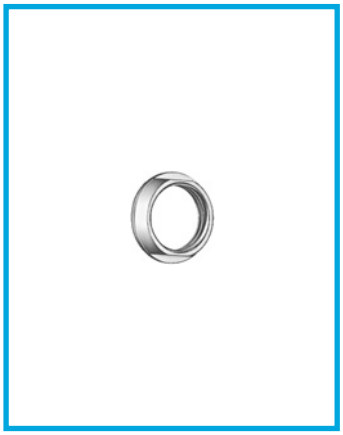

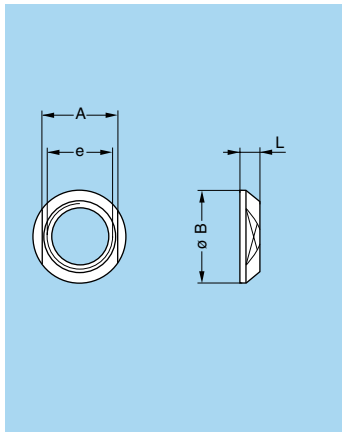

GEC Conical nuts

Part number	Series	Dimensions (mm)				
		A	B	e	L	S1
GEC.00 240.LC	00	8	10.0	M7 x 0.5	2.5	8
GEC.0S.240.LC	0B	10	12.0	M9 x 0.6	2.5	10
GEC.0E.240.LC	0K	16	18.0	M14 x 1.0	3.0	16
GEC.2S.240.LC	2B	17	20.0	M15 x 1.0	3.8	17
GEC.2E.240.LC	2K	22	25.0	M20 x 1.0	5.0	22
GEC.3S.240.LC	3B	20	24.0	M18 x 1.0	4.5	20
GEC.3E.240.LC	3K	27	30.0	M24 x 1.0	4.5	27
GEC.4S.240.LC	4B	27	30.0	M25 x 1.0	4.5	27
GEC.4K.241.LC	4K	32	35.5	M30 x 1.0	5.0	32
GEC.5S.240.LC	5B	37	41.0	M35 x 1.0	5.0	37

- Material: Chrome-plated brass (Ni 3 µm + Cr 0.3 µm)

Note: 3B, 3K, 4B, 4K, 5B and 5K series fixed and free sockets for back panel mounting are always delivered with a conical nut. To order this accessory separately, use the part numbers in the table above.

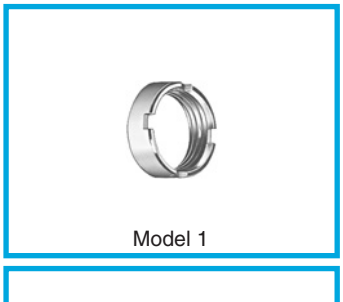

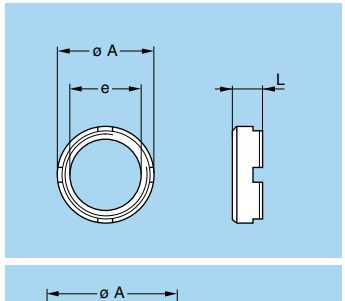

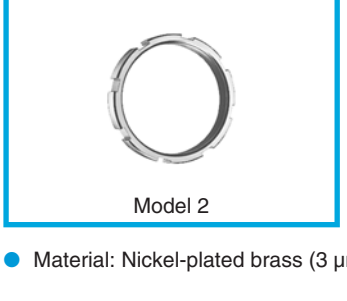

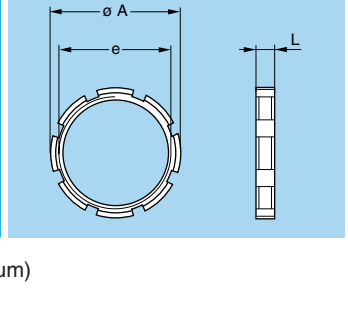

GEB Round nuts

Part number	Series	Model	Dimensions (mm)		
			A	e	L
GEB.00.240.LN	00	1	9.0	M7 x 0.50	4.0
GEB.0S.240.LN	0B	1	11.0	M9 x 0.60	4.0
GEB.2S.240.LN	2B	1	18.0	M15 x 1.00	5.5
GEB.3S.240.LN	3B	1	22.0	M18 x 1.00	5.5
GEB.4S.240.LN	4B	1	28.0	M25 x 1.00	6.0
GEB.5S.240.LN	5B	2	40.0	M35 x 1.00	8.0
GEB.5E.240.LN	5K	2	54.0	M45 x 1.50	8.0

- Material: Nickel-plated brass (3 µm)

Note: 5B and 5K series sockets are always supplied with model 2 round nuts. To order this accessory separately, use the part numbers in the table above.



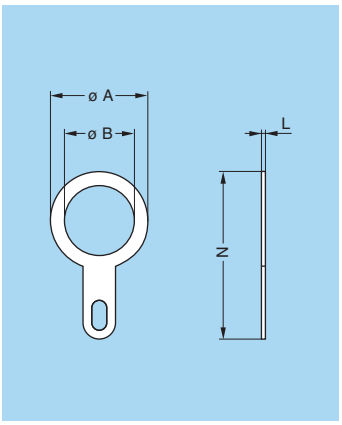

GCA Earthing washers

Part number	Series	Dimensions (mm)			
		A	B	L	N
GCA.00.255.LT	00	9.5	7.1	0.4	18.2
GCA.0S.255.LT	0B	13.0	9.1	0.4	22.0
GCA.0E.255.LT	0K	17.0	14.1	0.5	27.5
GCA.2S.255.LT	2B	20.0	15.2	0.5	32.0
GCA.2E.255.LT	2K	25.0	20.2	0.5	39.0
GCA.3S.255.LT	3B	25.0	18.2	0.5	39.0
GCA.4S.255.LT	4B	35.0	25.6	0.6	50.0
GCA.4E.255.LT	4K	35.0	30.6	0.6	50.0
GCA.5S.255.LT	5B	42.0	35.1	0.3	57.5

- Material: CuSnZn plated brass (2 µm)

Tooling

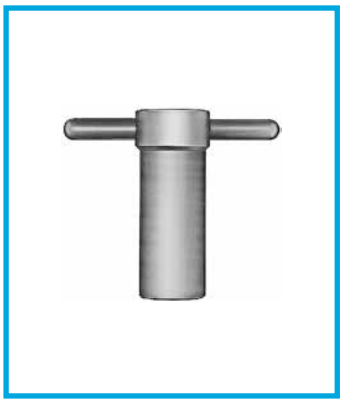

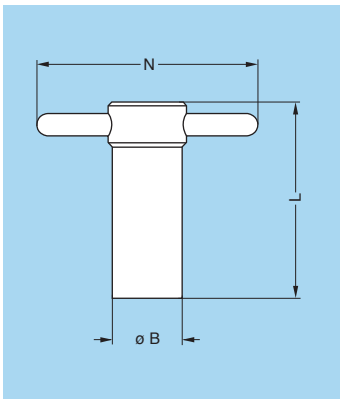

DCG Spanners for hexagonal nuts

Part number	Series	Dim. (mm)			Part number of the nut (page 94)
		B	L	N	
DCG.91.149.0TN	00	14	40	50	GEA.00.240.LN
DCG.91.161.1TN	0B	16	45	52	GEA.0S.240.LN
DCG.91.231.7TN	2B	23	62	68	GEA.2S.240.LN
DCG.91.282.2TN	3B	28	76	73	GEA.3S.240.LN

- Material: Blackened steel

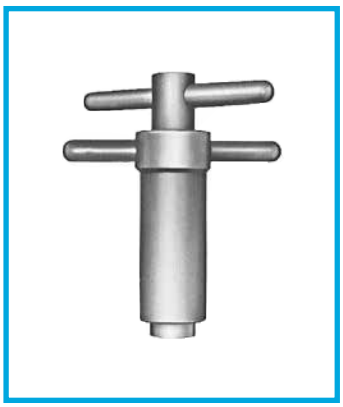

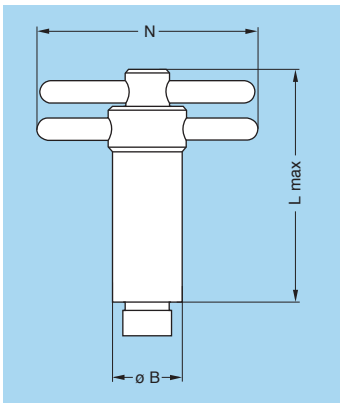

DCA Spanners for hexagonal nuts, with alignment of the sockets by the flats

Part number	Series	Dim. (mm)			Part number of the nut (page 94)
		B	L	N	
DCA.91.149.0TN	00	14	65	50	GEA.00.240.LN
DCA.91.161.1TN	0B	16	73	52	GEA.0S.240.LN
DCA.91.231.7TN	2B	23	100	68	GEA.2S.240.LN
DCA.91.282.2TN	3B	28	120	73	GEA.3S.240.LN

- Material: Blackened steel

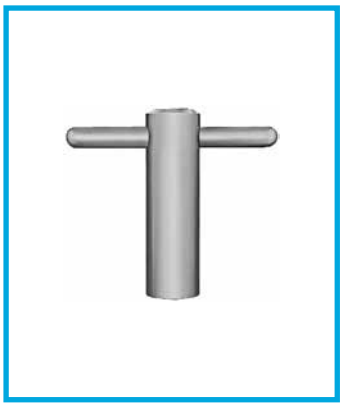

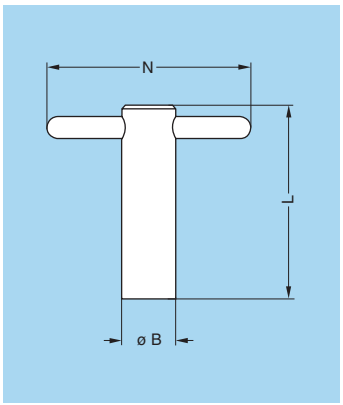

DCB Spanners type wrench for Model 1 round nuts

Part number	Series	Dim. (mm)			Part number of the nut (page 95)
		B	L	N	
DCB.91.119.0TN	00	11	40	50	GEB.00.240.LN
DCB.91.131.1TN	0B	13	45	50	GEB.0S.240.LN
DCB.91.201.8TN	2B	20	62	65	GEB.2S.240.LN
DCB.91.242.2TN	3B	24	76	70	GEB.3S.240.LN

- Material: Blackened steel



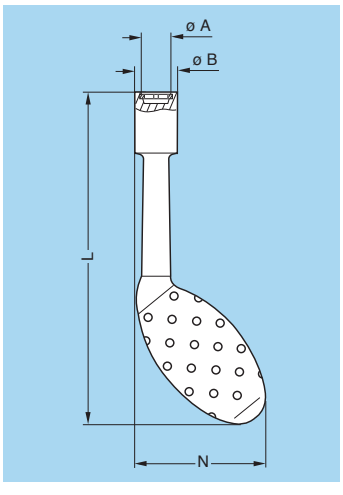

DCH Spanners for conical nut

Part number	Series	Dimensions (mm)				Part number of the nut (p. 95)
		A	B	L	N	
DCH.91.101.PN	00	10.1	12.8	124	48.3	GEC.00.240.LC
DCH.91.121.PN	0B	12.1	14.8	124	49.3	GEC.0S.240.LC
DCH.91.201.PN	2B	20.1	22.8	129	53.5	GEC.2S.240.LC

- Material: Dark grey polyurethane

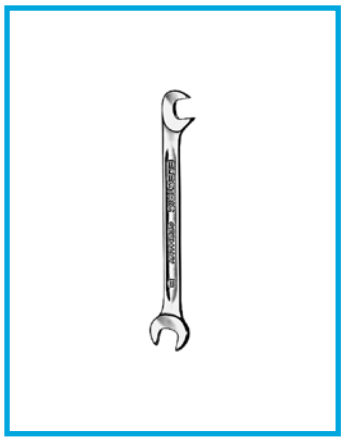

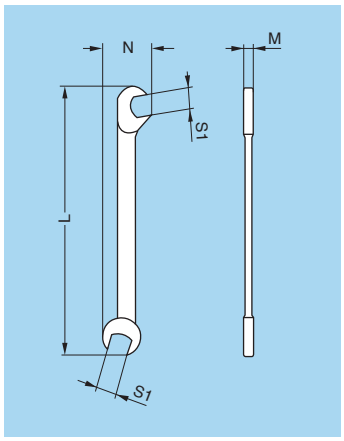

DCP Flat spanners for collet nut

Part number	Series	Dimensions (mm)			
		L	M	N	S1
DCP.99.045.TC	00	70	2	10.5	4.5
DCP.99.050.TC	00	78	2	12.6	5.0
DCP.99.055.TC	00	78	2	12.6	5.5
DCP.99.060.TC	00	78	2	12.6	6.0

- Material: Chrome-plated steel



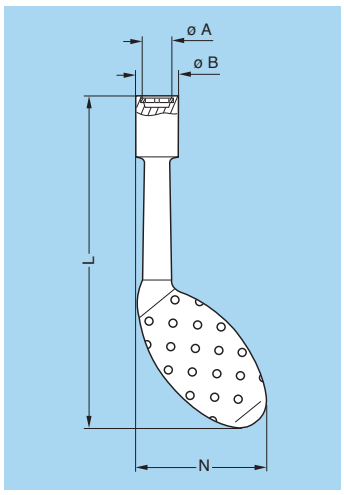

DCH Spanners for notched nuts

Part number	Series	Dimensions (mm)				Part number of the nut (p. 95)
		A	B	L	N	
DCH.91.101.PA	00	10.1	12.8	124	48.3	GEG.00.240.LC
DCH.91.121.PA	0B	12.1	14.8	124	49.3	GEG.0S.240.LC
DCH.91.181.PA	0K	18.1	22.8	129	53.1	GEG.0E.240.LC
DCH.91.201.PA	2B	20.1	22.8	129	53.5	GEG.2S.240.LC
DCH.91.251.PA	2K	25.1	32.8	134	55.5	GEG.2E.240.LC

- Material: Blue polyurethane



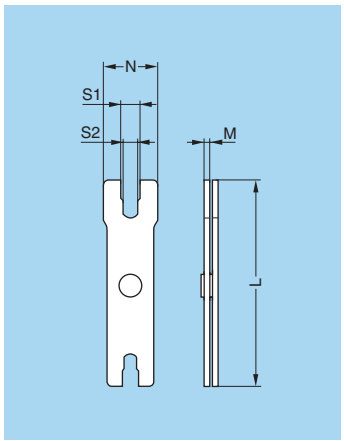

DCP Spanners for tightening collet nut

Part number	Series	Dimensions (mm)				
		L	M	N	S1	S2
DCP.91.001.TN	0B	95	2.5	21	8.1	7.1
DCP.91.023.TN	2B-2K	115	3.0	30	13.1	12.1
	3B-3K	115	3.0	35	15.1	14.1
DCP.91.045.TN	4B	130	3.0	44	21.1	20.1
	5B	130	3.0	54	31.1	30.1

- Material: Blackened steel



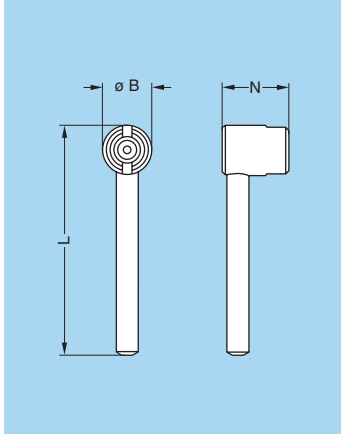

DCL Spanners for securing straight plug with two latching tabs while tightening collet nut

Part number	Series	Dimensions (mm)		
		B	L	N
DCL.91.105.0TK	00	10	45	13.5

- Material: Blackened steel

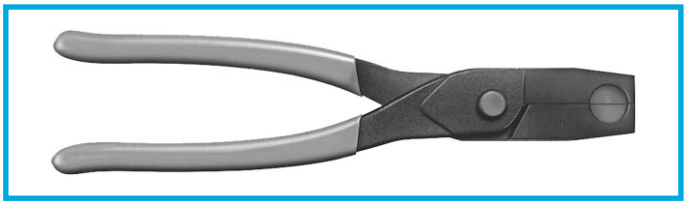

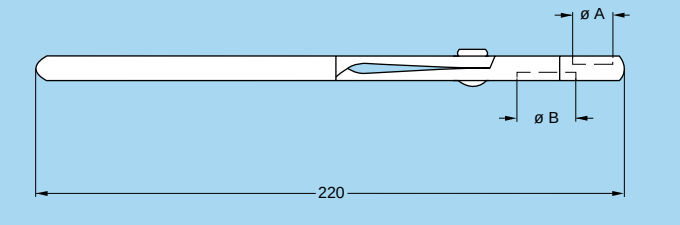

DPF Pliers for assembling plugs (series K)

Part number	Series	Dimensions (mm)	
		A	B
DPF.91.001.TA	0K	10	–
DPF.91.023.TA	2K	15	–
	3K	–	18

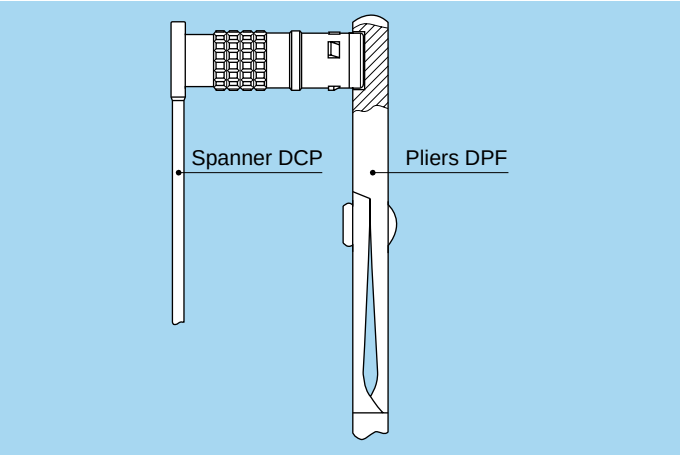

Example for use

The plug end must be held in the pliers while the nut is tightened with the spanner.

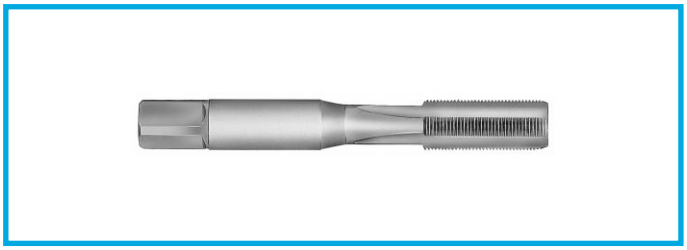

DTA Taps

Part number	Series	Thread
DTA.99.700.5Z	00	M7 x 0.5
DTA.99.900.6Z	0B	M9 x 0.6

Fig. 1

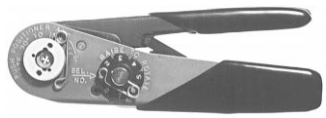

Fig. 2

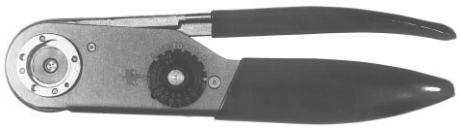

Manual crimping tools

Supplier	Part number	
	contact ø 0.7-0.9-1.3 (Fig. 1)	contact ø 1.6-2.0 (Fig. 2)
LEMO	DPC.91.701.V[1)]	DPC.91.101.A[2)]
DANIELS	MH860[1)]	AF8[2)]
BALMAR	23-000	55-000
BUCHANAN	616336[1)]	615708[2)]

[1)] According to specification MIL-C-22520/7-01.
[2)] According to specification MIL-C-22520/1-01.



male



female

These positioners are suitable for use with manual crimping tool according to the MIL-C-22520/7-01 standard.

DCE Positioners for crimp contacts ø 0.7, 0.9 and 1.3 mm

	Connector				Positioners part number	
	Type		ø Contact	Conductor AWG	For male contact	For female contact
	F1	F2				
2B 2K	96A	92A	0.9	20-22-24	DCE.91.092.BVC	DCE.91.092.BVM
	96C	92C	0.7	22-24-26	DCE.91.072.BVC	DCE.91.072.BVM
	96E	92E				
	96J	92J				
3B 3K	97C	93B	0.9	20-22-24	DCE.91.093.BVC	DCE.91.093.BVM
	97E	93E				
	–	87E				
	97J	93J	0.7	22-24-26	DCE.91.073.BVC	DCE.91.073.BVM
	97R	93R				
	96X	92X				
	–	87R				
4B 4K	–	95D	1.3	18-20	DCE.91.134.BVC	DCE.91.134.BVM
	–	93E	1.3[1)]	18-20	DCE.91.133.BVCY	DCE.91.133.BVM
			0.9	20-22-24	DCE.91.094.BVC	DCE.91.094.BVM
	97F	–	1.3	18-20	DCE.91.134.BVC	DCE.91.134.BVM
			0.9	20-22-24	DCE.91.094.BVC	DCE.91.094.BVM
	97R	93R	0.9	20-22-24	DCE.91.094.BVC	DCE.91.094.BVM
	97L	93L				
	98L	94L	0.7	22-24-26	DCE.91.074.BVC	DCE.91.074.BVM
	97T	93T				
	–	88E				
	99H	–				
	98E	94E				

Note: [1)] Arrangement with special contact length, special positioners are required.



These turrets are suitable for use with manual crimping tool according to the MIL-C-22520/1-01 standard.

Note: A wide variation of strand number and diameter combinations are quoted as being AWG, some of which do not have a large enough cross section to guarantee a crimp as per either MIL-C-22520/1 or /7-01. Our technical department is at your disposal to study and propose a solution to all your specific problems.

DCE Turrets for crimp contacts ø 1.6 and 2.0 mm

	Connector				Turret part number	
	Type		ø Contact	Conductor AWG	For male contact	For female contact
	F1	F2				
5B 5K	–	94B	2.0	12-14-16	DCE.91.205.BVCM	DCE.91.205.BVCM
	–	956	2.0[1)]	12-14-16	DCE.91.203.BVCM	DCE.91.204.BVCM
			1.6[1)]	14-16-18	DCE.91.164.BVCM	DCE.91.162.BVCM
	–	90C	1.6[1)]	14-16-18		

Note: [1)] Arrangement with special contact length, turret from another series are required.

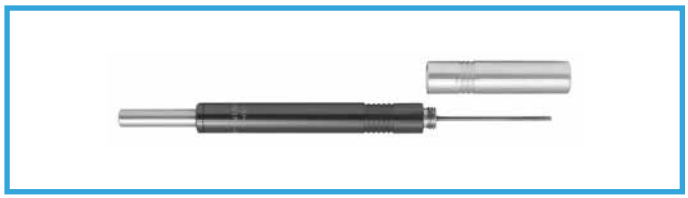

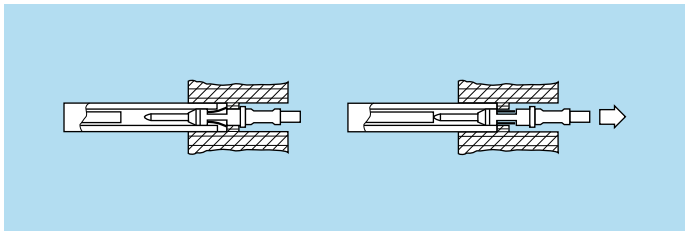

DCC Manual extractors for crimp contacts

	FO Contact Types F1	FO Contact Types F2	ø A Contact	Extractor part number
2B 2K	96A	92A	0.9	DCC.09.05B.LAG
	96C	92C	0.7	DCC.07.04B.LAG
	96E	92E		
	96J	92J		
3B 3K	97C	93B	0.9	DCC.09.05B.LAG
	97E	93E		
	–	87E		
	97J	93J	0.7	DCC.07.04B.LAG
	97R	93R		
	96X	92X		
	–	87R		
4B 4K	–	95D	1.3	DCC.13.15B.LAG
	–	93E	1.3	DCC.13.15B.LAG
			0.9	DCC.09.05B.LAG
	97F	–	1.3	DCC.13.15B.LAG
			0.9	DCC.09.05B.LAG
	97R	93R	0.9	DCC.09.05B.LAG
	97L	93L		
	98L	94L	0.7	DCC.07.04B.LAG
	97T	93T		
	–	88E		
	99H	–		
	98E	94E		
5B 5K	–	94B	2.0	DCC.20.25B.LAG
	–	956	2.0	DCC.20.25B.LAG
			1.6	DCC.16.25B.LAG
	–	90C	1.6	DCC.16.25B.LAG

Tools for type C Coaxial Contacts

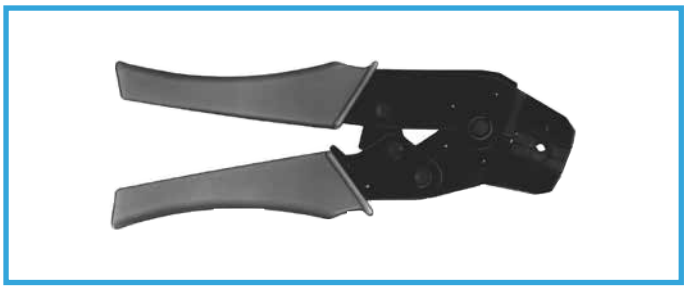

DPE Crimping tool with die

Part number	Cable group
DPE.99.103.1K	2
DPE.99.103.8K	1, 3

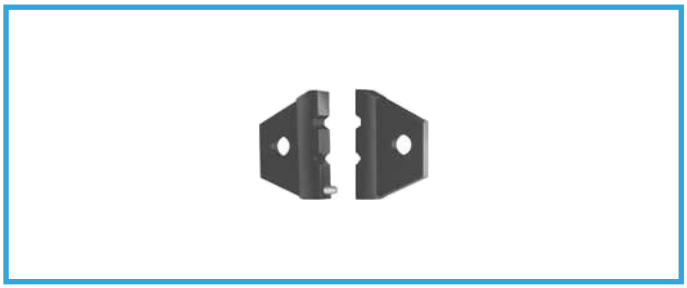

DPN Dies

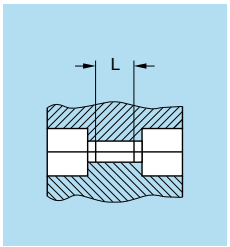

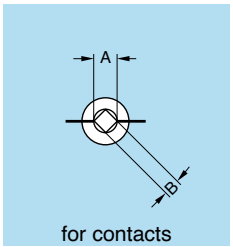

for contacts

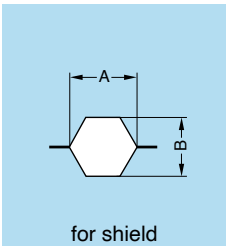

for shield

Part number	Cable group	Die dimensions				
		For contacts			For shield	
		A	B	L	A	B
DPN.99.103.1K	2	1.09	0.77	2.0	3.10	2.70
DPN.99.103.8K	1, 3	1.09	0.77	2.0	3.80	3.30

- Die material: Blackened steel

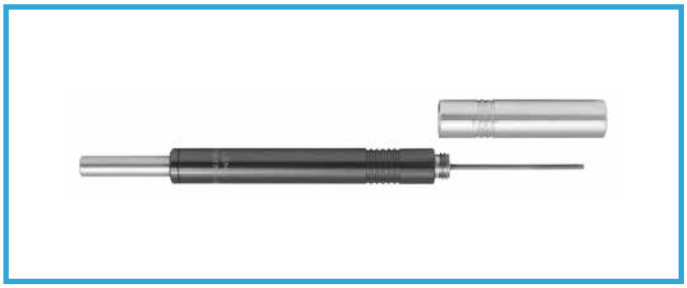

DCC Manual extractors

Part number	Cable group
DCC.91.CP1.LAG	1, 2, 3

Fibre Optic Tooling

We propose a complete range of tools for fibre optic connector cable assembly.
Some tools are specific to each fibre optic contact type. When selecting necessary tooling, make sure you identify correctly the contact type used in the selected product.



DRV Complete workstation for fibre optic contact

Description

Comprehensive range of tools for terminating both single-mode and multi-mode fibres. Includes specific tools for F2 and F4 fibre optic contacts. Detachable termination case lid for use as polishing platform during field termination.
Rugged but aesthetically pleasing termination case which is ideal for field use or in-house terminations. Curing oven and inspection microscope shall be ordered separately.

Part number	Contact type
DRV.91.CF2.PN	F2, F4

Workstation Contents

Part Number	Description	Quantity	Number
WST.BT.175.55PT	Plastic box	1	1
WST.BR.150.8AC	Tweezers	1	2
WST.CH.252.5SR	Lint-free Cloth	1	3
WST.CS.125.CE	Kevlar cutters	1	4
WST.CO.020.52	Cotton bud (sachet of 20 pcs)	1	5
WST.DS.290.PT	Alcohol dispenser (supplied empty)	1	6
DCC.91.F12.LAG	Extraction tool for F1 and F2 contacts	1	7
DCS.91.G20.0C	Microscope adapter for F2 and F4 cont.	1	8
WST.ME.354.8R	Epoxy mixer and pad	1	9
DOC.FO.CF2.0000	Terminating instructions for F2 contacts	1	10
WST.OU.135.10SZ	Fibre scribe	1	11
DCS.91.F24.LC	Polishing tool for F2 and F4 contacts	1	12
WST.OU.452.5MN	Large cable stripper	1	13
WST.PA.105.5525	Cleaning tissues	1	14
WST.PA.012.AOJ	Lapping film 12µm (yellow)	20	15
WST.PA.005.AOM	Lapping film 5µm (brown)	20	16
WST.PA.001.AOV	Lapping film 1µm (green)	20	17
WST.PN.210.AS	Armoured cable cutter	1	18
WST.PN.145.AR	Cable cutter	1	19
WST.PN.103.0PG	Outer jacket stripper	1	20
WST.PN.203.CR	Buffer coating stripping tool	1	21
WST.PN.102.3CR	Primary coat stripper	1	22
DPE.99.524.337K	Crimp tool	1	23
WST.PL.322.5PT	Polishing platform	1	24
WST.RE.353.EPO	Epoxy resin + safety instructions	10	25
WST.SE.305.8PH	Syringe with needle	10	26
WST.TU.191.LN	Fibre shield for F2 and F4 contacts	4	27
WST.RG.150.AZ	Steel rule 6”	1	28
WST.SY.135.PA	Fibre length marking pen	1	29
WST.CS.155.AZ	Scissors	1	30

Note: The interior of the case is fitted with pre-formed plastic foam to provide secure storage of the tools.

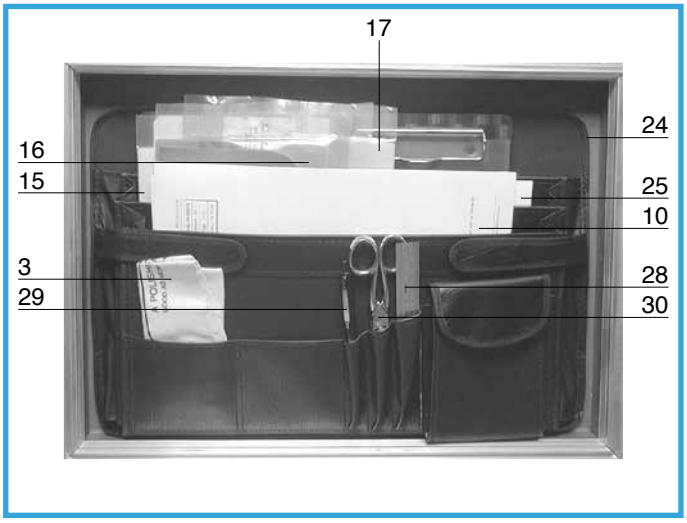

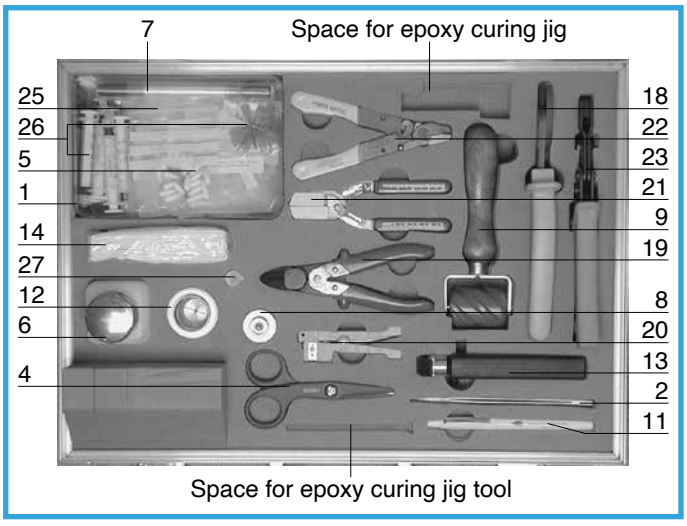



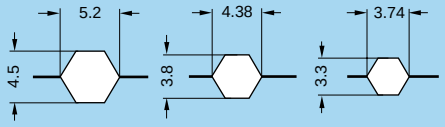

DPE Crimping tool for fibre optic contact

Description
Crimping tool for capturing KEVLAR® strand on contact body

Part number	Contact type
DPE.99.524.337K [1)]	F1, F2, F3, F4

Note: [1)] Included in the LEMO F2 workstation.

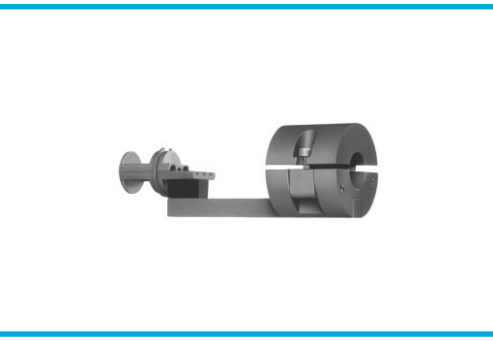

DCS Epoxy curing jig

Description
Curing positioning jig specifically designed to ease assembly of the 3K.93C series with associated camera cable

Part number	Contact type
DCS.91.F12.3LA	F2



WST Epoxy curing oven

Description
Oven for assisting in curing epoxy

Part number	Voltage	Contact type
WST.FR.220.VA	220 volts	F1, F2, F3, F4
WST.FR.110.VA	110 volts	



DCS Polishing tool for fibre optic contacts

Description
Precision spring loaded tool for polishing terminated fibre optic contacts.

Part number	Contact type
DCS.91.F13.LC	F1, F3
DCS.91.F24.LC [1)]	F2, F4

Note: [1)] Included in the LEMO F2 workstation.



WST Fibre Inspection Microscope

Description
Microscope to assist in viewing termination operations and verifying fibre end finish.
See adaptor below.

Part number	Contact type
WST.FB.G10.4N	F1, F2, F3, F4

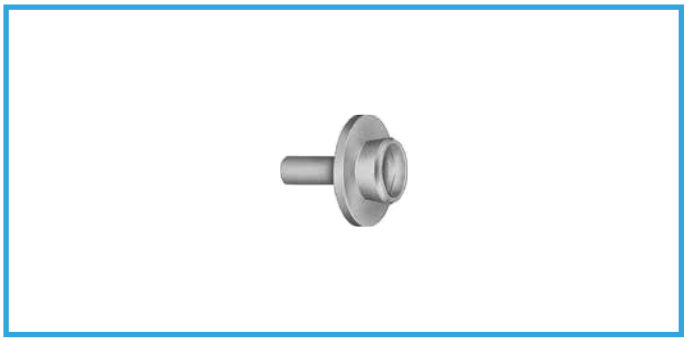

DCS Microscope adaptor for fibre optic contacts

Description
Adaptor for final inspection of fibre optic contacts.
To be used with microscope WST.FB.G10.4N

Part number	Contact type
DCS.91.G24.0C	F1, F3
DCS.91.G20.0C [1)]	F2, F4

Note: [1)] Included in the LEMO F2 workstation.

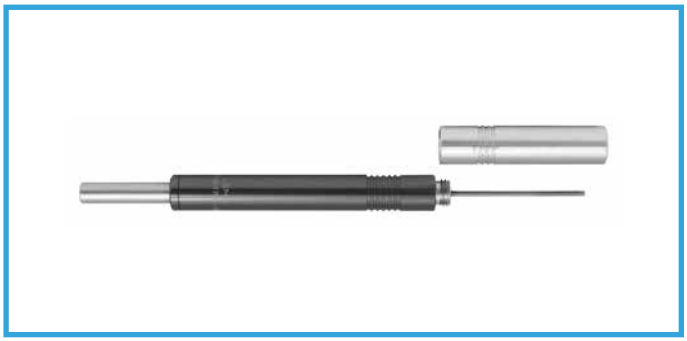

DCC Manual extractor for fibre optic contact

Description
Tool for extracting the F1 or F2 contact.

Part number	Contact type
DCC.91.F12.LAG	F1, F2

Note: [1)] Included in the LEMO F2 workstation.



DCS F2 contact alignment device installation/extraction tool

Description
Simple tool with two threaded end for installation/extraction of the F2 contact alignment device

Part number	Contact type
DCS.F2.035.PN	F2

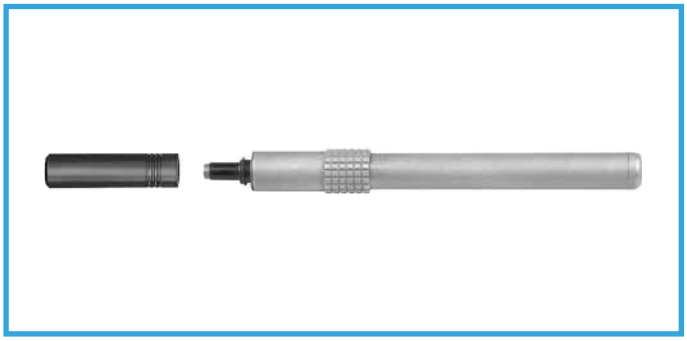

DCC F4 contact alignment device extraction tool

Description
This tool is for extraction/reinstallation of the F4 contact alignment device. It is necessary for contact cleaning only

Part number	Contact type
DCC.F4.125.7LA	F4

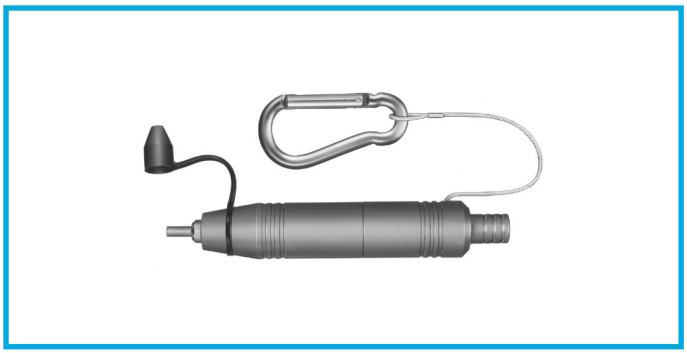

DCS Cleaning tool

Description
Used for maintenance cleaning. The tool is made with an alcohol spongy reservoir (supplied empty).
16 dry cotton buds are included.
The threaded end allows extraction/reinstallation of the F2 contact alignment device.

Part number	Contact type
DCS.91.F23.LA	F2



WST Cleaning kit

Description
Kit that includes 2 cotton buds one of them moistened with alcohol

Part number	Contact type
WST.KI.125.34	F1, F2, F3, F4

Technical characteristics

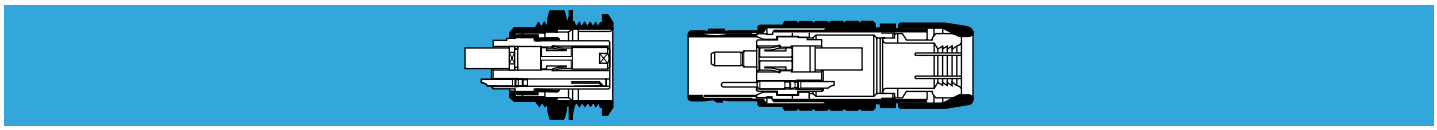

Outer shell

Brass

In most cases, LEMO connectors have a brass outer shell which is suitable for most general purpose applications, including civilian and military. The brass outer shells have a chrome nickel-plated surface which ensures very good protection against industrial atmosphere, salt air and most corrosive agents.

Alternative protective coatings are available to satisfy other specific environmental conditions:
– electrolytic nickel
– nickel-black chrome. After the black chrome treatment, the part is coated with a protective organic film.

Stainless steel

For applications where there are severe environmental conditions that may rapidly damage the surface finish, we recommend using stainless steel. The AISI 303 stainless steel is a material for general use adapted to most applications requiring a product made entirely of stainless metal.

For the broadcasting industry the heavy duty line with shell in stainless steel offers more resistance to heavy wear conditions.

Aluminium alloy

The aluminium alloy outer shells find numerous applications where light weight is a predominant factor, such as in the aeronautics and space industries, and for portable and mobile equipment.
These materials have high mechanical strength and excellent resistance to corrosion.

The shell surface is protected by anodizing which is available in six colours: blue, yellow, black, red, green, and natural.

Depending on the application, other surface finish is also available (electrolytic nickel-plating, black nickel plating).

Plastic materials

Some connector model shells of the 2B-4B series can be made of plastic. This solution offers optimum electrical insulating properties particularly suitable for medical applications.
Grey or white polysulfone (PSU) and beige PEEK offer excellent mechanical properties and is suitable for gas or vapour sterilization.
Some models are also available with an outer shell of cream-coloured polyphenylsulfone (PPSU). We recommend this material particularly for applications where products are to withstand hundreds of vapour sterilization cycles.

Other metallic components

In general, most metallic components are manufactured in brass. However, bronze or beryllium copper are used where good elasticity is required (for example: grounding crown). Depending on the application, these parts have electrolytic nickel or nickel-gold plating. These parts can also be manufactured in stainless steel (AISI 416).

Gasket and O-rings

In general, gaskets and O-rings are made of silicone rubber MQ/MVQ. However, for some products they are made of fluorosilicone rubber (FPM).

Technical characteristics of plastic materials

Type	Norme	Units	PEEK	PSU	PPSU	Silicone	FPM
Density	ASTM D 792	–	1.3-1.4	1.24	1.3	~1.2	~1.9
Tensile strength (at 23°C)	ASTM D 638/ ISO R527	MPa	92-142	70	70	> 9	> 12
Flexurale strength (at 23°C)	ASTM D 790/ ISO R178	MPA	170	106	91	–	–
Dielectric strength	ASTM D 149/IEC 60243	kV/mm	19-25	17-20	15	18-30	–
Volume resis. at 50% HR and 23°C	ASTM D 257/IEC 60093	Ω • cm	10^{16}	$5x10^{16}$	-	10^{14}	-
Surface resistivity	ASTM D 257	Ω	10^{15}	–	–	–	–
Thermal conductivity	ASTM C 177	W/K • m	0.25	0.26	–	–	–
Comparative tracking index	IEC 60112	V	CTI 150	CTI 150	–	–	–
Maxi. continuous service temperature	UL 746	°C	250	140	180	200	200
Min. continuous service temperature	UL 746	°C	-55	-60	-50	-50	-20
Max. short-time service temperature	–	°C	300	160	200	> 250	300
Water absorption in 24h at 23°C	ASTM D 570/ISO R62A	%	0.12	0.3	0.37	–	–
Radiation resistance	–	Gy[1)]	10^7	10^5	-	10^5	$8x10^4$
Flammability rating	ASTM D 635/UL 94	–	V-0/1.5	V-0/4.4	V-0/1.6	–	–
Resistance to steam sterilization	–	–	excel.	good	excel.	good	good

ASTM = American Society for Testing & Materials
ISO = International Standards Organization
UL = Underwriters Laboratories
IEC = International Electrotechnical Commission

Note: [1)] 1 Gy (Gray) = 100 rad

Materials and Treatments

Component	Material (Standard)	Surface treatment (µm)							Notes
		chrome			nickel		black chr.		
		Cu	Ni	Cr	Cu	Ni	Ni	Cr	
Outer shell, collet nut, conical nut or notched nut	Brass (UNS C 38500)	0.5	3	0.3	0.5	3	1	2	
	Stainless steel (AISI 303 or 304)	without treatment							
	Aluminium alloy (AA 6262A or AA 6023)	anodized							
	PEEK, Polyether EtherKetone, beige	–							1)
	PSU (Udel®), Polysulfone, grey or white	–							2)
	PPSU (Radel®), Polyphenylsulfone, cream	–							2)
Grounding crown	Bronze (UNS C 54400) or special brass	–	–	–	0.5	3	–	–	
	Stainless steel (AISI 416)	without treatment							3)
Latch sleeve	Special brass	0.5	3	0.3	0.5	3	–	–	
	Stainless steel (AISI 416)	without treatment							3)
Locking washer	Bronze (UNS C 52100)	–	–	–	0.5	3	–	–	
Hexagonal or round nut	Brass (UNS C 38500)								
	Stainless steel (AISI 303 or 304)	without treatment							4)
	Aluminium alloy (AA 6262A or AA 6023)	anodized natural							4)
Other metallic components	Brass (UNS C 38500)	–	–	–	0.5	3	–	–	
	Stainless steel (AISI 303 or 304)	without treatment							
O-ring and gaskets	Silicone MQ/MVQ or FPM/FKM (Viton®)	–							

Notes:
standards for surface treatment are as follows:
Chrome-plated: SAE AMS 2460;
Nickel-plated: SAE AMS QQ N 290, or MIL DTL 32119;
Gold-plated: ISO 27874; and
Black chrome: MIL DTL 14538 with a minimum of 10 µm of lacquer protection.

1) for FGG and ENG models of the 3B and 4B series
2) for the FGY and ENY models of the 2B, 3B and 4B series
3) AISI 416 steel is used with shells made of AISI 303 or 304
4) delivered with free and fixed sockets with aluminium alloy or stainless steel shell

Shell electrical continuity:
(measured according to IEC 60512-2 test 2f)

– Test current: 1A

	Series							
	2B	3B	4B	5B	2K	3K	4K	5K
R (mΩ)	2.2	2.2	1.5	1.5	1.8	1.6	1.4	1.4

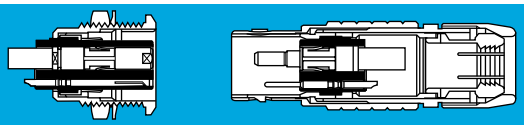

Insulator

LEMO uses PEEK (Polyether Etherketone) for the insulator material. The performance of this thermoplastic material is enhanced by the addition of glass fibres in the resin to achieve very high mechanical strength, to increase dielectric strength and to reduce water absorption rate. The above features of PEEK plus its excellent radiation resistance makes it ideal for most applications.
(See technical characteristics on page 107)

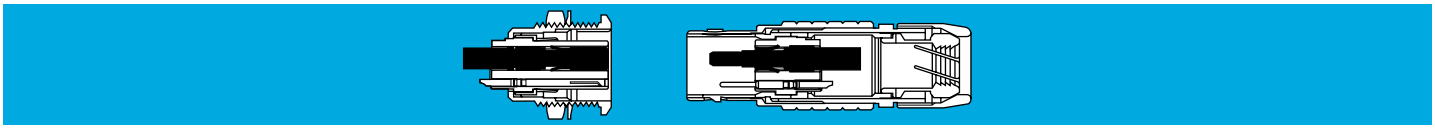

Fibre Optic Contacts

In order to ensure the highest technical performance and to provide the optimal solution for a diversity of applications, LEMO has developed the 4 types of fibre optic contacts designated F1, F2, F3, and F4.
F2 and F4 contacts are designed with fully floating pre-domed ceramic ferrule. Such contacts are mainly designed to operate with single-mode and multi-mode fibres with small core dimensions.
F1 and F3 contacts are using floating metallic or ceramic ferrules. They are ideal for use with multi-mode, silica or plastic fibres with large core diameters.

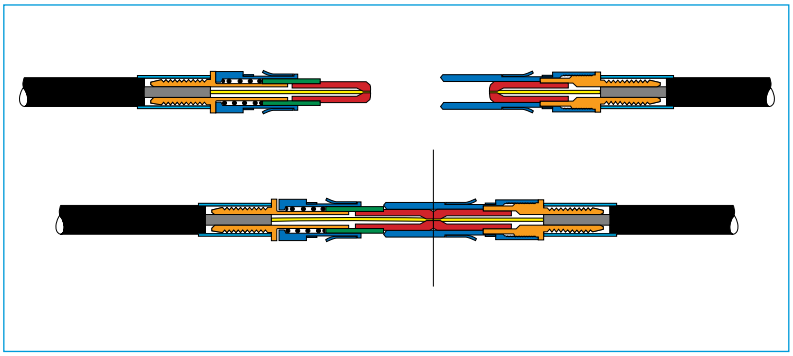

Contact F1

- Contact body: part ensuring the alignment of the two ferrules and retention of the contact into the insulator, made of rust-proof alloy. Clips is made of Cu-Be
- Crimp holder: provided for cable fixing, made of rustproof alloy
- Ferrule made of rustproof alloy or ceramic depending on the fibre diameter
- Ferrule holder made of rustproof alloy
- Stainless steel spring to guarantee mating precision of the two ferrules lengthwise
- Crimp ferrule made of Nickel-plated copper for fixing the cable onto the crimp holder
- Fibre
- Buffer
- Cable

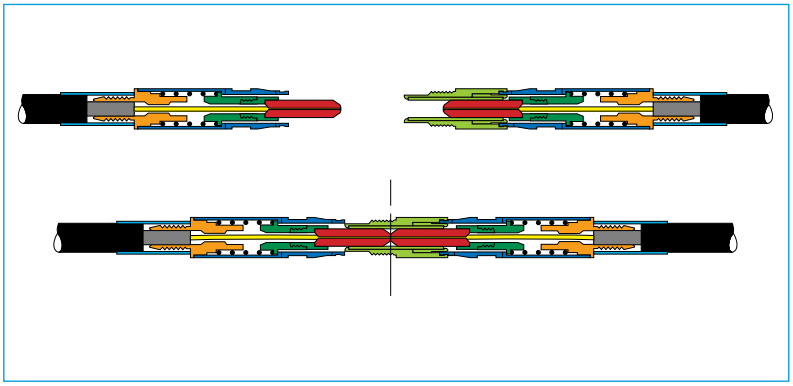

Contact F2

- Contact body: part ensuring the retention of the contact into the insulator, made of PEEK
- Crimp holder: provided for cable fixing, made of Nickel-plated brass
- Ferrule made of ceramic
- Ferrule holder made of rustproof alloy
- Stainless steel spring to guarantee physical contact of the two ferrules with correct pressure
- Crimp ferrule made of Nickel-plated copper for fixing the cable onto the crimp holder
- Alignment tube to guarantee the alignment of the two ferrules when mated, made of ceramic and rustproof alloy
- Fibre
- Buffer
- Cable

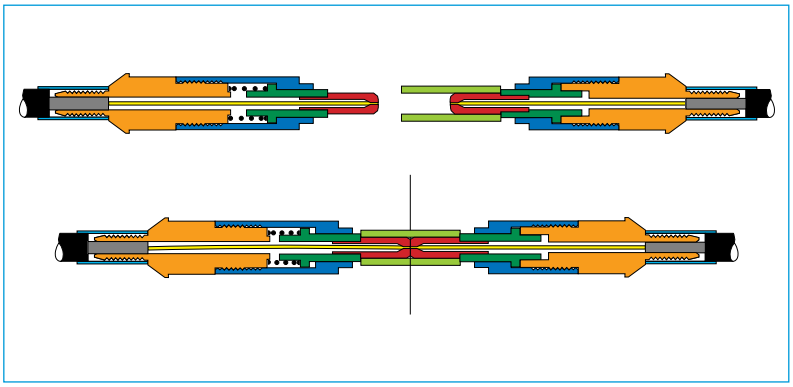

Contact F3

- Contact body: part ensuring the alignment of the contact into connector shell, made of Nickel-plated brass
- Crimp holder: provided for cable fixing, made of Nickel-plated brass
- Ferrule made of rustproof alloy or ceramic depending on the fibre diameter
- Ferrule holder made of rustproof alloy
- Stainless steel spring to guarantee mating precision of the two ferrules lengthwise
- Crimp ferrule made of Nickel-plated copper for fixing the cable onto the crimp holder
- Alignment tube to guarantee the alignment of the two ferrules when mated, made of rustproof alloy
- Fibre
- Buffer
- Cable

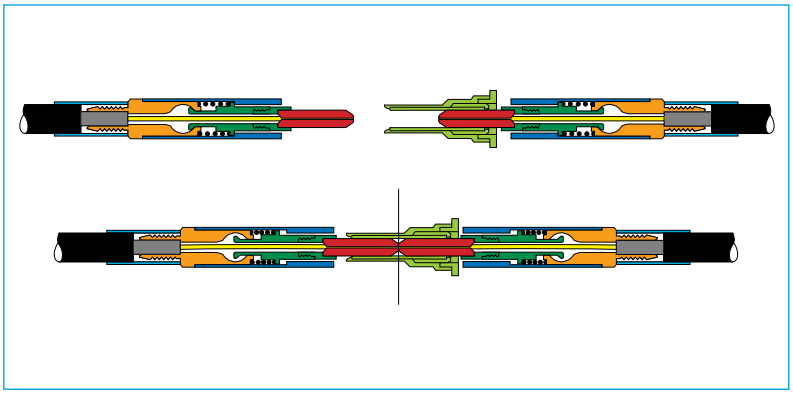

Contact F4

- Contact body: part ensuring the alignment of the contact into connector shell, made of rustproof alloy
- Crimp holder: provided for cable fixing made of Nickel-plated brass
- Ferrule made of ceramic
- Ferrule holder made of rustproof alloy
- Stainless steel spring to guarantee physical contact of the two ferrules with correct pressure
- Crimp ferrule made of Nickel-plated copper for fixing the cable onto the crimp holder
- Alignment tube to guarantee the alignment of the two ferrules when mated (always fitted into the fixed or free socket) made of ceramic and rustproof alloy
- Fibre
- Buffer
- Cable

Optical Performance for F1, F2, F3, and F4 Type Contacts

The optical performance for the fibre optic contacts relates to the insertion and return losses measured at the junction of the fibre to fibre interface. These losses are caused mainly by minute geometrical effects of the critical alignment components and deviations in the fibre core and cladding dimensions.

The insertion loss results for multi-mode and single-mode fibres are given whereas the return loss values are provided for single-mode fibres only.

Insertion and return losses are expressed in decibels (dB). The data shown in the diagrams below correspond to numerous matings using various batches of optical fibres and connectors.

Measurements with Single-mode Fibre for F2 and F4 Contacts.

Insertion loss



Mean = 0.10 dB
Tested at 1300 nm
Tested according to the standard IEC 61300-03-04, Insertion Method B.
Fibre = 9/125 µm
Ferrule bore diameter = 125 µm

Return loss

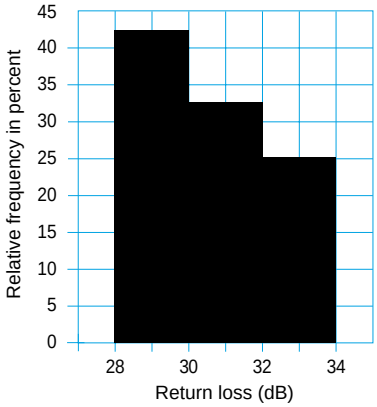

Mean = 30.42 dB
Tested at 1300 nm
Tested according to the standard IEC 61300-03-06, Branching Device Method
Fibre = 9/125 µm, Hand Polishing

Note: It is possible to obtain return losses better than 45 dB with UPC polishing techniques.
Please consult LEMO for more detailed information.

Measurements with Multi-mode Fibre for F2 and F4 Contacts

Insertion loss

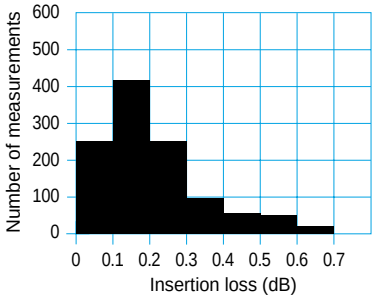

Mean = 0.25 dB
Tested at 1300 nm
Tested according to the standard IEC 61300-03-04, Insertion Method B.
Fibre = 50/125 µm
Ferrule bore diameter = 126 µm

Measurements with Multi-mode Fibre for F1 and F3 Contacts

Insertion loss

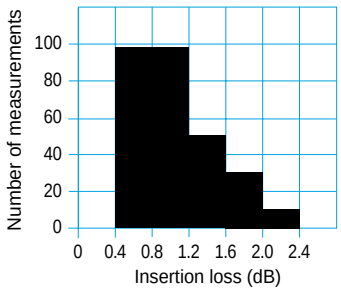

Mean = 1.13 dB
Tested at 850 nm
Tested according to the standard IEC 61300-03-04, Insertion Method B.
Fibre = 200/230 µm
Ferrule bore diameter = 235 µm

Change in attenuation vs. environmental and mechanical conditions

Characteristic	Value	Standard	Change in attenuation [1]	
			F2-F4 Contacts	F1-F3 Contacts
High temperature	+ 80°C	IEC 61300-02-18	< 0.20 dB	< 0.20 dB
Low temperature	- 40°C	IEC 61300-02-17	< 0.20 dB	< 0.20 dB
Change of temperature (7 cycles)	Diagram 1 below	IEC 61300-02-22	< 0.20 dB	< 0.20 dB
Damp heat steady state	Up to 95 % RH, 60°C	IEC 61300-02-19	< 0.20 dB	< 0.15 dB
Mating cycles (contact F1; F2; F3)	1000	IEC 61300-02-02	< 0.15 dB	< 0.15 dB
Mating cycles (contact F4)	500	IEC 61300-02-02	< 0.15 dB	–
Cable retention [2]	100 N	IEC 61300-02-04	< 0.10 dB	–
Impact (Method A)	1 m onto concrete floor	IEC 61300-02-12	< 0.10 dB	< 0.15 dB
Shock (3 cycles in 2 directions)	100 g, 10-50 ms; 20 g, 6-9 ms	IEC 61300-02-09	< 0.10 dB	< 0.20 dB
Vibration (7 cycles)	Diagram 2 below	IEC 61300-02-01	< 0.20 dB	< 0.25 dB

Note:
[1] The insertion loss variations were measured during the entire environmental and mechanical tests respectively.
[2] Value quoted is for 2.5 mm tight jacket cable. In practice the cable retention depends on many factors including the cable construction.

Diagram 1: Temperature cycles

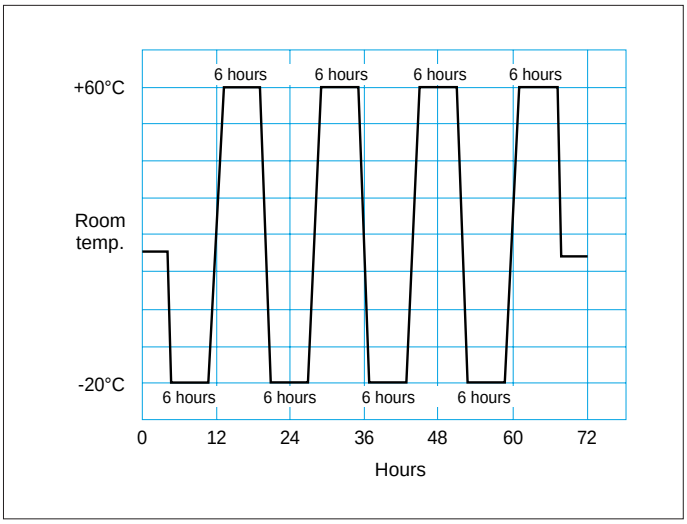

Diagram 2: Vibration

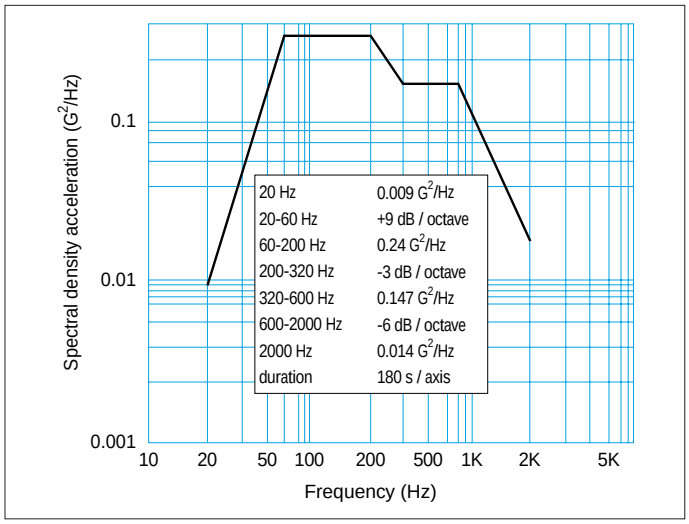

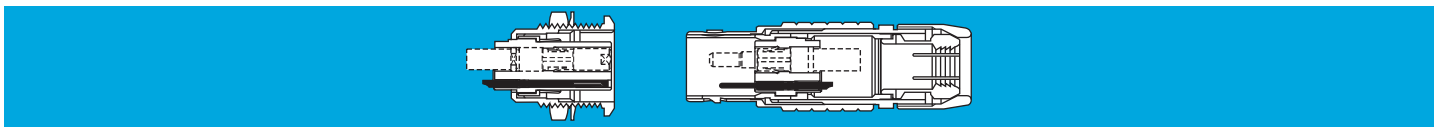

Electrical Contact

Technical description

The secure reliable electromechanical connection achieved with LEMO female cylindrical contacts is mainly due to two important design features:

1. *Prod proof entry* on the mating side which ensures perfect concentric mating even with carelessly handled connectors; and
2. *The pressure spring*, with good elasticity, maintains a constant even force on the male contact when mated. The leading edge of the pressure spring preserves the surface treatment (gold-plated) and prevents undue wear.

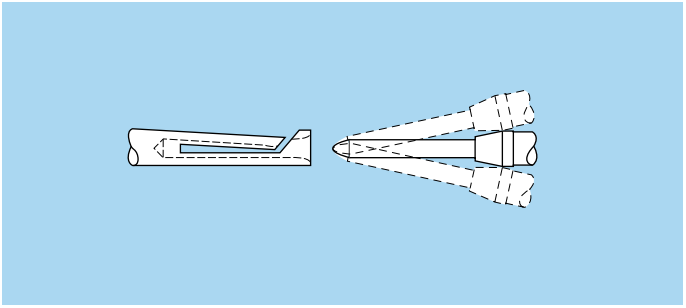

Contact material and treatment

LEMO female contacts are made of bronze (UNS C 54400). This material is chosen because of its high modulus of elasticity, its excellent electrical conductivity and a high mechanical strength.

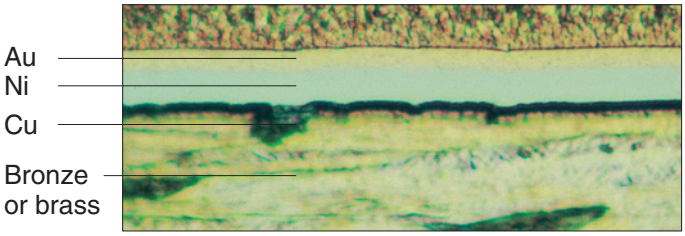

LEMO male solder contacts are made of brass (UNS C 38500). Male crimp contacts are made of brass (UNS C 34500) or annealed brass (UNS C 38500) with optimum hardness (HV) for crimping onto the wire.

Type	Material (standard)	Surf. treatment (µm)		
		Cu	Ni	Au[1)]
Male crimp	Brass (UNS C 34500)	0.5	3	1.0
	Brass (UNS C 38500)			
Male solder	Brass (UNS C 38500)			
Female crimp	Bronze (UNS C 54400)	0.5	3	1.5
Female solder				
Clips	Cu-Be (FS QQ-C-530)	–	–	–
	Stainless steel			

Notes: The standard surface treatment are as follows:
Nickel: FS QQ-N-290A or MIL DTL 32119; and Gold: ISO 27874.
[1)] Minimum value.

Thickness comparison between the outside and the inside of female contacts

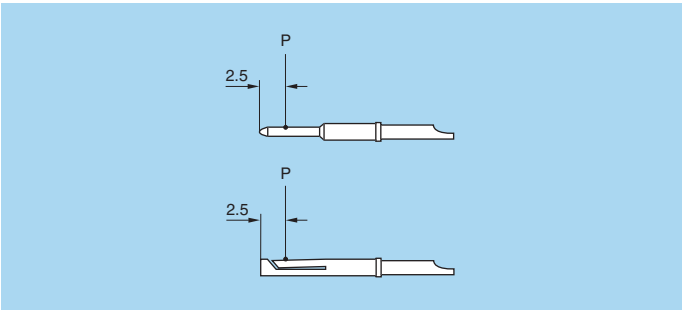

Contact ø A (mm)	Gold thickness		
	male (µm)	female	
		outside (µm)	inside (%)
0.7	1.0	1.5	70
0.9	1.0	1.5	75
1.3	1.0	1.5	75
1.6	1.0	1.5	75
2.0	1.0	1.5	75
4.0	1.0	1.5	75

Note: P = inspection point

Contact resistance with relation to the number of mating cyles

(measured according to IEC 60512-2 test 2a)

Maximum values measured after the mating cycles and the salt spray test according to IEC 60512-6 test 11f.

ø A (mm)	Contact resistance (mΩ)		
	1000 cycles	3000 cycles	5000 cycles
0.7	5.6	5.7	6.1
0.9	4.1	4.2	4.8
1.3	2.8	2.9	3.6

ø A (mm)	Contact resistance (mΩ)		
	1000 cycles	3000 cycles	5000 cycles
1.6	2.6	2.7	3.5
2.0	2.9	3.1	3.3
4.0	1.6	2.0	2.8

Insulation resistance between the contacts and contact/shell

(measured according to IEC 60512-2 test 3a)

Insulating material	PEEK
new	> 10^{12} Ω
after humidity test[1)]	> 10^{10} Ω

Note: [1)] 21 days at 95% RH according to IEC 60068-2-3.

Solder contacts

The conductor bucket of these contacts is machined at an angle to form a cup into which the solder can flow.

See page 9 for the range of cable dimensions that can be soldered.

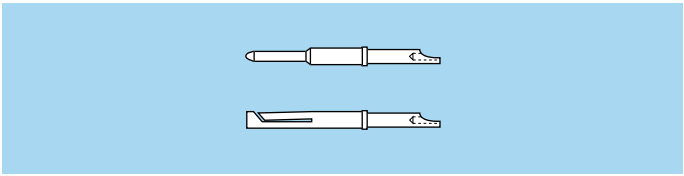

Crimp contacts

For multipole or hybrid connectors the standard four-identer crimp method is used (MIL-C-22520F, class I, type 1).
The crimp method requires a controlled compression to obtain a symmetrical deformation of the conductor strand and of the contact material. The radial hole in the side of the contact makes it possible to check whether the conductor is correctly positioned within the contact. A good crimping is characterized by only slightly reduced conductor section and practically no gap.

For optimum crimping, the bronze or brass contacts are annealed to relieve internal stress and reduce material hardening during the crimping process.
Only the crimping zone is annealed with the help of an induction heating machine designed by the LEMO Research and Development Department.

Advantages of crimping

- practical, quick contact fixing outside the insulator
- possible use at high temperature
- no risk of heating the insulator during the conductor-contact fixing
- high tensile strength

Crimp contacts are available in standard version for mounting maximum size conductors.

For some dimensions, these crimp contacts can be produced with reduced crimp barrels for mounting reduced size conductors. Consult the factory for information.

The range of cable dimensions that can be crimped into the contacts is indicated on the table on page 9.

Coaxial contacts type C

The cable fixing is achieved with hexagonal crimping (MIL-C-22520F, type 2). This method guarantees a good electrical continuity of the shield which improves greatly the shielding efficiency of the cable/connector link. The back end of the crimp nut which receives the shield braid, is milled to ensure a good retention of the shield once crimped.

For the center contact, square form crimp method is used (MIL-C-22520F, type 2). The method requires a controlled compression to obtain a symmetrical deformation of the conductor strand and of the contact material.

The radial hole in the side of the contact enables correct positioning of the conductor within the contact to be verified. A good crimping is characterized by a small conductor section reduction and by the quite closed free spaces.

The LEMO crimp contacts are factory annealed to relieve internal stresses, and reduce the risk of the material work hardening during the crimping process.

Technical characteristics

Characteristics	Unit	Value
Impedance	Ω	50
Operating voltage at 50 Hz [1)]	kV rms	0.5
Test voltage at 50 Hz	kV rms	1.6
Rated current	A	2
Insulation resistance	Ω	$>10^{12}$
Contact resistance	mΩ	5.8
Shell to shell resistance	mΩ	3.7
VSWR (f=GHz)		1.04 + 0.1f
Max. working frequency	GHz	2.1

Standing wave ratio

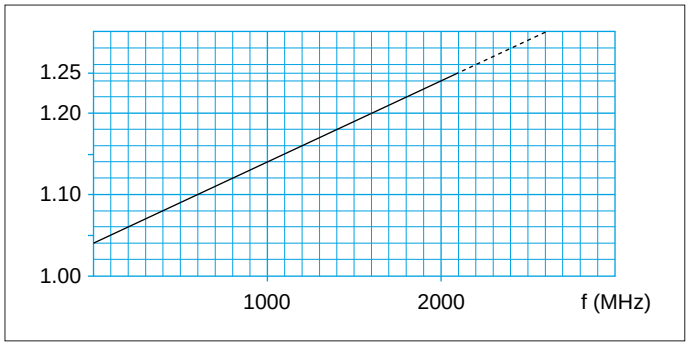

The range of coaxial cables that can be crimped into the contacts is indicated on the table on page 9.

Test voltage

Test voltage (Ue) :
(measured according to the IEC 60512-2 test 4a standard)

It corresponds to 75% of the mean breakdown voltage.
Test voltage is applied at 500 V/s and the test duration is 1 minute.

This test has been carried out with a mated plug and socket, with power supply only on the plug end.

The operating voltage value definition is at the entire responsibility of the customer who defines this value according to the safety factors that they apply to their equipment and system.

Caution:
For a number of applications, safety requirements for electrical appliances are more severe with regard to operating voltage. In such cases operating voltage is defined according to creepage distance and air clearance) between live parts. Please consult us for the choice of a connector by indi-cating the safety standard to be met by the product.

Voltage values are given in the table on insulator types for each series. They correspond with values measured at sea level. They are adapted to all applications up to an altitude of 2000 m.

In case a device is used at a higher altitude, air clearance between live parts has to be multiplied by the following coefficients.

It means also that test voltage has to be divided by this coefficient.

altitude (m)	coefficient
2000	1.00
3000	1.14
4000	1.29
5000	1.48

Rated current

(measured according to IEC 60512-3 test 5a)

The specified rated current can be applied simultaneously to all the contacts.
It corresponds with an average temperature rise of 40°C of the connector.

The current values are indicated in the table of insulator types in each series.
For use at higher temperatures acceptable rated current will be lower. It tends towards zero as the material is used at the maximum operating temperature accepted for the insulator.

In most case the current depend on the conductor dimension or on the printed circuit dimension.

Caution:
In general, connectors should not be unmated while live.

For connectors with PEEK insulator, maximum admissible current will follow the curve below depending on the operating temperature T.

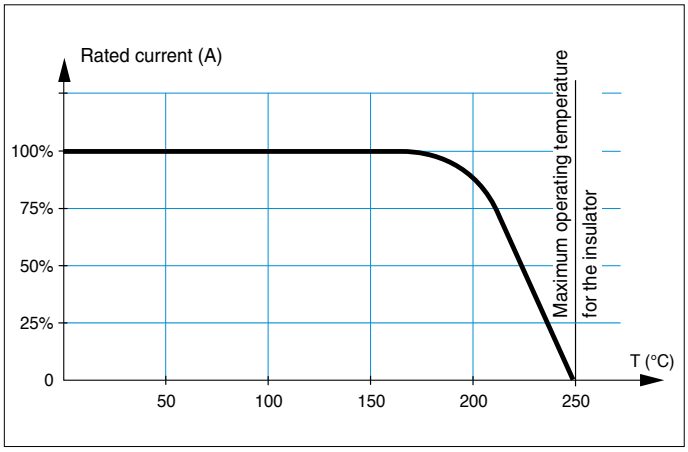



Cable fixing

Cable fixing onto LEMO connectors is determined by the cable characteristics and the connector model. This is achieved either with a cable collet system, by epoxy into a cable adapter or by hexagonal crimping (MIL-C-22520F).

Material and Treatment

Component	Material (Standard)	Surface Treatment (µm)	
		Cu	Ni
Center piece	Brass (UNS C 38500)	0.5	3
Collet	Brass (UNS C 38500)	0.5	3
Crimp ferrule or ring	Copper (UNS C 18700)	0.5	3
Reducer	Brass (UNS C 38500)	0.5	3
Reducing cone	Brass (UNS C 38500)	0.5	3
Earthing cone	Brass (UNS C 38500)	0.5	3
Metal washer	Brass (UNS C 38500)	0.5	3
Cable adapter	Brass (UNS C 38500)	0.5	3
Support tube	Stainless steel (AISI 304)	–	
Anchor	Stainless steel (AISI 303)	–	
Earthing body	Brass (UNS C 38500)	0.5	3
Gasket or o-ring	Silicone MQ/MVQ	–	
	FPM (Viton®)		

Notes:
Standards for surface treatment are as follows: Nickel-plated: FS QQ-N-290A.

Cable fixing for 00 and 0B series

In this series of single fibre connectors the fibre optic cables are held onto the contacts using the hexagonal crimping technique. The cable strength member (aramid yarn) is retained between the knurled section of the contact ④ and the crimp ferrule ②. The support tube ⑤ is used to protect the delicate optical fibre from the crimping load. Buffer coated fibres are retained into the fibre optic contact using an epoxy technique (Type T).
The fibre optic contact is retained into the connector with the collet nut ①.

00 Series
Type E fixing (crimp)

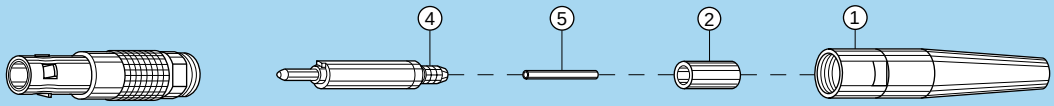

00 Series
Type T fixing (epoxy)

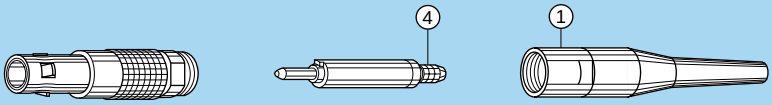

0B Series
Type E fixing (crimp)

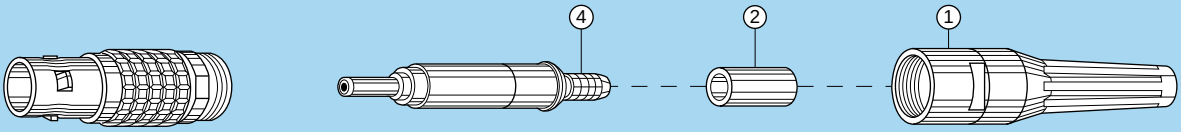

Cable fixing for 0K series

In this series of single fibre the fibre optic cable is held onto the contact using the hexagonal crimping technique. The cable strength member (aramid yarn) is retained between the knurled section of the contact ④ and the crimp ferrule ②. Then the contact is inserted into the adapter ⑤ and is retained because of its special shape. The adapter with its fibre optic contact is retained into the connector with the collet nut ①.

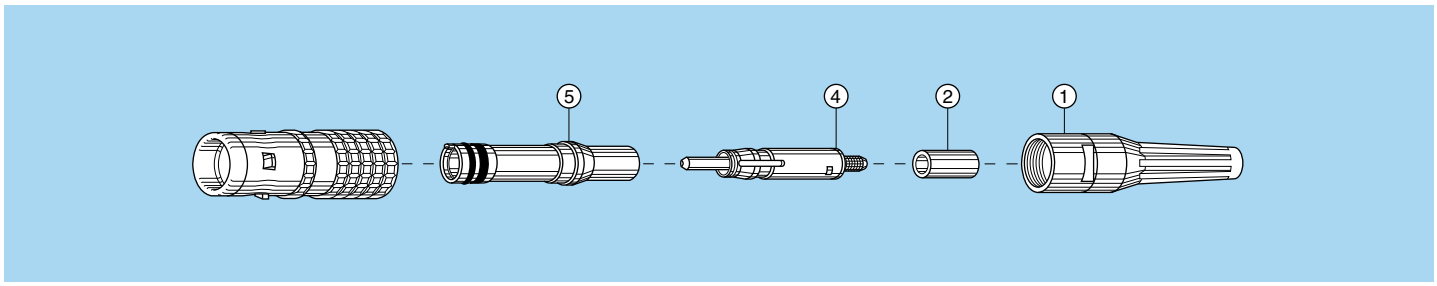

Cable clamping for 2B-3B-4B and 5B series

Type D cable clamping

This is the standard cable clamping for 2B, 3B, 4B, and 5B series. Two split insert carriers ④ position the insulator into the connector and a collet ② which is compressed by the collet nut ① ensures a good grip onto the cable. When assembling the connector, the cable shield is clamped between the split insert carrier and the collet.

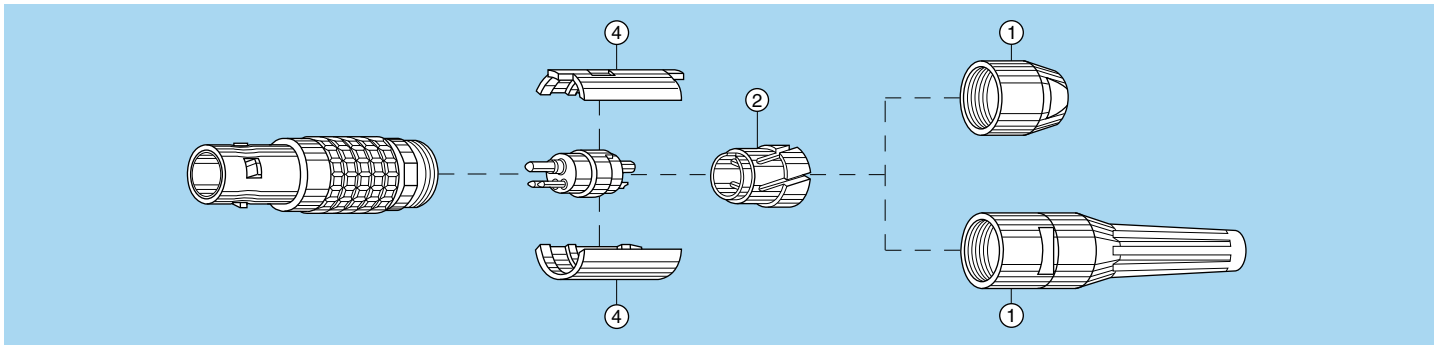

Type M cable clamping

This clamping system is adapted to cables with a diameter smaller than the smallest diameter specified for each series. It includes a reducer ⑫, a collet of a smaller series ② and a reducing cone ⑪.
These parts have the same function as the D type collet.

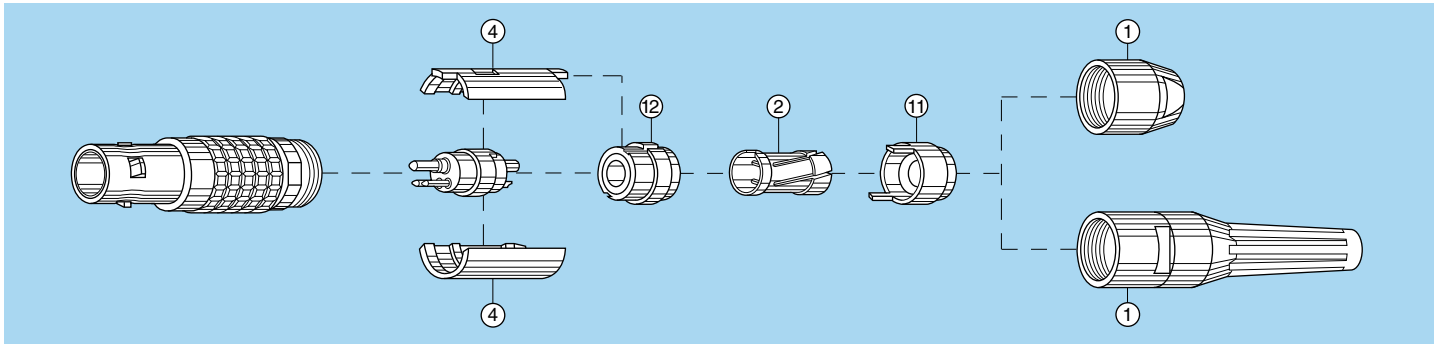

Cable fixing for 2K-3K-4K and 5K series

Type T clamping

In the watertight series the clamping system is made of a cable adapter ② which is fixed on the cable by epoxy. This solution offers superior captivation of the cable strength member (aramid yarn) and is fully watertight. The adapter is completed by a sealing o-ring ③. The insulator is positioned into the cable adapter and is correctly oriented by the split insert carrier ④. The system is retained into the connector by the collet nut with its bend relief.
For some specific cables (3K.93C series) an anchor ⑥ is installed to allow retention of the cable center steel strength member. For screened cable, the shield can be soldered to the cable adapter front section.

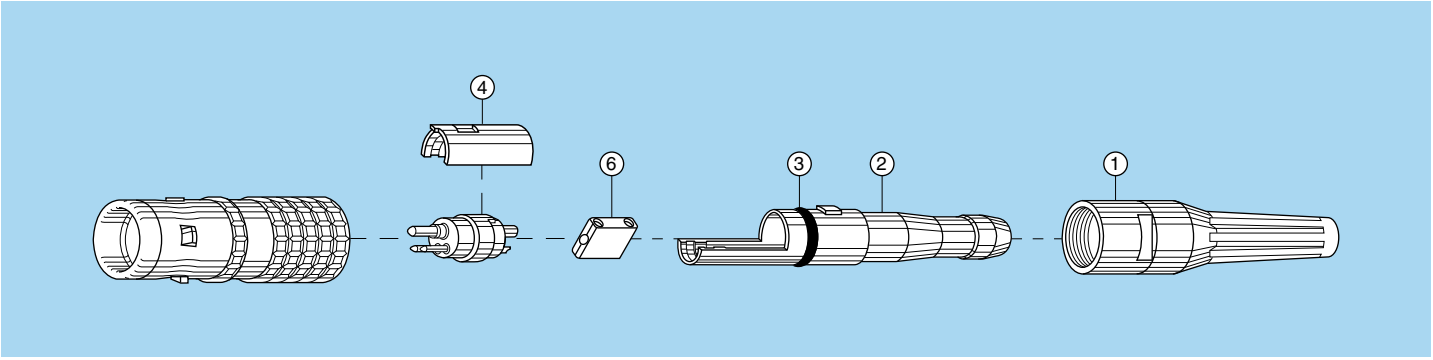

Cable clamping for the model FUW and PUW of the 3K.93C series

Type C clamping

For these 2 models the clamping is made of a collet ② located into the extender ⑩ and compressed by the collet nut ① to ensure a good grip onto the cable. A gasket, inside of the collet, provides sealing onto cable jacket. Additioned sealing is made with epoxy. To guarantee enhanced screen efficiency the shield of the cable is retained between the knurled section of the earthing body ⑦ and the crimp ring ⑤. The insulator is positioned into the two insert carrier ④. The anchor ⑥ is installed to allow retention of the cable center steel strength member.

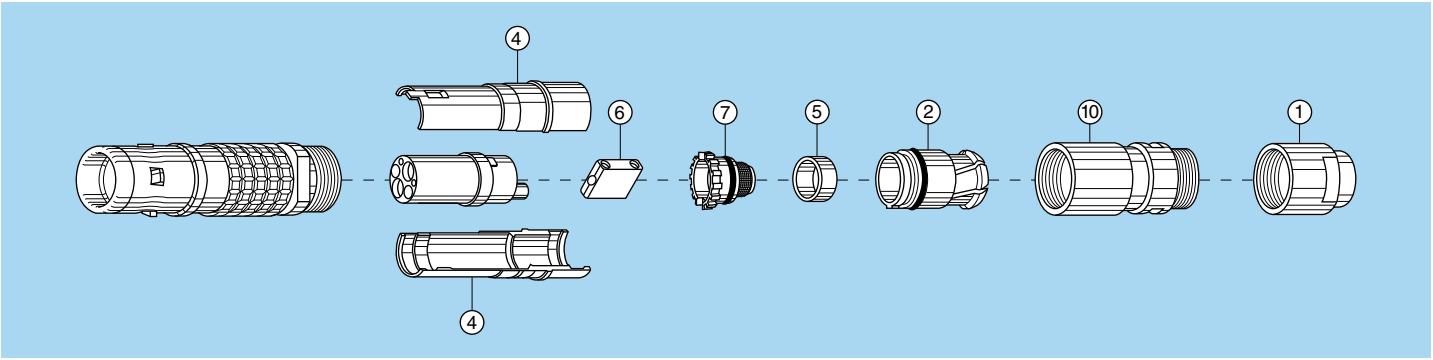

Maximum metal collet nut tightening torque

	Series										
	00	0B	0K	2B	3B	4B	5B	2K	3K	4K	5K
Torque (Nm)	0.25	0.5	0.7	2.5	4	7	10	2	3	5	8

Maximum plastic collet nut tightening torque [1)]

	Series		
	2B	3B	4B
Torque (Nm)	0.50	1.00	1.50

Note: [1)] For applications subject to strong vibration, we recommend fixing the collet nut with epoxy resin.

Preferred fibre optic cable types

The preferred and very common cable construction for use with LEMO connectors are shown below.

– Simplex semi-tight jacket cables between 2 and 3 mm in diameter and have straight lay Kevlar® reinforcement (see fig. 1).
– 900 micron plastic buffered fibres (see fig. 2).
– Multiway «break-out» cables which have additionnal overall straight lay Kevlar® to provide cable pull resistance (see fig. 3).
– Multiway «premise» cables with 900 micron plastic buffered fibres and additionnal overall straight lay Kevlar® to provide cable pull resistance (see fig. 4).

Fig. 1



Fig. 2

Fig. 3

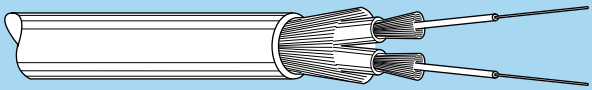

Fig. 4

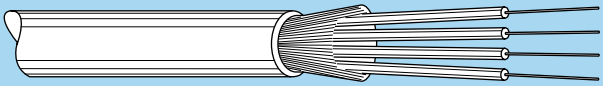

For other cable construction it is recommended that you contact us directly for advice on their suitability for termination onto LEMO connectors.

Product safety notice

PLEASE READ AND FOLLOW ALL INSTUCTIONS CAREFULLY AND CONSULT ALL RELEVENT NATIONAL AND INTERNATIONAL SAFETY REGULATIONS FOR YOUR APPLICATION.
IMPROPER HANDLING, CABLE ASSEMBLY, OR WRONG USE OF CONNECTORS CAN RESULT IN HAZARDOUS SITUATIONS.

1. **SHOCK AND FIRE HAZARD**
   Incorrect wiring, the use of damaged components, presence of foreign objects (such as metal debris), and / or residue (such as cleaning fluids), can result in short circuits, overheating, and / or risk of electric shock.
   Mated components should never be disconnected while live as this may result in an exposed electric arc and local overheating, resulting in possible damage to components.

2. **HANDLING**
   Connectors and their components should be visually inspected for damage prior to installation and assembly. Suspect components should be rejected or returned to the factory for verification.
   Connector assembly and installation should only be carried out by properly trained personnel. Proper tools must be used during installation and / or assembly in order to obtain safe and reliable performance.

3. **USE**
   Connectors with exposed contacts should never be live (or on the current supply side of a circuit). Under general conditions voltages above 30 VAC and 42 VDC are considered hazardous and proper measures should be taken to eliminate all risk of transmission of such voltages to any exposed metal part of the connector.

4. **TEST AND OPERATING VOLTAGES**
   The maximum admissible operating voltage depends upon the national or international standards in force for the application in question. Air and creepage distances impact the operating voltage; reference values are indicated in the catalog however these may be influenced by PC board design and / or wiring harnesses.
   The test voltage indicated in the catalog is 75% of the mean breakdown voltage; the test is applied at 500 V/s and the test duration is 1 minute.

5. **CE MARKING** CE
   CE marking CE means that the appliance or equipment bearing it complies with the protection requirements of one or several European safety directives.
   CE marking CE applies to complete products or equipment, **but not to electromechanical components, such as connectors**.

6. **PRODUCT IMPROVEMENTS**
   The LEMO Group reserves the right to modify and improve to our products or specifications without providing prior notification.

7. ⚠ **WARNING (Prop 65 State of California)**
   Proposition 65 requires businesses to provide warnings to Californians about significant exposures to chemicals that cause cancer, birth defects or other reproductive harm. LEMO products are exempt from proposition 65 warnings because they are manufactured, marketed, and sold solely for commercial and industrial use. For further information, please visit https://www.lemo.com/quality/LEMO-Prop-65-compliance-declaration.pdf.

Disclaimers

LEMO works constantly to improve the quality of its products; the information and illustrations figuring in this document may therefore vary and are not binding. In any case, LEMO makes no specific warranty of merchantability, fitness for a particular purpose, third party components as such or included in assembly, non-infringement, title, accuracy, completeness, or security. The user is fully responsible for his products and applications using LEMO component.

In no event shall LEMO, its affiliates, officers, agents or employees be liable for any incidental, indirect, special or consequential damages in connection with the products or services provided by LEMO, including (without limitation) loss of profits or revenues, interruption of business, loss of use of the products or any associated equipment, materials, components or products, damages to associated equipment or in combination with other components, materials.

Reproduction of significant portions of LEMO information in LEMO data books or data sheets is permissible only if reproduction is without alteration and is accompanied by all associated warranties, conditions, limitations, and notices. LEMO is not responsible or liable for such altered documentation. Information of third parties may be subject to additional restrictions.