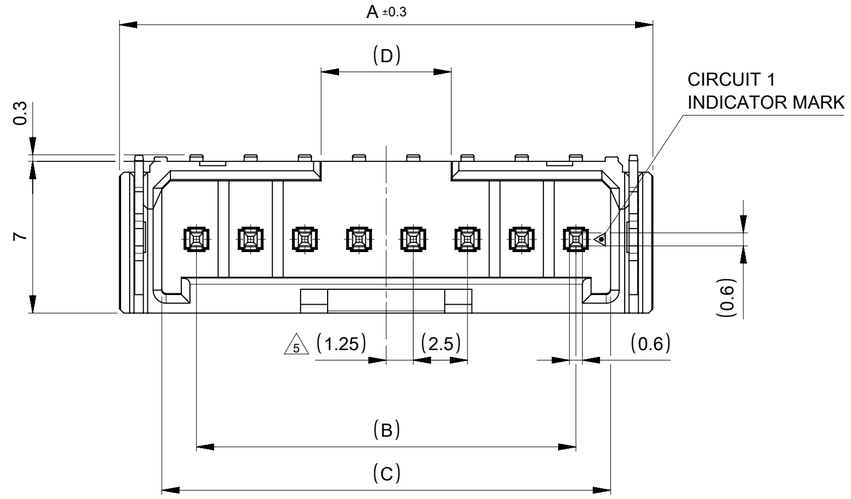

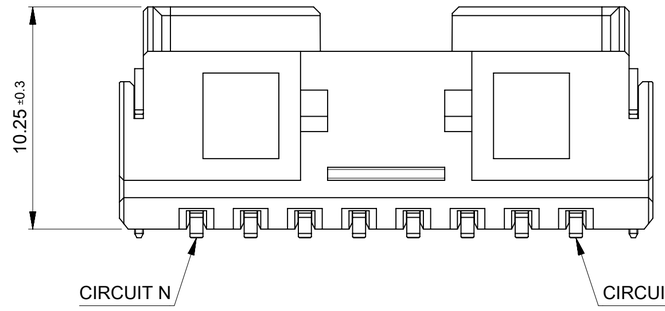

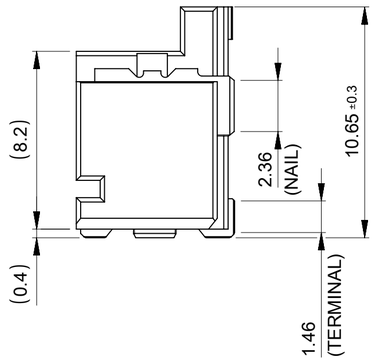

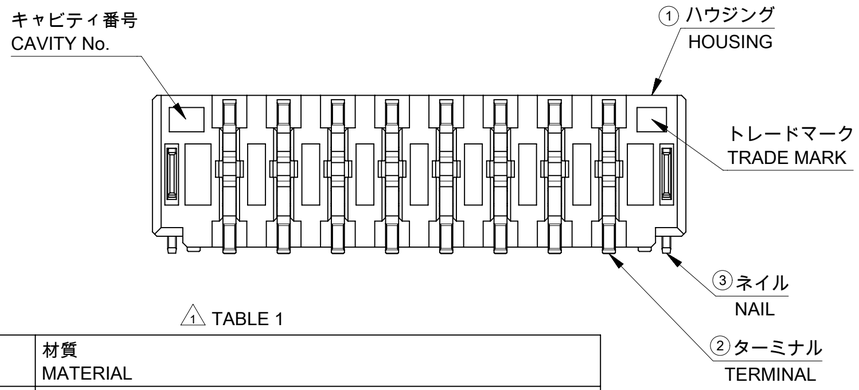

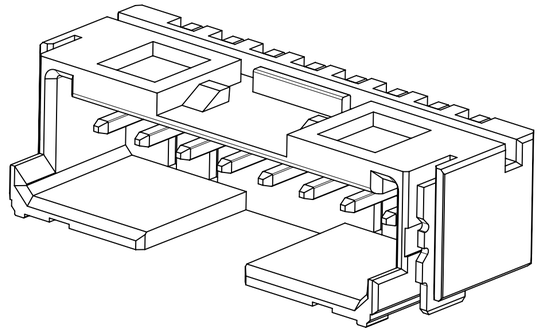

1 TABLE 1

番号 NO.	部品 PART	材質 MATERIAL
①	ハウジング HOUSING	ポリアミド(PA),ガラス充填,UL94 V-0,色：SHEET 1参照 POLYAMIDE (PA),GLASS FILLED,UL94 V-0,COLOR:SEE SHEET 1
②	ターミナル TERMINAL	黄銅 BRASS
		錫めっき：1.0 MICROMETER MINIMUM MATTE TIN PLATING
		ニッケルめっき(下地めっき)：1.0 MICROMETER MINIMUM NICKEL PLATING (UNDER PLATING)
③	ネイル NAIL	黄銅 BRASS
		錫めっき：1.0 MICROMETER MINIMUM MATTE TIN PLATING
		ニッケルめっき(下地めっき)：1.0 MICROMETER MINIMUM NICKEL PLATING (UNDER PLATING)

NOTES

1 材料及び仕上げ(めっき仕様)：TABLE 1参照
MATERIAL AND FINISHES : SEE TABLE 1
2. 製品仕様書：511630000-PS 000
PRODUCT SPECIFICATION:511630000-PS 000
3. 嵌合相手：51163 シリーズ
MATES WITH:51163 SERIES
4. アプリケーション仕様書(コネクタ取扱い説明書)：2166940000-AS PS 000
APPLICATION SPECIFICATION(CONNECTOR MANUAL) : 2166940000-AS PS 000
5 偶数極に適合
APPLY FOR EVEN CIRCUIT
6. GLOW WIRE TEST適合品
THIS PRODUCT IS GLOW WIRE TEST COMPATIBLE.
7. ターミナルとネイルの平坦度は0.15mm以下
TERMINAL AND NAIL COPLANARITY : 0.15mm MAXIMUM.
8 発注番号 ORDER NUMBER

215932 ** 7 *

極数 CIRCUIT SIZE

番号 NO.	ハウジングカラー HOUSING COLOR
0	ナチュラル(ベージュ) NATURAL(BEIGE)
1	黒 BLACK

8 製品一覧 PRODUCT LIST

				黒 BLACK	ナチュラル（ベージュ） NATURAL (BEIGE)	ハウジングカラー HOUSING COLOR
6	38.2	35	42.1	2159321571	2159321570	15
6	35.7	32.5	39.6	2159321471	2159321470	14
6	33.2	30	37.1	2159321371	2159321370	13
6	30.7	27.5	34.6	2159321271	2159321270	12
6	28.2	25	32.1	2159321171	2159321170	11
6	25.7	22.5	29.6	2159321071	2159321070	10
6	23.2	20	27.1	2159320971	2159320970	9
6	20.7	17.5	24.6	2159320871	2159320870	8
6	18.2	15	22.1	2159320771	2159320770	7
6	15.7	12.5	19.6	2159320671	2159320670	6
6	13.2	10	17.1	2159320571	2159320570	5
6	10.7	7.5	14.6	2159320471	2159320470	4
5	8.2	5	12.1	2159320371	2159320370	3
2.5	5.7	2.5	9.6	2159320271	2159320270	2
D	C	B	A	オーダー番号：ORDER NUMBER 梱包形態：エンボス梱包 PACKAGING：EMBOSSED TAPE AND REEL		極数 CIRCUIT SIZE

THIS DRAWING CONTAINS INFORMATION THAT IS PROPRIETARY TO MOLEX ELECTRONIC TECHNOLOGIES, LLC AND SHOULD NOT BE USED WITHOUT WRITTEN PERMISSION

DIMENSION UNITS	SCALE
mm	NTS

GENERAL TOLERANCES (UNLESS SPECIFIED)

ANGULAR TOL	±	3.0 °
4 PLACES	±	0.2
3 PLACES	±	0.2
2 PLACES	±	0.2
1 PLACE	±	0.2
0 PLACES	±	0.2

DRAFT WHERE APPLICABLE MUST REMAIN WITHIN DIMENSIONS

CURRENT REV DESC:

EC NO: 755760
DRWN: RWATANABE01 2023/07/05
CHK'D: AIDA 2023/07/06
APPR: SAKIYAMA 2023/07/06

INITIAL REVISION:
DRWN: RWATANABE01 2021/11/11
APPR: SAKIYAMA 2022/04/01

molex

MINI-LOCK 2.5
SINGLE ROW HEADER ASSEMBLY SMT RA

PRODUCT CUSTOMER DRAWING

DOCUMENT NUMBER	DOC TYPE	DOC PART	REVISION
2159320000-SD	PSD	000	B

THIRD ANGLE PROJECTION	DRAWING	SERIES	MATERIAL NUMBER	CUSTOMER	SHEET NUMBER
	A2-SIZE	215932	SEE SHEET1	GENERAL	1 OF 3

DOCUMENT STATUS	P1	RELEASE DATE	2023/07/06 11:27:55

FORMAT: Bi-prod-A2
REVISION: J1
DATE: 2021/05/01

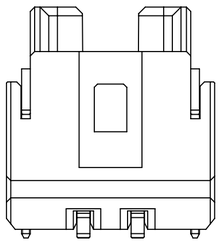

2CIRCUIT

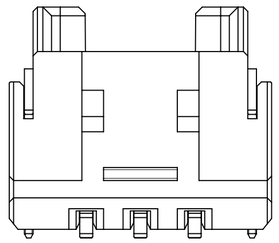

3CIRCUIT

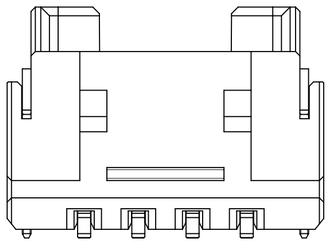

4-15CIRCUIT

ロック形状図
LOCK CONFIGURATION

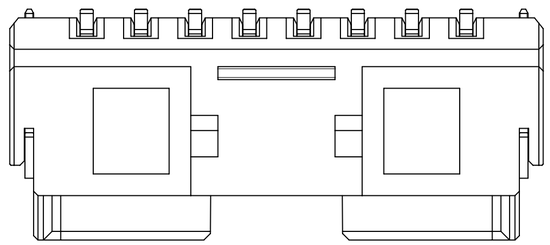

製品レイアウト
PRODUCT LAYOUT

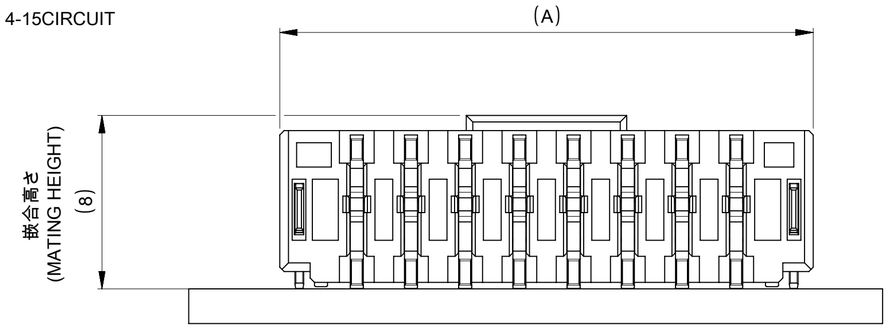

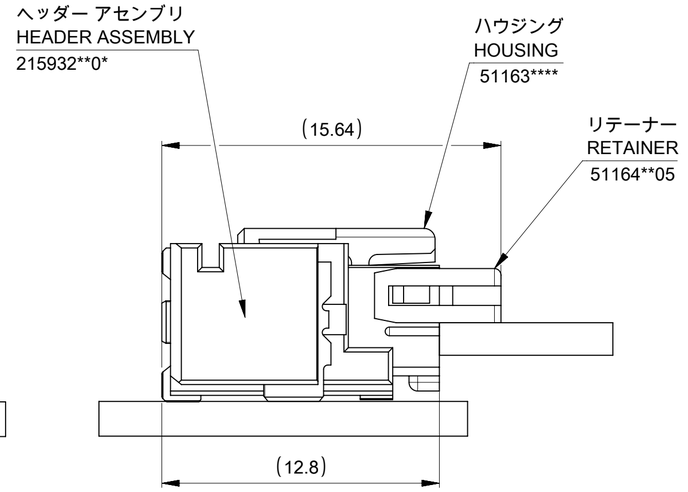

嵌合状態図
MATED CONNECTORS

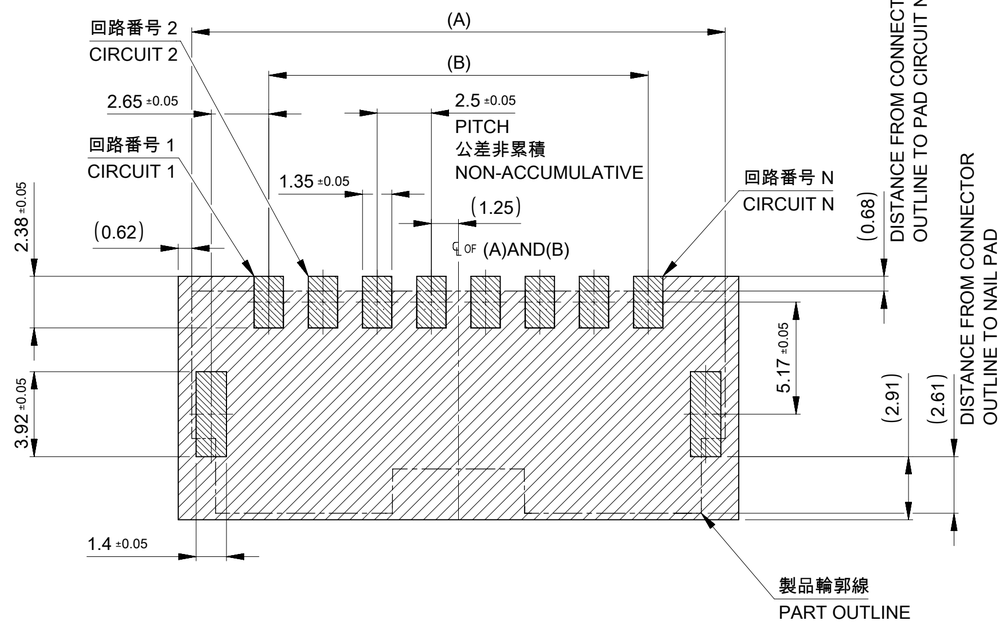

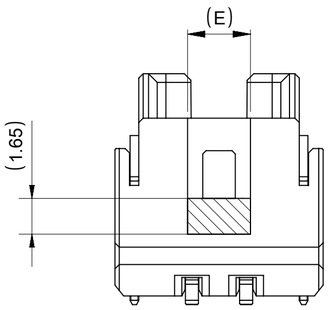

2CIRCUIT

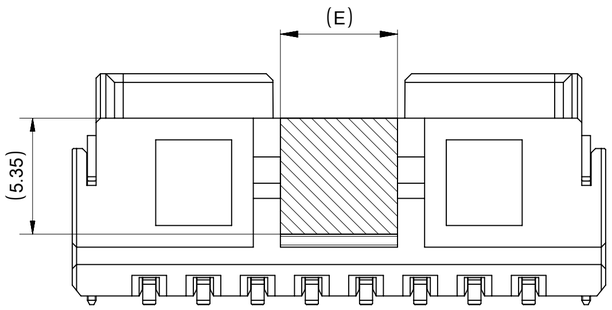

3-15CIRCUIT

吸着範囲
SUCTION AREA

5.4	15
5.4	14
5.4	13
5.4	12
5.4	11
5.4	10
5.4	9
5.4	8
5.4	7
5.4	6
5.4	5
5.4	4
3.4	3
2.9	2
E	極数 CIRCUIT SIZE

推奨基板レイアウト
RECOMMENDED PCB PATTERN LAYOUT
(参考：基板厚1.6mm, メタルマスク厚さ 0.15mm, マスク開口率 100%)
(REFERENCE: PCB THICKNESS 1.6mm, STENCIL THICKNESS 0.15mm, APERTURE RATIO 100%)

パターン非推奨エリア
パターンを引き回す際は、製品機能に影響がないことをご確認ください。
PATTERN IS NOT RECOMMENDED ON THE HATCHING AREA
PLEASE CHECK NOT TO HAVE PROBLEM FOR PRODUCT FUNCTION
WHEN SETTING PATTERN ON THE HATCHING AREA.

THIS DRAWING CONTAINS INFORMATION THAT IS PROPRIETARY TO MOLEX ELECTRONIC TECHNOLOGIES, LLC AND SHOULD NOT BE USED WITHOUT WRITTEN PERMISSION

DIMENSION UNITS	mm
SCALE	NTS
GENERAL TOLERANCES (UNLESS SPECIFIED)	
ANGULAR TOL	± 3.0 °
4 PLACES	± 0.2
3 PLACES	± 0.2
2 PLACES	± 0.2
1 PLACE	± 0.2
0 PLACES	± 0.2
DRAFT WHERE APPLICABLE MUST REMAIN WITHIN DIMENSIONS	

CURRENT REV DESC:

EC NO: 755760
DRWN: RWATANABE01 2023/07/05
CHK'D: AIDA 2023/07/06
APPR: SAKIYAMA 2023/07/06

INITIAL REVISION:
DRWN: RWATANABE01 2021/11/11
APPR: SAKIYAMA 2022/04/01

THIRD ANGLE PROJECTION | DRAWING: A2-SIZE | SERIES: 215932

molex

MINI-LOCK 2.5
SINGLE ROW HEADER ASSEMBLY SMT RA

PRODUCT CUSTOMER DRAWING

DOCUMENT NUMBER	DOC TYPE	DOC PART	REVISION
2159320000-SD	PSD	000	B

MATERIAL NUMBER	CUSTOMER	SHEET NUMBER
SEE SHEET1	GENERAL	2 OF 3

DOCUMENT STATUS	P1	RELEASE DATE	2023/07/06 11:27:55

FORMAT: master-tb-prod-A2
REVISION: J1
DATE: 2021/05/01

引き出し方向
PULL OUT DIRECTION

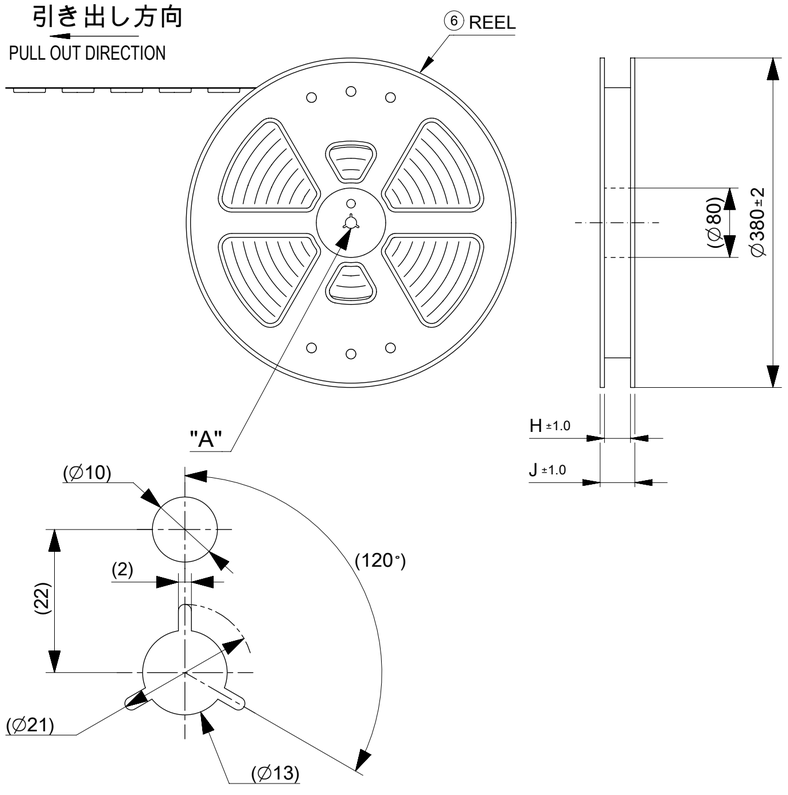

DETAIL "D"

引き出し方向
PULL OUT DIRECTION

送り穴とのずれ量 0.05 MAX
(SKEW BETWEEN ROUND AND ELONGATED SPROCKET HOLE)

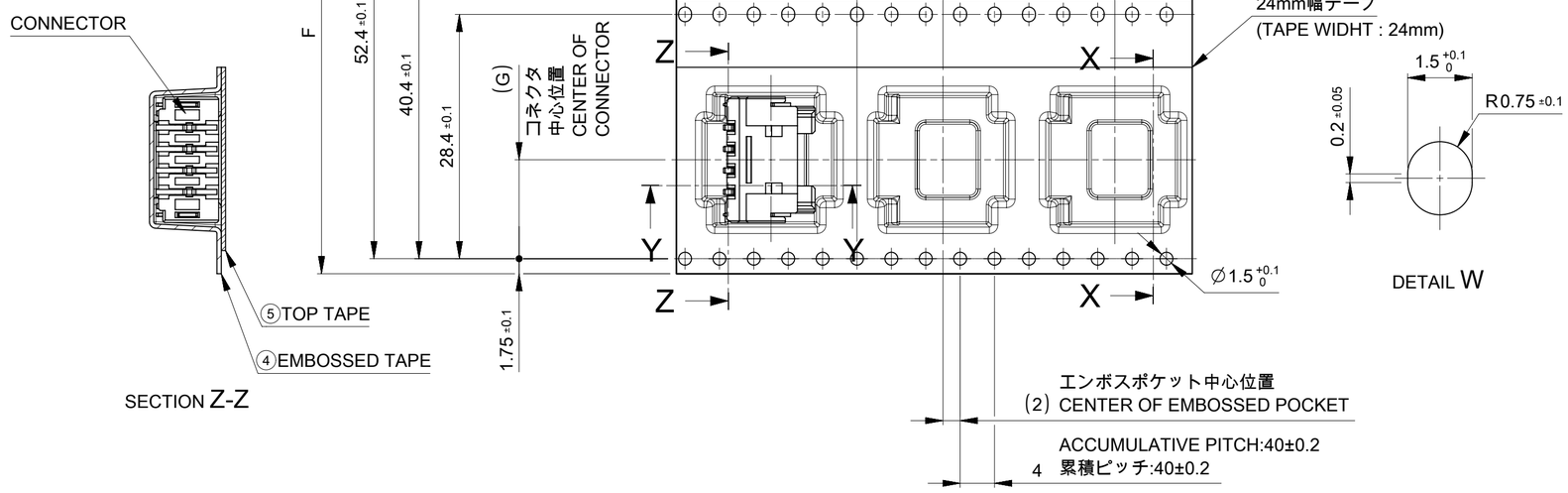

SECTION Z-Z

エンボスポケット中心位置
(2) CENTER OF EMBOSSED POCKET

ACCUMULATIVE PITCH:40±0.2
4 累積ピッチ:40±0.2

NOTES

9. 梱包数量： 440個 / リール
NUMBER OF CONNECTORS : 440 PIECES/REEL.
10. リードテープ長さ
LEAD TAPE LENGTH.

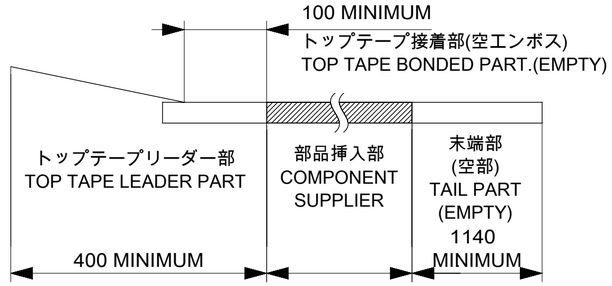

11. トップテープの剥離強度はIEC60286-3に準拠
TOP TAPE PEELING FORCE IS DEFINED BY IEC60286-3
12. 梱包仕様書：2159329200-SPK 200
PACKAGING SPECIFICATION: 2159329200-SPK 200

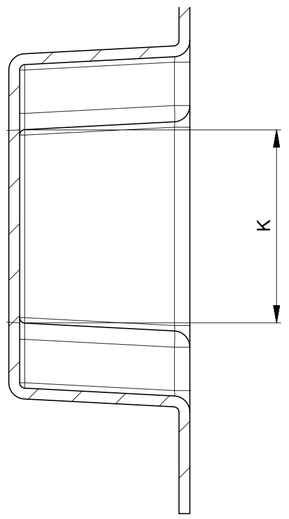

SECTION X-X

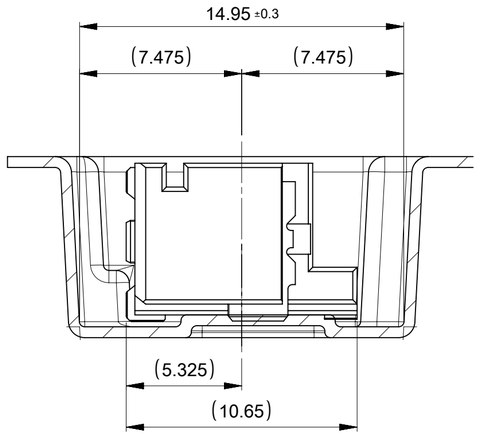

SECTION Y-Y

36.4					15
33.9					14
31.4	61.4	57.4	26.2	56 ±0.3	13
28.9					12
26.4					11
23.9					10
21.4					9
18.9	49.4	45.4	20.2	44 ±0.3	8
16.4					7
13.9					6
11.4	37.4	33.4	14.2	32 ±0.3	5
8.9					4
6.4	29.4	25.4	11.5	24 +0.3 -0.1	3
3.9					2
K	J	H	G	F	極数 CIRCUIT SIZE

番号 NO.	部品 PART	材質 MATERIAL
④	エンボステープ EMBOSSED TAPE	ポリスチレン(PS) POLYSTYRENE(PS)
⑤	トップテープ TOP TAPE	ポリエチレン(PE), その他 POLYETHYLENE(PE), ETC
⑥	リール REEL	ポリスチレン(PS) ＜リサイクル材を含む＞ POLYSTYRENE(PS) ＜RECYCLE MATERIAL CONTAINED＞

DOCUMENT STATUS	P1	RELEASE DATE	2023/07/06 11:27:55

THIS DRAWING CONTAINS INFORMATION THAT IS PROPRIETARY TO MOLEX ELECTRONIC TECHNOLOGIES, LLC AND SHOULD NOT BE USED WITHOUT WRITTEN PERMISSION

DIMENSION UNITS	SCALE
mm	NTS

GENERAL TOLERANCES (UNLESS SPECIFIED)

ANGULAR TOL	±	3.0 °
4 PLACES	±	0.2
3 PLACES	±	0.2
2 PLACES	±	0.2
1 PLACE	±	0.2
0 PLACES	±	0.2

DRAFT WHERE APPLICABLE MUST REMAIN WITHIN DIMENSIONS

CURRENT REV DESC:

EC NO: 755760
DRWN: RWATANABE01 2023/07/05
CHK'D: AIDA 2023/07/06
APPR: SAKIYAMA 2023/07/06

INITIAL REVISION:
DRWN: RWATANABE01 2021/11/11
APPR: SAKIYAMA 2022/04/01

THIRD ANGLE PROJECTION | DRAWING: A2-SIZE | SERIES: 215932

molex

MINI-LOCK 2.5
SINGLE ROW HEADER ASSEMBLY SMT RA

PRODUCT CUSTOMER DRAWING

DOCUMENT NUMBER	DOC TYPE	DOC PART	REVISION
2159320000-SD	PSD	000	B

MATERIAL NUMBER	CUSTOMER	SHEET NUMBER
SEE SHEET1	GENERAL	3 OF 3

FORMAT: master-tb-prod-A2
REVISION: J1
DATE: 2021/05/01