MH-10CL-MULTI-55-PV-BK - Cable feed-through plates

1424584

https://www.phoenixcontact.com/us/products/1424584

Please be informed that the data shown in this PDF document is generated from our online catalog. Please find the complete data in the user documentation. Our general terms of use for downloads are valid.



Cable feed-through plates, no. of conductors: 10, external cable diameter: 6x 2 mm ... 8 mm, 2x 2 mm … 18 mm, 2x 2 mm … 30 mm, material: PP (Core), material: TPE-SEBS (external material), color: black, length: 154 mm, width: 56 mm, height: 20 mm

Your advantages

- The panel cutouts of size B24 heavy-duty connectors can be used.

Commercial data

Item number	1424584
Packing unit	1 pc
Minimum order quantity	1 pc
Sales key	BF67
Product key	BF7CAX
Catalog page	Page 683 (C-2-2019)
GTIN	4055626374871
Weight per piece (including packing)	91.3 g
Weight per piece (excluding packing)	91.3 g
Customs tariff number	39269097
Country of origin	FI

MH-10CL-MULTI-55-PV-BK - Cable feed-through plates

1424584

https://www.phoenixcontact.com/us/products/1424584

Technical data

Notes

General	incl. mounting screws

Product properties

Product type	Cable feed-through
No. of conductors	10

Connection data

External cable diameter	6x 2 mm ... 8 mm
Tightening torque	1.8 Nm

Dimensions

Dimensional drawing	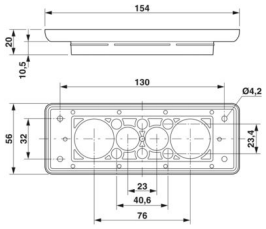
Width	56 mm
Height	20 mm
Length	154 mm
Drill hole distance, horizontal	130 mm
Drill hole distance, vertical	32 mm
Hole diameter	4 mm

Material specifications

Color	black (RAL 9005)
Material interior	PP
Material exterior	TPE-SEBS
Flammability rating according to UL 94	V0

Cable/line

External cable diameter	6x 2 mm ... 8 mm
	2x 2 mm ... 18 mm
	2x 2 mm ... 30 mm

Environmental and real-life conditions

Ambient conditions

Degree of protection	IP54
Ambient temperature (operation)	-40 °C ... 90 °C

Mounting

Assembly note	M4 mounting screw, torque: 1.8 Nm, SW5 Allen key
	The mounting screws provided are to be used for assembly. Assembly sequence: 1) Attach the cable feed-through (Multigate) using the mounting screws provided (observe torque) 2) Pierce a hole in the membrane (using a screwdriver) 3) Guide the cable through the opening (from the outside)

MH-10CL-MULTI-55-PV-BK - Cable feed-through plates

1424584

https://www.phoenixcontact.com/us/products/1424584

Drawings

Dimensional drawing

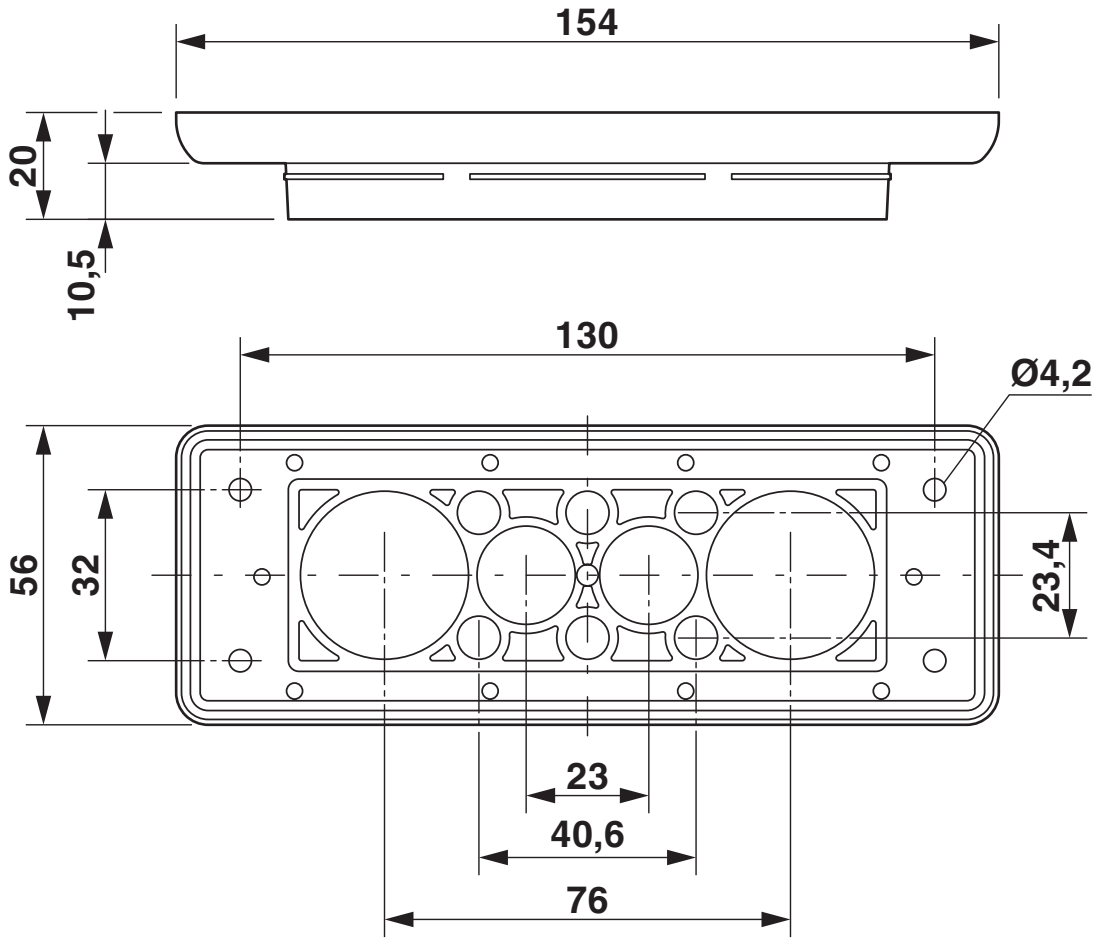

Dimensional drawing

MH-10CL-MULTI-55-PV-BK - Cable feed-through plates

1424584

https://www.phoenixcontact.com/us/products/1424584

Dimensional drawing

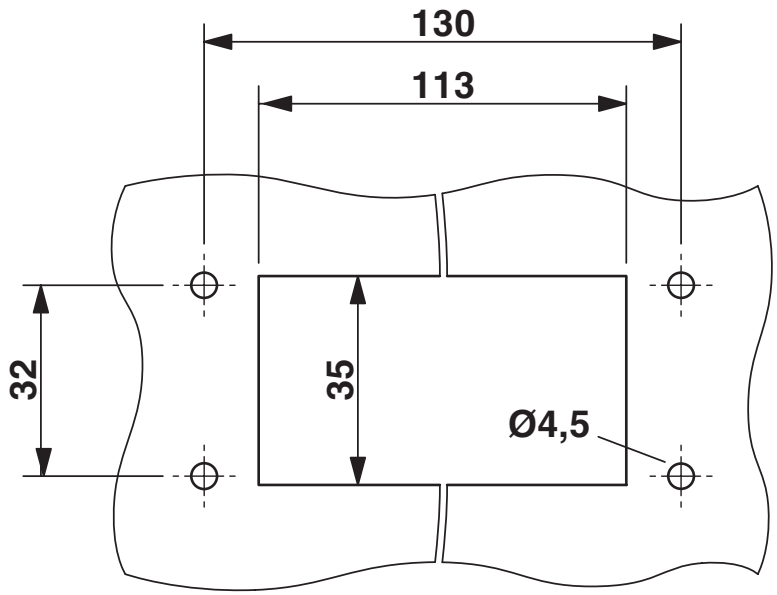

Wall cutout drawing

Approvals

To download certificates, visit the product detail page: https://www.phoenixcontact.com/us/products/1424584

EAC
Approval ID: EAC-Zulassung

EAC-RoHS
Approval ID: RU D-DE.HB35.B.00387

Classifications

ECLASS

ECLASS-11.0	27400569
ECLASS-13.0	27400569
ECLASS-12.0	27400569

ETIM

ETIM 9.0	EC001004

UNSPSC

UNSPSC 21.0	31163000

Environmental product compliance

EU RoHS

Fulfills EU RoHS substance requirements	Yes, No exemptions

China RoHS

Environment friendly use period (EFUP)	EFUP-E
	No hazardous substances above the limits

EU REACH SVHC

REACH candidate substance (CAS No.)	No substance above 0.1 wt%

Phoenix Contact 2024 © - all rights reserved
https://www.phoenixcontact.com

Phoenix Contact USA
586 Fulling Mill Road
Middletown, PA 17057, United States
(+717) 944-1300
info@phoenixcon.com