PSR-SPP- 24DC/SIM4 - Safety relays

2981949

https://www.phoenixcontact.com/us/products/2981949

Please be informed that the data shown in this PDF document is generated from our online catalog. Please find the complete data in the user documentation. Our general terms of use for downloads are valid.



Interface module for connecting several safety sensors or switches with N/C / N/O contacts to the PSR-SDC4 safety relay, plug-in Push-in terminal blocks

Your advantages

- 4 two-channel N/O or N/C contact inputs
- Up to Cat. 3/PL d in accordance with EN ISO 13849-1, SIL 2 in accordance with IEC 61508 (in conjunction with the PSR-SDC4 master)
- 4 PLC diagnostic outputs for evaluating the switching state of the safety sensors
- 4 LEDs as status indicators for the relevant sensor/switch
- PSR-TBUS connection

Commercial data

Item number	2981949
Packing unit	1 pc
Minimum order quantity	1 pc
Sales key	DN01
Product key	DNA221
Catalog page	Page 233 (C-6-2019)
GTIN	4046356325998
Weight per piece (including packing)	169.6 g
Weight per piece (excluding packing)	99.99 g
Customs tariff number	85364190
Country of origin	DE

Technical data

Notes

Note on application	Only for industrial use

Product properties

Product type	Interface module
Product family	PSRclassic

Data management status

Article revision	03

Electrical properties

Max. permissible current	100 mA (per signal output)
Max. permissible total current	100 mA (alarm outputs)
Nominal operating mode	100% operating factor

Air clearances and creepage distances between the power circuits

Rated insulation voltage	50 V DC
Rated surge voltage/insulation	0.8 kV

Input data

Nominal input voltage U_N	24 V DC (from PSR)
Input voltage range in reference to U_N	0.85 ... 1.1

Connection data

Connection technology

pluggable	yes

Conductor connection

Connection method	Push-in connection
Conductor cross section rigid	0.2 mm² ... 1.5 mm²
Conductor cross section flexible	0.2 mm² ... 1.5 mm²
Conductor cross section, flexible, with ferrule, with plastic sleeve	0.25 mm² ... 1.5 mm² (only together with CRIMPFOX 6)
Conductor cross section flexible, with ferrule without plastic sleeve	0.25 mm² ... 1.5 mm² (only together with CRIMPFOX 6)
Conductor cross-section AWG	24 ... 16
Stripping length	8 mm

Signaling

Status display	LED (green)
Status display present	Yes

Dimensions

Width	22.5 mm

Height	117 mm
Depth	106 mm

Material specifications

Housing material	Polyamide

Environmental and real-life conditions

Ambient conditions

Degree of protection	IP20
Ambient temperature (operation)	-20 °C ... 55 °C
Ambient temperature (storage/transport)	-40 °C ... 70 °C
Maximum altitude	max. 2000 m (Above sea level)

Standards and regulations

Air clearances and creepage distances between the power circuits

Standards/regulations	DIN EN 50178

Mounting

Assembly note	in rows with zero spacing
Mounting position	any

Drawings

Application drawing

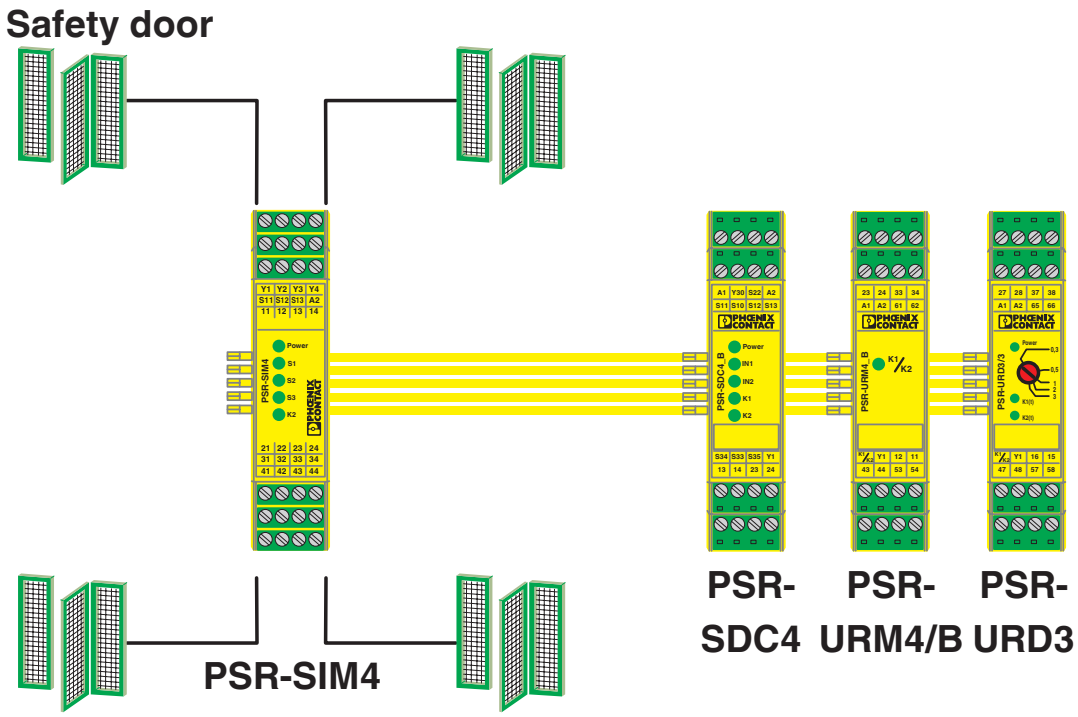

Up to 4 safety door switches can be connected to one PSR-SIM4.

Circuit diagram

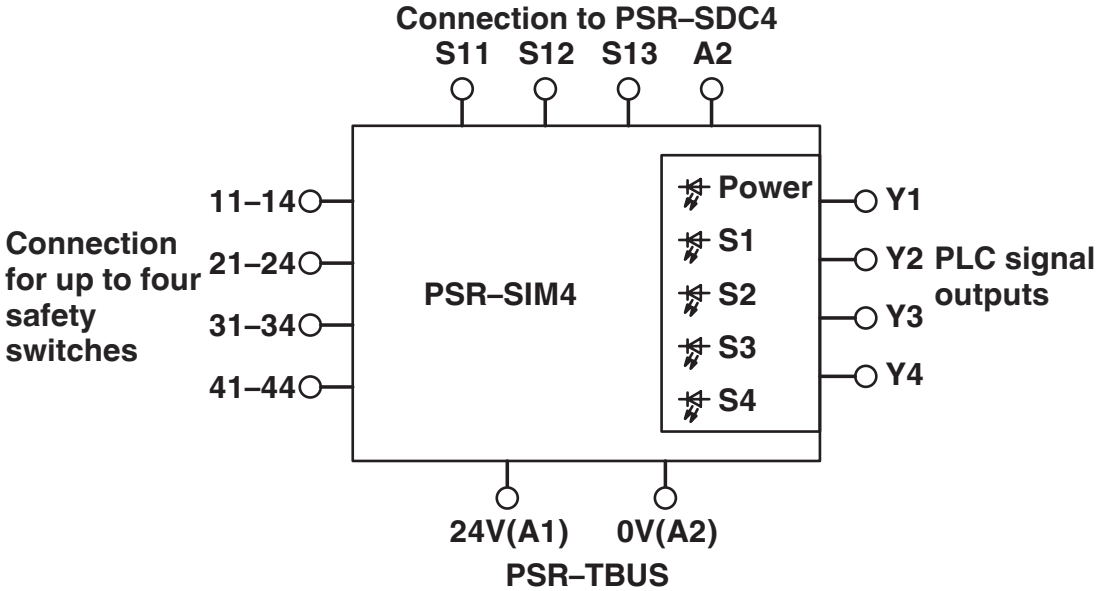

Application drawing

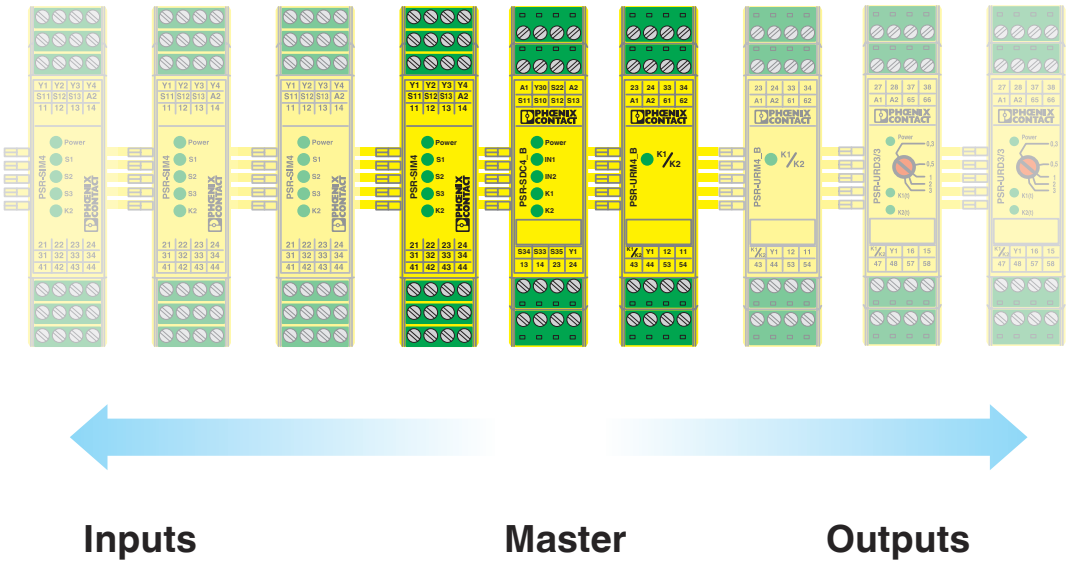

Additional inputs are aligned on the left of the PSR-SDC4, outputs are to its right.

Circuit diagram

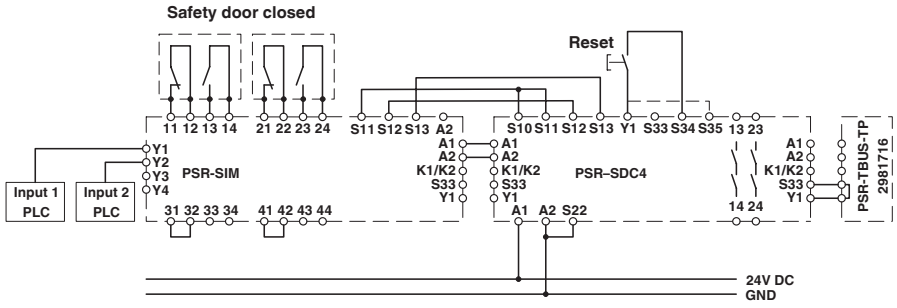

Approvals

To download certificates, visit the product detail page: https://www.phoenixcontact.com/us/products/2981949

EAC
Approval ID: TR_TS_D_00573_c

UL Listed
Approval ID: FILE E 140324

cUL Listed
Approval ID: FILE E 140324

cULus Listed

Classifications

ECLASS

ECLASS-11.0	27371819
ECLASS-12.0	27371819
ECLASS-13.0	27371819

ETIM

ETIM 9.0	EC001449

UNSPSC

UNSPSC 21.0	39122200

Environmental product compliance

EU RoHS

Fulfills EU RoHS substance requirements	Yes
Exemption	7(a), 7(c)-I

China RoHS

Environment friendly use period (EFUP)	EFUP-50
	An article-related China RoHS declaration table can be found in the download area for the respective article under "Manufacturer declaration". For all articles with EFUP-E, no China RoHS declaration table issued and required.

EU REACH SVHC

REACH candidate substance (CAS No.)	Lead(CAS: 7439-92-1)
SCIP	02fe4f76-9c2e-4db0-bebb-7a77c349bc39

Accessories

PSR-TBUS - DIN rail bus connectors

2890425

https://www.phoenixcontact.com/us/products/2890425

DIN rail connector for safety switching devices, for supplying/controlling/monitoring (depending on the module)

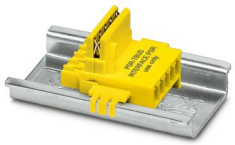

PSR-TBUS-TP - DIN rail bus connectors

2981716

https://www.phoenixcontact.com/us/products/2981716

Blind plug for the PSR-TBUS DIN rail connector used with the modular safety relay system (PSR-SDC4)



PSR-TBUS - 1PCS - DIN rail bus connectors

1326060

https://www.phoenixcontact.com/us/products/1326060



DIN rail connector for safety switching devices, for supplying/controlling/monitoring (depending on the module)

CRIMPFOX 6 - Crimping pliers

1212034

https://www.phoenixcontact.com/us/products/1212034



Crimping pliers, for ferrules without insulating collar according to DIN 46228 Part 1 and ferrules with insulating collar according to DIN 46228 Part 4, 0.25 mm^2 ... 6.0 mm^2, lateral entry, trapezoidal crimp

Phoenix Contact 2024 © - all rights reserved
https://www.phoenixcontact.com

Phoenix Contact USA
586 Fulling Mill Road
Middletown, PA 17057, United States
(+717) 944-1300
info@phoenixcon.com