GlobTek, Inc.
www.globtek.com
186 Veterans Drive,
Northvale, NJ 07647
Tel. (201) 784-1000
Fax (201) 784-0111

Drawing Title: GT-46240-2412-T2, ICT/ITE Power Supply, Efficiency Level: USA DOE Level VI / Eco-design Directive 2009/125/EC, (EU) 2019/1782, Case Color/Style: GlobTek Black, Desktop/External, Regulated Switchmode AC-DC Power Supply AC Adaptor, Input Rating: 100-240V~, 50-60 Hz, IEC 60320/C8, , Output Rating: 24.00W, 12.0V@2.0A, Pin Out: Center Positive (+V), symbol compliant with IEC 60417 symbol no. 5926, Output Configuration: 1530 mm, 18/2 Cond, UL 2468, Female Barrel 5.5*2.1*11mm WITH internal Spring Clip and Locking Notch or Equal, Ferrite: Core Size: 14.2*28.5*8.2, GlobTek Black, GT Cord # C5225, Blades/Input Cord: Not Applicable, Approvals:	
Model No. GT-46240-2412-T2	
Part No./Ordering No. TR9KE2000CCP-N(R6B)	Rev C1

In Addition to GlobTek Inc.'s renewed ISO9001:2015 - Quality Management System Certification, GlobTek Inc. is now certified to:

ISO13485:2016 - Medical Devices Quality Management System Certification
ISO14001:2015 - Environmental Management System Certification

ISO Certificates are available online at https://www.globtek.com/iso-certificates/

The acceptance of this specification and use of the product described in this document indicates the acceptance and binding of the customer to Globtek TERMS AND CONDITIONS (attached to the end of this document), which supersede all other agreements, terms, and conditions (https://www.globtek.com/terms-and-conditions/).

The purchaser of this product (Customer) agrees that it is their sole responsibility to determine suitability/fitness of the product described in this specification for their application and to take precautions for protection against any hazards attendant to the handling and use of the product.

Footnote:

GlobTek Inc. will not be liable for the safety and performance of these power supplies/battery packs if unauthorized access and repair occurs. End user should consult applicable UL, CSA or EN standards for proper installation instruction.

Limitation of Use:

GlobTek products are intended for use with commercial, medical, and/or industrial equipment only. GlobTek product are not authorized for use as mission critical components in life support hazardous environment, nuclear or aircraft applications without prior written approval from the CEO of GlobTek Inc.
Contents of this document are subject to change without prior notice.

Customer Approval of Specification:

Please approve, sign and send back to GlobTek so we can complete order processing.
A delay in receipt of this form will delay delivery schedule.

Company Name:	Customer P/N:
Quote Number:	Date:
Authorized Representative Name:	Authorized Representative Signature:

PROPRIETARY INFORMATION
PROPRIETARY OF GLOBTEK, INC. ANY REPRODUCTION, DISCLOSURE OR USE OF THIS DRAWING, IN WHOLE OR IN PART, IS HEREBY PROHIBITED EXCEPT AS SPECIFIED IN WRITING BY GLOBTEK, INC. © GlobTek, Inc. 2016 - 2024
guest / 05/25/2024 9:04:14 AM GMT CLONED FROM TR9KH1330CCP-N(R6B)

GlobTek, Inc.
www.globtek.com
186 Veterans Drive,
Northvale, NJ 07647
Tel. (201) 784-1000
Fax (201) 784-0111

Drawing Title: GT-46240-2412-T2, ICT/ITE Power Supply, Efficiency Level: USA DOE Level VI / Eco-design Directive 2009/125/EC, (EU) 2019/1782, Case Color/Style: GlobTek Black, Desktop/External, Regulated Switchmode AC-DC Power Supply AC Adaptor, Input Rating: 100-240V~, 50-60 Hz, IEC 60320/C8, , Output Rating: 24.00W, 12.0V@2.0A, Pin Out: Center Positive (+V), symbol compliant with IEC 60417 symbol no. 5926, Output Configuration: 1530 mm, 18/2 Cond, UL 2468, Female Barrel 5.5*2.1*11mm WITH internal Spring Clip and Locking Notch or Equal, Ferrite: Core Size: 14.2*28.5*8.2, GlobTek Black, GT Cord # C5225, Blades/Input Cord: Not Applicable, Approvals:	
Model No. GT-46240-2412-T2	
Part No./Ordering No. TR9KE2000CCP-N(R6B)	Rev C1

REVISION HISTORY

REV	DESCRIPTION	SUB	DATE	APPROVED
C1	Revised packaging: change from egg crate to gift box.	rchiu	10/31/2017	QA
C	Update packaging Update output cord	rchiu	09/19/2017	QA
B	Change core size from 12*20*7.3 mm to 14.2*28.5*8.2 mm, change O/P cord tolerance from 1500+80,-0 to 1500+150,-0 mm	QA	09/11/2017	QA
A1	Update approval: remove CCC warning words 'non-tropic'	QA	09/05/2017	QA
A	Initial release.	emcna	09/22/2016	QA

POWER SUPPLY INFORMATION

TYPE	Desktop/External
TECHNOLOGY	Regulated Switchmode AC-DC Power Supply AC Adaptor
CASE COLOR	GlobTek Black
NAMEPLATE RATED INPUT	100-240V~, 50-60 Hz, 0.6 A
INPUT CONFIG	IEC 60320/C8
WATTS	24.00
VOLTS OUT	12.0
CURRENT OUT (Amps)	2.0
BLADE/CORD INCLUDED	N/A Not Applicable
BLADE/CORD INSTALLED	N/A :Not Applicable
INGRESS PROTECTION	IP42
GROUNDING CONFIGURATION	(F1) Floating output, Class II / double insulated
EFFICIENCY LEVEL	USA DOE Level VI / Eco-design Directive 2009/125/EC, (EU) 2019/1782 - Europe Code of Conduct on Energy Efficiency of External Power Supplies - Version 5
OUTPUT CONFIGURATION	1530 mm, 18/2 Cond, UL 2468, Female Barrel 5.5*2.1*11mm WITH internal Spring Clip and Locking Notch or Equal, Ferrite: Core Size: 14.2*28.5*8.2, GlobTek Black, GT Cord # C5225
CONNECTOR PIN OUT	Center Positive (+V), symbol compliant with IEC 60417 symbol no. 5926
LABEL SPECS	Standard GT,L-1186
SPECIAL BARCODE LABEL MATERIAL	No
PACK SPEC	Standard DT, Individually Box, GT User Manual
USER MANUAL	809-DESKTOPUSERMANUAL on A4 paper

PROPRIETARY INFORMATION
PROPRIETARY OF GLOBTEK, INC. ANY REPRODUCTION, DISCLOSURE OR USE OF THIS DRAWING, IN WHOLE OR IN PART, IS HEREBY PROHIBITED EXCEPT AS SPECIFIED IN WRITING BY GLOBTEK, INC. © GlobTek, Inc. 2016 - 2024
guest / 05/25/2024 9:04:14 AM GMT CLONED FROM TR9KH1330CCP-N(R6B)

GlobTek, Inc.
www.globtek.com
186 Veterans Drive,
Northvale, NJ 07647
Tel. (201) 784-1000
Fax (201) 784-0111

Drawing Title: GT-46240-2412-T2, ICT/ITE Power Supply, Efficiency Level: USA DOE Level VI / Eco-design Directive 2009/125/EC, (EU) 2019/1782, Case Color/Style: GlobTek Black, Desktop/External, Regulated Switchmode AC-DC Power Supply AC Adaptor, Input Rating: 100-240V~, 50-60 Hz, IEC 60320/C8, , Output Rating: 24.00W, 12.0V@2.0A, Pin Out: Center Positive (+V), symbol compliant with IEC 60417 symbol no. 5926, Output Configuration: 1530 mm, 18/2 Cond, UL 2468, Female Barrel 5.5*2.1*11mm WITH internal Spring Clip and Locking Notch or Equal, Ferrite: Core Size: 14.2*28.5*8.2, GlobTek Black, GT Cord # C5225, Blades/Input Cord: Not Applicable, Approvals:	
Model No. GT-46240-2412-T2	
Part No./Ordering No. TR9KE2000CCP-N(R6B)	Rev C1

Notes/Modifications/Customizations (notes in this section supersede the values shown in the standard spec)

DIMENSIONS ARE IN MM UNLESS SPECIFIED OTHERWISE

PROPRIETARY INFORMATION

PROPRIETARY OF GLOBTEK, INC. ANY REPRODUCTION, DISCLOSURE OR USE OF THIS DRAWING, IN WHOLE OR IN PART, IS HEREBY PROHIBITED EXCEPT AS SPECIFIED IN WRITING BY GLOBTEK, INC. © GlobTek, Inc. 2016 - 2024

guest / 05/25/2024 9:04:14 AM GMT CLONED FROM TR9KH1330CCP-N(R6B)

ELECTRICAL SPECIFICATIONS

A) ELECTRICAL SPECIFICATIONS:
01. Input Voltage: Specified 90-264 Vac, Nameplate rated: 100-240Vac
02. Input Frequency: Specified 47-63 Hz, Nameplate rated 50-60Hz
03. Inrush Current: 50A Max. at 115VAC cold start, 100A Max. at 230VAC cold start
04. Average Efficiency: 86.2% Min (CEC & DOE LEVEL VI Compliant); 86.8% Min (ErP European Commission's Ecodesign Directive (2005/32/EC) / CoC Tier 2 Compliant)
05. Input Power(no load): <0.1W (CEC &DOE Level VI Compliant); <0.075W ErP European Commission's Ecodesign Directive (2005/32/EC) / CoC Tier 2 Compliant)
06. Output Voltage toterance: ±5%
07.Load regulation: ±5%
08. Output Voltage: Tolerance ± 5%
09. Turn On Delay: 3000 mS MAX at 115 VAC Full Load
10. Hold Up Time: 10 mS Min at 100 VAC Full Load
11. Ripple and Noise (Vp-p): 100 mVp-p maximum, At 20 MHz, and output parallel with 0.1uF & 47uF capacitors to ground. Temperature at 25 °C, and nominal input voltage

B) PROTECTION
01. Over voltage protection: protection zener
02. Short circuit protection: Output shut down and auto- recover
03.Over Load Protection: Output shut down and auto restart

C) SAFETY
01. HI-POT : Input to output : 1500VAC or 2121VDC 10mA 1 minute
02. Earth Leakage Current: <3.5 mA at 240Vac input voltage
03. Insulation resistance: Input to output: 500vdc to test the input to output resistance not be less 100M ohm
04. Earth continuity test:<0.1 Ohm or < 0.2 Ohm when with a non-detachable Power Supply cord, Class I Only

D) OTHER:
01. MTBF: 200,000 Hours @ 25°C ambient temperature
02. Operating Temperature: 0°C to 40°C ambient temperature
03. Humidity Operating : 20% to 80%. 0% to 90% relative humidity
04. Storage Temperature: -10°C to 70°C
Humidity Storage: 10% to 90%
05. RoHS 2: Complies with EU 2015/863 and China SJ/T 11363-2014

E) ENCLOSURE
01. Housing: High impact plastic, 94V0 polycarbonate, non-vented
02. Size: 80.6*50.0*31.0 +/-1.0 mm
03. Markings: Label and/or Pad Printed and/or Molded in the case

PROPRIETARY INFORMATION
PROPRIETARY OF GLOBTEK, INC. ANY REPRODUCTION, DISCLOSURE OR USE OF THIS DRAWING, IN WHOLE OR IN PART, IS HEREBY PROHIBITED EXCEPT AS SPECIFIED IN WRITING BY GLOBTEK, INC. © GlobTek, Inc. 2016 - 2024
guest / 05/25/2024 9:04:14 AM GMT CLONED FROM TR9KH1330CCP-N(R6B)

GlobTek, Inc.
www.globtek.com
186 Veterans Drive,
Northvale, NJ 07647
Tel. (201) 784-1000
Fax (201) 784-0111

Drawing Title: GT-46240-2412-T2, ICT/ITE Power Supply, Efficiency Level: USA DOE Level VI / Eco-design Directive 2009/125/EC, (EU) 2019/1782, Case Color/Style: GlobTek Black, Desktop/External, Regulated Switchmode AC-DC Power Supply AC Adaptor, Input Rating: 100-240V~, 50-60 Hz, IEC 60320/C8, , Output Rating: 24.00W, 12.0V@2.0A, Pin Out: Center Positive (+V), symbol compliant with IEC 60417 symbol no. 5926, Output Configuration: 1530 mm, 18/2 Cond, UL 2468, Female Barrel 5.5*2.1*11mm WITH internal Spring Clip and Locking Notch or Equal, Ferrite: Core Size: 14.2*28.5*8.2, GlobTek Black, GT Cord # C5225, Blades/Input Cord: Not Applicable, Approvals:	
Model No. GT-46240-2412-T2	
Part No./Ordering No. TR9KE2000CCP-N(R6B)	Rev C1

TO ADDRESS SYSTEM-LEVEL EMI CONCERNS, FERRITE CHOKES/BEADS MAY BE ADDED/REVISED UPON REQUEST. A SAMPLE KIT OF GLOBTEK'S STANDARD FERRITES IS AVAILABLE UNDER GLOBTEK P/N: EMI-MITIGATION-KIT1

FOR ADDITIONAL INFORMATION, PLEASE READ OUR WHITE PAPER AT: https://r.globtek.info/3QeaqtD

INGRESS PROTECTION: IP42

PROPRIETARY INFORMATION
PROPRIETARY OF GLOBTEK, INC. ANY REPRODUCTION, DISCLOSURE OR USE OF THIS DRAWING, IN WHOLE OR IN PART, IS HEREBY PROHIBITED EXCEPT AS SPECIFIED IN WRITING BY GLOBTEK, INC. © GlobTek, Inc. 2016 - 2024
guest / 05/25/2024 9:04:14 AM GMT CLONED FROM TR9KH1330CCP-N(R6B)

GlobTek, Inc. www.globtek.com 186 Veterans Drive, Northvale, NJ 07647 Tel. (201) 784-1000 Fax (201) 784-0111	Drawing Title: GT-46240-2412-T2, ICT/ITE Power Supply, Efficiency Level: USA DOE Level VI / Eco-design Directive 2009/125/EC, (EU) 2019/1782, Case Color/Style: GlobTek Black, Desktop/External, Regulated Switchmode AC-DC Power Supply AC Adaptor, Input Rating: 100-240V~, 50-60 Hz, IEC 60320/C8, , Output Rating: 24.00W, 12.0V@2.0A, Pin Out: Center Positive (+V), symbol compliant with IEC 60417 symbol no. 5926, Output Configuration: 1530 mm, 18/2 Cond, UL 2468, Female Barrel 5.5*2.1*11mm WITH internal Spring Clip and Locking Notch or Equal, Ferrite: Core Size: 14.2*28.5*8.2, GlobTek Black, GT Cord # C5225, Blades/Input Cord: Not Applicable, Approvals:	
	Model No. GT-46240-2412-T2	
	Part No./Ordering No. TR9KE2000CCP-N(R6B)	Rev C1

3D File Download https://www.globtek.com/file/dl/gt-46240-24vv-x_x-t2.stp

Mechanical drawing

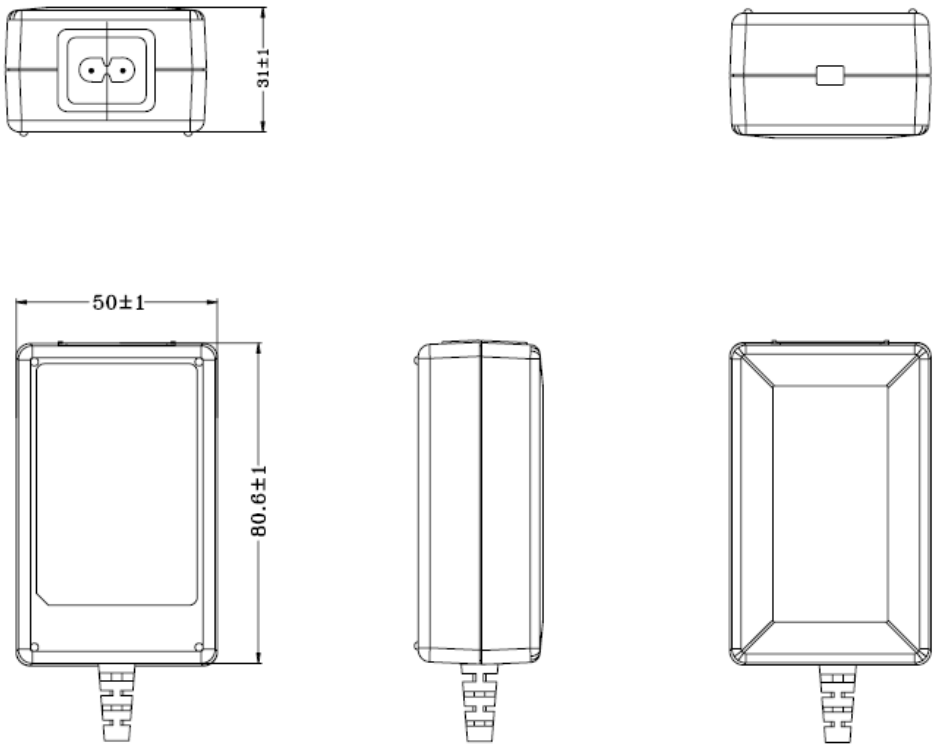

PROPRIETARY INFORMATION
PROPRIETARY OF GLOBTEK, INC. ANY REPRODUCTION, DISCLOSURE OR USE OF THIS DRAWING, IN WHOLE OR IN PART, IS HEREBY PROHIBITED EXCEPT AS SPECIFIED IN WRITING BY GLOBTEK, INC. © GlobTek, Inc. 2016 - 2024
guest / 05/25/2024 9:04:14 AM GMT CLONED FROM TR9KH1330CCP-N(R6B)

GlobTek, Inc.
www.globtek.com
186 Veterans Drive,
Northvale, NJ 07647
Tel. (201) 784-1000
Fax (201) 784-0111

Drawing Title: GT-46240-2412-T2, ICT/ITE Power Supply, Efficiency Level: USA DOE Level VI / Eco-design Directive 2009/125/EC, (EU) 2019/1782, Case Color/Style: GlobTek Black, Desktop/External, Regulated Switchmode AC-DC Power Supply AC Adaptor, Input Rating: 100-240V~, 50-60 Hz, IEC 60320/C8, , Output Rating: 24.00W, 12.0V@2.0A, Pin Out: Center Positive (+V), symbol compliant with IEC 60417 symbol no. 5926, Output Configuration: 1530 mm, 18/2 Cond, UL 2468, Female Barrel 5.5*2.1*11mm WITH internal Spring Clip and Locking Notch or Equal, Ferrite: Core Size: 14.2*28.5*8.2, GlobTek Black, GT Cord # C5225, Blades/Input Cord: Not Applicable, Approvals:	
Model No. GT-46240-2412-T2	
Part No./Ordering No. TR9KE2000CCP-N(R6B)	Rev C1

DERATING CURVE

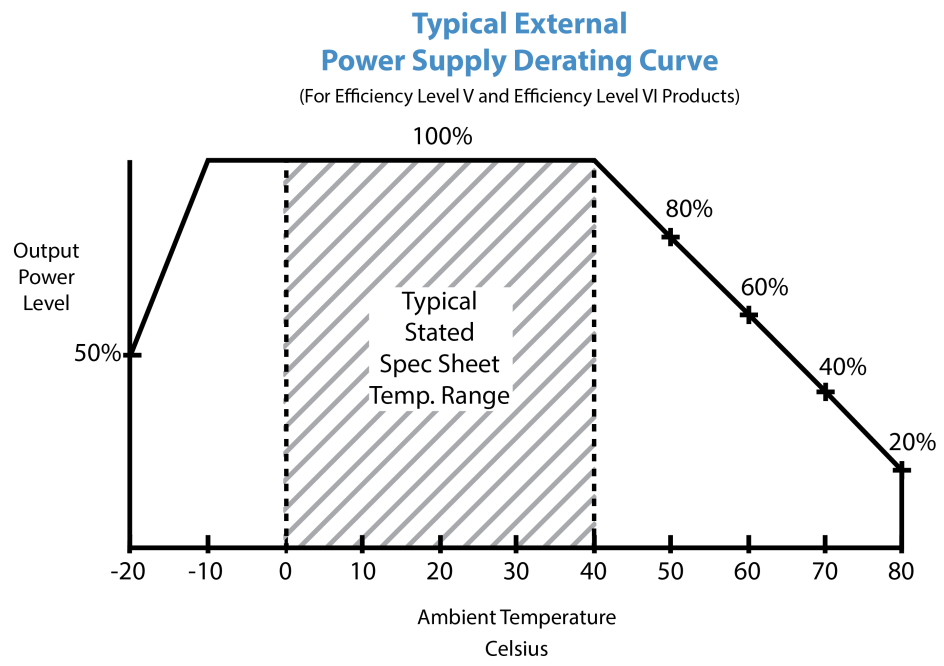

PROPRIETARY INFORMATION
PROPRIETARY OF GLOBTEK, INC. ANY REPRODUCTION, DISCLOSURE OR USE OF THIS DRAWING, IN WHOLE OR IN PART, IS HEREBY PROHIBITED EXCEPT AS SPECIFIED IN WRITING BY GLOBTEK, INC. © GlobTek, Inc. 2016 - 2024
guest / 05/25/2024 9:04:14 AM GMT CLONED FROM TR9KH1330CCP-N(R6B)

GlobTek, Inc.
www.globtek.com
186 Veterans Drive,
Northvale, NJ 07647
Tel. (201) 784-1000
Fax (201) 784-0111

Drawing Title: GT-46240-2412-T2, ICT/ITE Power Supply, Efficiency Level: USA DOE Level VI / Eco-design Directive 2009/125/EC, (EU) 2019/1782, Case Color/Style: GlobTek Black, Desktop/External, Regulated Switchmode AC-DC Power Supply AC Adaptor, Input Rating: 100-240V~, 50-60 Hz, IEC 60320/C8, , Output Rating: 24.00W, 12.0V@2.0A, Pin Out: Center Positive (+V), symbol compliant with IEC 60417 symbol no. 5926, Output Configuration: 1530 mm, 18/2 Cond, UL 2468, Female Barrel 5.5*2.1*11mm WITH internal Spring Clip and Locking Notch or Equal, Ferrite: Core Size: 14.2*28.5*8.2, GlobTek Black, GT Cord # C5225, Blades/Input Cord: Not Applicable, Approvals:	
Model No. GT-46240-2412-T2	
Part No./Ordering No. TR9KE2000CCP-N(R6B)	Rev C1

INPUT CONFIGURATION

(F1) Floating output, Class II / double insulated

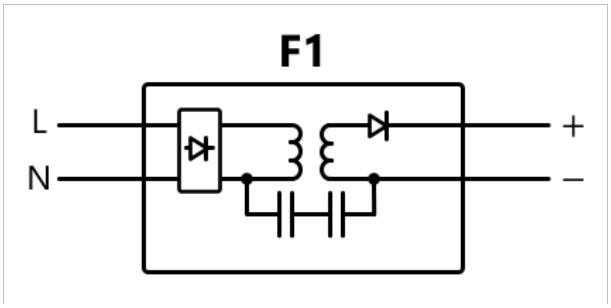

Alternate grounding configurations available upon request.

Blades/Cord Included:N/A:Not Applicable

Blades/Cord Installed:N/A:Not Applicable

T2 Inlet (IEC 60320/C8)
IEC 60320/C8 AC Inlet connector, Class II, Non-Earth Ground (aka "Figure-8")

PROPRIETARY INFORMATION
PROPRIETARY OF GLOBTEK, INC. ANY REPRODUCTION, DISCLOSURE OR USE OF THIS DRAWING, IN WHOLE OR IN PART, IS HEREBY PROHIBITED EXCEPT AS SPECIFIED IN WRITING BY GLOBTEK, INC. © GlobTek, Inc. 2016 - 2024
guest / 05/25/2024 9:04:14 AM GMT CLONED FROM TR9KH1330CCP-N(R6B)

GlobTek, Inc.
www.globtek.com
186 Veterans Drive,
Northvale, NJ 07647
Tel. (201) 784-1000
Fax (201) 784-0111

Drawing Title: GT-46240-2412-T2, ICT/ITE Power Supply, Efficiency Level: USA DOE Level VI / Eco-design Directive 2009/125/EC, (EU) 2019/1782, Case Color/Style: GlobTek Black, Desktop/External, Regulated Switchmode AC-DC Power Supply AC Adaptor, Input Rating: 100-240V~, 50-60 Hz, IEC 60320/C8, , Output Rating: 24.00W, 12.0V@2.0A, Pin Out: Center Positive (+V), symbol compliant with IEC 60417 symbol no. 5926, Output Configuration: 1530 mm, 18/2 Cond, UL 2468, Female Barrel 5.5*2.1*11mm WITH internal Spring Clip and Locking Notch or Equal, Ferrite: Core Size: 14.2*28.5*8.2, GlobTek Black, GT Cord # C5225, Blades/Input Cord: Not Applicable, Approvals:	
Model No. GT-46240-2412-T2	
Part No./Ordering No. TR9KE2000CCP-N(R6B)	Rev C1

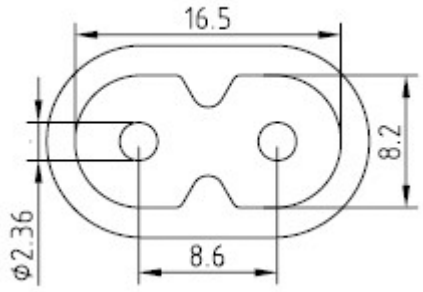

Mates with IEC 60320/C7 Plug

Below are standard cordsets which are "not included" (unless stated above); these may be purchased separately or packaged with the power supply. Please contact your Sales Engineer if the style required is not shown below. Many more available in different lengths, colors or cable material.

Standard International IEC 320/C7 Cordsets

Part Number	Type	Standard	Connector	Length (mm)	Length (feet)
2094112M703(R)	Argentina (Type I)	IRAM 2063	IEC 320/C7	2000	7
5014112M703A(R)	Australian (Type I)	AS 3112	IEC 320/C7	2000	7
207B4111M8703(R)	Brazil (Type N)	NBR14136	IEC 320/C7	1800	6
4533501M8703(R)	China (Type A)	GB 2099.1	IEC 320/C7	1830	6
2074112M703A(R)	European (Type C)	CEE 7/16	IEC 320/C7	2000	7
2074112M703AEUSA(R)	European/South Africa Combo(Type C)	CEE 7/16	IEC 320/C7	2000	7
2084111M8703B(R)	India (Type D)	IS 1293	IEC 320/C7	1800	6
451J3401M8703(R)	Japan (Type A)	JIS 8303	IEC 320/C7	1830	6
2044112M703A(R)	Korea (Type C)	KS C8305	IEC 320/C7	2000	7
4511116F703A(R)	North America (Type A)	NEMA 1-15P	IEC 320/C7	1830	6
2084111M8703(R)	South Africa (Type M)	BS 546	IEC320/C7	1830	6
4033401M8703A(R)	Taiwan (Type A)	CNS690	IEC 320/C7	1830	6
6104112M703A(R)	UK, Hong Kong, Singapore, Gulf States (Type G)	BS1363	IEC 320/C7	2000	7
451G1116F703A(R)	Gulf States (Kuwait, Bahrain, Oman, Qatar, Saudi Arabia, Yemen and the United Arab Emirates (UAE)(Type A)	Nema 1-15P	IEC320/C7	1830	6
6303742M5703(R)	Thailand (Type C)	TIS 166-2549	IEC320/C7	2500	8

PROPRIETARY INFORMATION
PROPRIETARY OF GLOBTEK, INC. ANY REPRODUCTION, DISCLOSURE OR USE OF THIS DRAWING, IN WHOLE OR IN PART, IS HEREBY PROHIBITED EXCEPT AS SPECIFIED IN WRITING BY GLOBTEK, INC. © GlobTek, Inc. 2016 - 2024
guest / 05/25/2024 9:04:14 AM GMT CLONED FROM TR9KH1330CCP-N(R6B)

GlobTek, Inc.
www.globtek.com
186 Veterans Drive,
Northvale, NJ 07647
Tel. (201) 784-1000
Fax (201) 784-0111

Drawing Title: GT-46240-2412-T2, ICT/ITE Power Supply, Efficiency Level: USA DOE Level VI / Eco-design Directive 2009/125/EC, (EU) 2019/1782, Case Color/Style: GlobTek Black, Desktop/External, Regulated Switchmode AC-DC Power Supply AC Adaptor, Input Rating: 100-240V~, 50-60 Hz, IEC 60320/C8, , Output Rating: 24.00W, 12.0V@2.0A, Pin Out: Center Positive (+V), symbol compliant with IEC 60417 symbol no. 5926, Output Configuration: 1530 mm, 18/2 Cond, UL 2468, Female Barrel 5.5*2.1*11mm WITH internal Spring Clip and Locking Notch or Equal, Ferrite: Core Size: 14.2*28.5*8.2, GlobTek Black, GT Cord # C5225, Blades/Input Cord: Not Applicable, Approvals:

Model No. GT-46240-2412-T2

Part No./Ordering No. TR9KE2000CCP-N(R6B) Rev C1

OUTPUT CORD AND CONNECTOR: C1S/C5225

ACTUAL CONNECTORS, OVERMOLDS, FERRITES MAY VARY SLIGHTLY FROM THE PICTURE BELOW

CABLE TYPE	UL 2468
CABLE LENGTH (mm)	1530
CABLE TOLERANCE (mm)	+150,-0
WIRE GAUGE (AWG)	18
CONDUCTORS	2
HANK DIMENSION (mm)	95 ± 10
CABLE / CONNECTOR OVERMOLD COLOR	GlobTek Black
FERRITE TYPE AND DIMENSION	Core Size: 14.2*28.5*8.2
FERRITE NUMBER OF TURNS(Definition)	2 Pass thru core (1 turns)
FERRITE DIMENSION FROM STRAIN RELIEF	50 ± 10
FERRITE DIMENSION FROM PLUG	N/A
PLUG TYPE	Female Barrel 5.5*2.1*11mm WITH internal Spring Clip and Locking Notch or Equal
OVER MOLD ORIENTATION	Straight
CONNECTOR PIN OUT	Center Positive (+V), symbol compliant with IEC 60417 symbol no. 5926

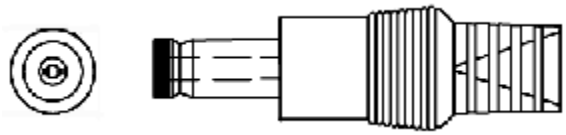

ADDITIONAL OUTPUT PLUG OPTIONS ARE AVAILABLE AT https://www.globtek.com/en/connectors
STANDARD PLUGS AND CONNECTORS CAN BE SEEN ONLINE AT https://www.globtek.com/en/connectors
CALCULATE VOLTAGE REGULATION/DROP WITH OUR ONLINE CALCULATOR: https://www.globtek.com/r2/PtqjjL

PROPRIETARY INFORMATION
PROPRIETARY OF GLOBTEK, INC. ANY REPRODUCTION, DISCLOSURE OR USE OF THIS DRAWING, IN WHOLE OR IN PART, IS HEREBY PROHIBITED EXCEPT AS SPECIFIED IN WRITING BY GLOBTEK, INC. © GlobTek, Inc. 2016 - 2024
guest / 05/25/2024 9:04:14 AM GMT CLONED FROM TR9KH1330CCP-N(R6B)

GlobTek, Inc.
www.globtek.com
186 Veterans Drive,
Northvale, NJ 07647
Tel. (201) 784-1000
Fax (201) 784-0111

Drawing Title: GT-46240-2412-T2, ICT/ITE Power Supply, Efficiency Level: USA DOE Level VI / Eco-design Directive 2009/125/EC, (EU) 2019/1782, Case Color/Style: GlobTek Black, Desktop/External, Regulated Switchmode AC-DC Power Supply AC Adaptor, Input Rating: 100-240V~, 50-60 Hz, IEC 60320/C8, , Output Rating: 24.00W, 12.0V@2.0A, Pin Out: Center Positive (+V), symbol compliant with IEC 60417 symbol no. 5926, Output Configuration: 1530 mm, 18/2 Cond, UL 2468, Female Barrel 5.5*2.1*11mm WITH internal Spring Clip and Locking Notch or Equal, Ferrite: Core Size: 14.2*28.5*8.2, GlobTek Black, GT Cord # C5225, Blades/Input Cord: Not Applicable, Approvals:	
Model No. GT-46240-2412-T2	
Part No./Ordering No. TR9KE2000CCP-N(R6B)	Rev C1

OUTPUT CONNECTOR HOOK UP

TO ADDRESS SYSTEM-LEVEL EMI CONCERNS, FERRITE CHOKES/BEADS MAY BE ADDED/REVISED UPON REQUEST. A SAMPLE KIT OF GLOBTEK'S STANDARD FERRITES IS AVAILABLE UNDER GLOBTEK P/N: EMI-MITIGATION-KIT1

FOR ADDITIONAL INFORMATION, PLEASE READ OUR WHITE PAPER AT:
https://www.globtek.com/en/technical-articles/ferrite-kit-radiated-emi-suppression-kit-for-globtek-power-supplies-cable-assemblies

PROPRIETARY INFORMATION
PROPRIETARY OF GLOBTEK, INC. ANY REPRODUCTION, DISCLOSURE OR USE OF THIS DRAWING, IN WHOLE OR IN PART, IS HEREBY PROHIBITED EXCEPT AS SPECIFIED IN WRITING BY GLOBTEK, INC. © GlobTek, Inc. 2016 - 2024
guest / 05/25/2024 9:04:14 AM GMT CLONED FROM TR9KH1330CCP-N(R6B)

GlobTek, Inc.
www.globtek.com
186 Veterans Drive,
Northvale, NJ 07647
Tel. (201) 784-1000
Fax (201) 784-0111

Drawing Title: GT-46240-2412-T2, ICT/ITE Power Supply, Efficiency Level: USA DOE Level VI / Eco-design Directive 2009/125/EC, (EU) 2019/1782, Case Color/Style: GlobTek Black, Desktop/External, Regulated Switchmode AC-DC Power Supply AC Adaptor, Input Rating: 100-240V~, 50-60 Hz, IEC 60320/C8, , Output Rating: 24.00W, 12.0V@2.0A, Pin Out: Center Positive (+V), symbol compliant with IEC 60417 symbol no. 5926, Output Configuration: 1530 mm, 18/2 Cond, UL 2468, Female Barrel 5.5*2.1*11mm WITH internal Spring Clip and Locking Notch or Equal, Ferrite: Core Size: 14.2*28.5*8.2, GlobTek Black, GT Cord # C5225, Blades/Input Cord: Not Applicable, Approvals:	
Model No. GT-46240-2412-T2	
Part No./Ordering No. TR9KE2000CCP-N(R6B)	Rev C1

LABEL:L-1186

LABEL P/N	Standard GT
MATERIAL	Flat Thermal Transfer, Imprintable, Polyester Label and/or Pad Printed and/or Molded, and/or Laser Engraved in the case
BACKGROUND COLOR	Black if housing is Black, White or Silver if housing is White or Gray.
TEXT COLOR	White or Silver if label is Black Background for Black housing. Black if label is White or Silver background and Housing is White or Gray.
LABEL WIDTH (mm)	39.6
LABEL HEIGHT (mm)	59.6
SPECIAL BARCODE LABEL MATERIAL	No

Below is the minimum information which will appear on the label. NOTE: in the logo area additional/actual positioning of symbols and text is subjected to change as per agency updates/requirements or additional model approvals become available.
Regulatory certifications/label markings may be in logo area on the label or molded into the case housing outside the label area.
Information will be shown via label and/or pad printed and/or molded and/or laser engraved in the case. * Date code markings at GlobTek option
.

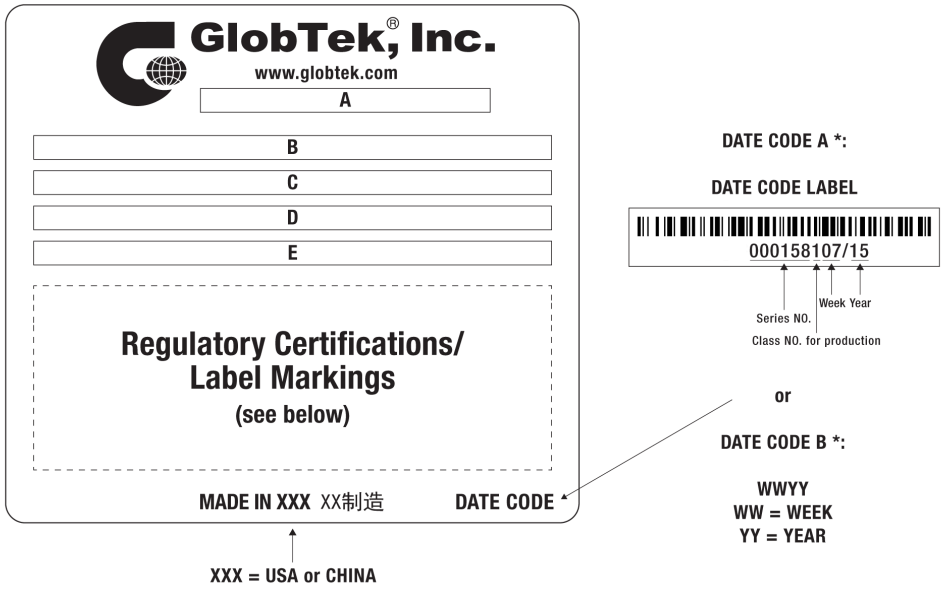

A=ICT/ITE Power Supply
B=P/N: (料号) TR9KE2000CCP-N(R6B)
C=Model (型号) GT-46240-2412-T2
D=Input (输入)100-240V~, 50-60 Hz, 0.6 A
E=Output (输出)12.0 V ⎓ 2.0 A, 24.00W

PROPRIETARY INFORMATION
PROPRIETARY OF GLOBTEK, INC. ANY REPRODUCTION, DISCLOSURE OR USE OF THIS DRAWING, IN WHOLE OR IN PART, IS HEREBY PROHIBITED EXCEPT AS SPECIFIED IN WRITING BY GLOBTEK, INC. © GlobTek, Inc. 2016 - 2024
guest / 05/25/2024 9:04:14 AM GMT CLONED FROM TR9KH1330CCP-N(R6B)

AGENCY ONLINE DOCUMENTS	http://www.globtek.info/certs/GT-46240-24VV-x.x-TZ/
CE EC-Declaration for Medical	Contact GlobTek for more information
CE EC-Declaration for Industrial/Commercial/ITE	https://cs.globtek.info/ec_declaration_product?id=01ta0000005yKGt&i=2
CE EC-Declaration for Household	Contact GlobTek for more information
UKCA-Declaration for Medical	Contact GlobTek for more information
UKCA-Declaration for Industrial/Commercial/ITE	https://cs.globtek.info/ukca_declaration_product?id=01ta0000005yKGt&i=2
UKCA-Declaration for Household	Contact GlobTek for more information
Morocco SDoC Declaration	https://cs.globtek.info/Morocco_SDoC_Declaration?id=a0Oa000000MnJ4QEAV
RoHS/RoHS3 Declaration	https://www.globtek.com/pdf/rohs_cert/01ta0000005yKGtAAM
REACH Declaration	https://www.globtek.com/pdf/iso_certificates/REACH.pdf
Conflict Minerals Declaration	https://www.globtek.com/pdf/conflict-minerals.pdf
Prop 65 Statement	https://www.globtek.com/prop-65-statement.pdf

IPXY rating is based on 3rd party testing and customers should check suitability and test system level IPXY rating before ordering.

Regulatory Certifications/Label Markings

Below follows a link to the latest regulatory certifications and marks for this specific product. National standards as well as certification schemes are constantly changing and so is the set of certification marks and symbols applicable to this product. Various standards, marks and symbols, and certificates are subject to change at any time without notice.

Additional standards or unique country certifications are available upon request. Please contact Globtek to request a quotation.

LATEST PRODUCT/MODEL CERTIFICATIONS:	https://www.globtek.com/ds/f9NxxHvz6Rx/YdfFsYdYm9h.html
AGENCY ONLINE DOCUMENTS	http://www.globtek.info/certs/GT-46240-24VV-x.x-TZ/



(F1) Floating output, Class II / double insulated

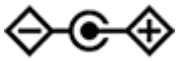

Center Positive (+V), symbol compliant with IEC 60417 symbol no. 5926

PROPRIETARY INFORMATION

PROPRIETARY OF GLOBTEK, INC. ANY REPRODUCTION, DISCLOSURE OR USE OF THIS DRAWING, IN WHOLE OR IN PART, IS HEREBY PROHIBITED EXCEPT AS SPECIFIED IN WRITING BY GLOBTEK, INC. © GlobTek, Inc. 2016 - 2024

guest / 05/25/2024 9:04:14 AM GMT CLONED FROM TR9KH1330CCP-N(R6B)

PACKAGING

Packing Spec P/N	Standard DT, Individually Box, GT User Manual
Box Qty	72
Gift Box Size (mm)	125*58*60
Gift Box Color	White
Master Carton Size (mm)	520 x 370 x 205
Master Carton Cubic Volume (m^3)	0.04
Master GW (Kg)	8.4 kg
BLADES INCLUDED	N/A: Not Applicable
BLADE/CORD INSTALLED	N/A: Not Applicable
USER MANUAL*	809-DESKTOPUSERMANUAL on A4 paper
USER MANUAL WEB LINK	https://www.globtek.com/pdf/809-DESKTOPUSERMANUAL.jpg

* This specification sheet is considered the user manual for all applications. It is expected that the buyer of this product will use it to formulate their own user manual for their end product and a user manual specifically for the power adapter is not usually required. If a user manual is not specifically listed above then none will be provided with this unit.

If specific packaging is required, this section must specify all requirements and note “no exceptions”. If this section does not specify packaging, it is subject to change without notice at GlobTek’s discretion

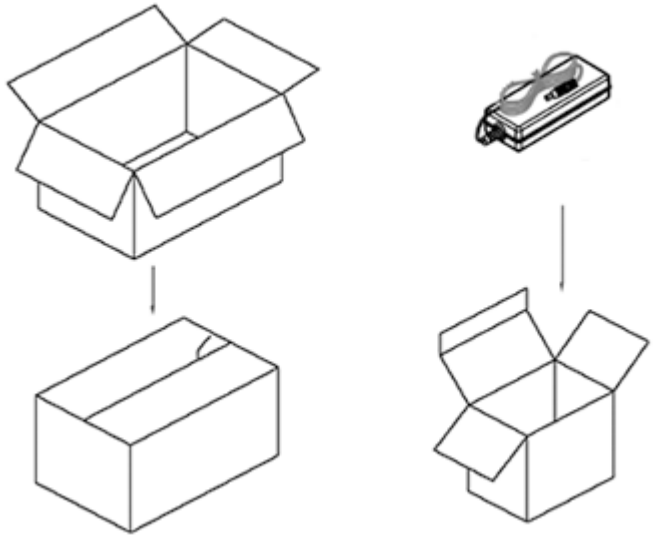

PROPRIETARY INFORMATION

PROPRIETARY OF GLOBTEK, INC. ANY REPRODUCTION, DISCLOSURE OR USE OF THIS DRAWING, IN WHOLE OR IN PART, IS HEREBY PROHIBITED EXCEPT AS SPECIFIED IN WRITING BY GLOBTEK, INC. © GlobTek, Inc. 2016 - 2024

guest / 05/25/2024 9:04:14 AM GMT CLONED FROM TR9KH1330CCP-N(R6B)

INSTRUCTIONS TO THE OEM SYSTEMS ENGINEER

It is the responsibility of the OEM systems engineer to provide the end system user instructions and warnings for the use of this product in the end system.

If an input cord is required for this product, AC Mains voltage should be provided to the power supply by a power supply cord approved to the national standards of the country in which it will be used.

This product is not designed to be repaired. No serviceable parts inside. A blown internal fuse is an indication of catastrophic failure of circuit component(s). If a Failure Analysis is required for a failed power supply/battery charger, please return the damaged unit to GlobTek for an accurate determination of the root cause of the failure.

EMC Compliance of the complete OEM product, including the GlobTek power supply/battery charger needs to be verified by the OEM systems engineer.

PROPRIETARY INFORMATION

PROPRIETARY OF GLOBTEK, INC. ANY REPRODUCTION, DISCLOSURE OR USE OF THIS DRAWING, IN WHOLE OR IN PART, IS HEREBY PROHIBITED EXCEPT AS SPECIFIED IN WRITING BY GLOBTEK, INC. © GlobTek, Inc. 2016 - 2024

guest / 05/25/2024 9:04:14 AM GMT CLONED FROM TR9KH1330CCP-N(R6B)

GlobTek, Inc.
www.globtek.com
186 Veterans Drive,
Northvale, NJ 07647
Tel. (201) 784-1000
Fax (201) 784-0111

Drawing Title: GT-46240-2412-T2, ICT/ITE Power Supply, Efficiency Level: USA DOE Level VI / Eco-design Directive 2009/125/EC, (EU) 2019/1782, Case Color/Style: GlobTek Black, Desktop/External, Regulated Switchmode AC-DC Power Supply AC Adaptor, Input Rating: 100-240V~, 50-60 Hz, IEC 60320/C8, , Output Rating: 24.00W, 12.0V@2.0A, Pin Out: Center Positive (+V), symbol compliant with IEC 60417 symbol no. 5926, Output Configuration: 1530 mm, 18/2 Cond, UL 2468, Female Barrel 5.5*2.1*11mm WITH internal Spring Clip and Locking Notch or Equal, Ferrite: Core Size: 14.2*28.5*8.2, GlobTek Black, GT Cord # C5225, Blades/Input Cord: Not Applicable, Approvals:	
Model No. GT-46240-2412-T2	
Part No./Ordering No. TR9KE2000CCP-N(R6B)	Rev C1

INSTRUCTION SHEET

N/A

PROPRIETARY INFORMATION
PROPRIETARY OF GLOBTEK, INC. ANY REPRODUCTION, DISCLOSURE OR USE OF THIS DRAWING, IN WHOLE OR IN PART, IS HEREBY PROHIBITED EXCEPT AS SPECIFIED IN WRITING BY GLOBTEK, INC. © GlobTek, Inc. 2016 - 2024
guest / 05/25/2024 9:04:14 AM GMT CLONED FROM TR9KH1330CCP-N(R6B)

GlobTek, Inc.
www.globtek.com
186 Veterans Drive,
Northvale, NJ 07647
Tel. (201) 784-1000
Fax (201) 784-0111

Drawing Title: GT-46240-2412-T2, ICT/ITE Power Supply, Efficiency Level: USA DOE Level VI / Eco-design Directive 2009/125/EC, (EU) 2019/1782, Case Color/Style: GlobTek Black, Desktop/External, Regulated Switchmode AC-DC Power Supply AC Adaptor, Input Rating: 100-240V~, 50-60 Hz, IEC 60320/C8, , Output Rating: 24.00W, 12.0V@2.0A, Pin Out: Center Positive (+V), symbol compliant with IEC 60417 symbol no. 5926, Output Configuration: 1530 mm, 18/2 Cond, UL 2468, Female Barrel 5.5*2.1*11mm WITH internal Spring Clip and Locking Notch or Equal, Ferrite: Core Size: 14.2*28.5*8.2, GlobTek Black, GT Cord # C5225, Blades/Input Cord: Not Applicable, Approvals:	
Model No. GT-46240-2412-T2	
Part No./Ordering No. TR9KE2000CCP-N(R6B)	Rev C1

PROPRIETARY INFORMATION
PROPRIETARY OF GLOBTEK, INC. ANY REPRODUCTION, DISCLOSURE OR USE OF THIS DRAWING, IN WHOLE OR IN PART, IS HEREBY PROHIBITED EXCEPT AS SPECIFIED IN WRITING BY GLOBTEK, INC. © GlobTek, Inc. 2016 - 2024
guest / 05/25/2024 9:04:14 AM GMT CLONED FROM TR9KH1330CCP-N(R6B)