DMCV 1,5/10-G1-3,5 P35 - PCB header

1053851

https://www.phoenixcontact.com/us/products/1053851

Please be informed that the data shown in this PDF document is generated from our online catalog. Please find the complete data in the user documentation. Our general terms of use for downloads are valid.

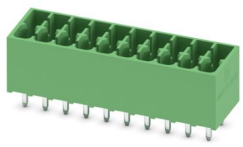

PCB headers, nominal cross section: 1.5 mm^2, color: green, nominal current: 8 A, rated voltage (III/2): 160 V, contact surface: Tin, contact connection type: Pin, number of potentials: 20, number of rows: 2, number of positions: 10, number of connections: 20, product range: DMCV 1,5/..-G1, pitch: 3.5 mm, mounting: Wave soldering, pin layout: Linear pinning, solder pin [P]: 3.5 mm, number of solder pins per potential: 1, plug-in system: COMBICON DFMC 1,5, Pin connector pattern alignment: Standard, locking: without, mounting: without, type of packaging: packed in cardboard

Your advantages

- Conductor connection on several levels enables higher contact density
- Small component size for applications where space is at a premium
- Vertical connection enables multi-row arrangement on the PCB
- Well-known mounting principle allows worldwide use

Commercial data

Item number	1053851
Packing unit	50 pc
Minimum order quantity	50 pc
Note	Made to order (non-returnable)
Sales key	AA02
Product key	AABSJC
GTIN	4055626687650
Weight per piece (including packing)	4.43 g
Weight per piece (excluding packing)	4.1 g
Customs tariff number	85366930
Country of origin	CN

Technical data

Product properties

Product type	PCB headers
Product family	DMCV 1,5/..-G1
Product line	COMBICON Connectors S
Number of positions	10
Pitch	3.5 mm
Number of connections	20
Number of rows	2
Number of potentials	20
Pin layout	Linear pinning
Solder pins per potential	1

Electrical properties

Nominal current I_N	8 A
Nominal voltage U_N	160 V
Contact resistance	2.3 mΩ
Rated voltage (III/3)	160 V
Rated surge voltage (III/3)	2.5 kV
Rated voltage (III/2)	160 V
Rated surge voltage (III/2)	2.5 kV
Rated voltage (II/2)	250 V
Rated surge voltage (II/2)	2.5 kV

Mounting

Mounting type	Wave soldering
Pin layout	Linear pinning

Material specifications

Material data - contact

Note	WEEE/RoHS-compliant, free of whiskers according to IEC 60068-2-82/JEDEC JESD 201
Contact material	Cu alloy
Surface characteristics	Tin-plated
Metal surface contact area (top layer)	Tin (4 - 8 µm Sn)
Metal surface contact area (middle layer)	Nickel (1.5 - 4 µm Ni)
Metal surface soldering area (top layer)	Tin (4 - 8 µm Sn)
Metal surface soldering area (middle layer)	Nickel (1.5 - 4 µm Ni)

Material data - housing

Color (Housing)	green (6021)
Insulating material	PBT
Insulating material group	IIIa

CTI according to IEC 60112	225
Flammability rating according to UL 94	V0

Dimensions

Dimensional drawing	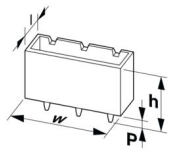
Pitch	3.5 mm
Width [w]	35.8 mm
Height [h]	13.5 mm
Length [l]	10.6 mm
Installed height	10 mm
Solder pin length [P]	3.5 mm
Pin dimensions	0.8 x 0.8 mm

PCB design

Pin spacing	5.50 mm
Hole diameter	1.2 mm

Mechanical tests

Visual inspection

Specification	IEC 60512-1-1:2002-02
Result	Test passed

Dimension check

Specification	IEC 60512-1-2:2002-02
Result	Test passed

Resistance of inscriptions

Specification	IEC 60068-2-70:1995-12
Result	Test passed

Polarization and coding

Specification	IEC 60512-13-5:2006-02
Result	Test passed

Contact holder in insert

Specification	IEC 60512-15-1:2008-05
Contact holder in insert Requirements >20 N	Test passed

Insertion and withdrawal forces

Result	Test passed
No. of cycles	25

Insertion strength per pos. approx.	3 N
Withdraw strength per pos. approx.	2 N

Electrical tests

Thermal test | Test group C

Specification	IEC 60512-5-1:2002-02
Tested number of positions	20

Air clearances and creepage distances |

Specification	IEC 60664-1:2007-04
Insulating material group	IIIa
Comparative tracking index (IEC 60112)	CTI 225
Rated insulation voltage (III/3)	160 V
Rated surge voltage (III/3)	2.5 kV
minimum clearance value - non-homogenous field (III/3)	1.5 mm
minimum creepage distance (III/3)	2.5 mm
Rated insulation voltage (III/2)	160 V
Rated surge voltage (III/2)	2.5 kV
minimum clearance value - non-homogenous field (III/2)	1.5 mm
minimum creepage distance (III/2)	1.6 mm
Rated insulation voltage (II/2)	250 V
Rated surge voltage (II/2)	2.5 kV
minimum clearance value - non-homogenous field (II/2)	1.5 mm
minimum creepage distance (II/2)	2.5 mm

Environmental and real-life conditions

Vibration test

Specification	IEC 60068-2-6:2007-12
Frequency	10 - 150 - 10 Hz
Sweep speed	1 octave/min
Amplitude	0.35 mm (10 Hz ... 60.1 Hz)
Acceleration	5g (60.1 Hz ... 150 Hz)
Test duration per axis	2.5 h

Durability test

Specification	IEC 60512-9-1:2010-03
Impulse withstand voltage at sea level	2.95 kV
Contact resistance R_1	2.3 mΩ
Contact resistance R_2	2.6 mΩ
Insertion/withdrawal cycles	25

Climatic test

Specification	ISO 6988:1985-02
Corrosive stress	0.2 dm^3 SO_2 on 300 dm^3/40 °C/1 cycle

Thermal stress	105 °C/168 h
Power-frequency withstand voltage	1.39 kV

Ambient conditions

Ambient temperature (operation)	-40 °C ... 100 °C (dependent on the derating curve)
Ambient temperature (storage/transport)	-40 °C ... 70 °C
Relative humidity (storage/transport)	30 % ... 70 %
Ambient temperature (assembly)	-5 °C ... 100 °C

Packaging specifications

Type of packaging	packed in cardboard

Drawings

Schematic diagram

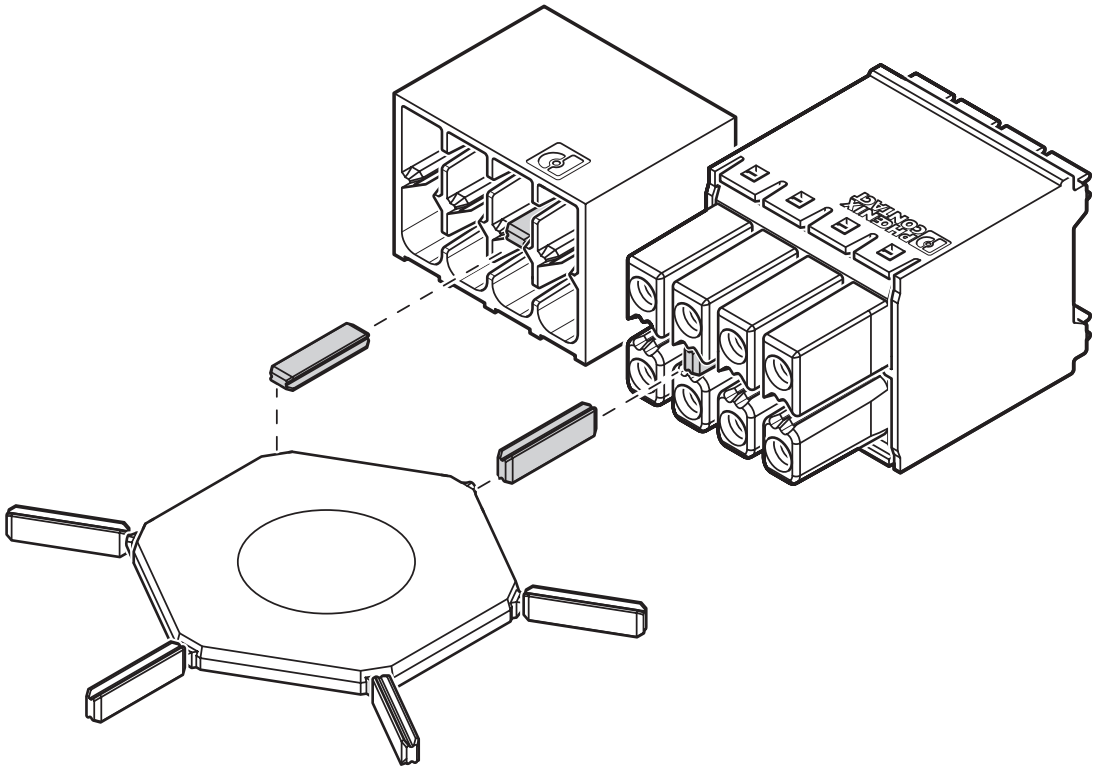

Use of the CP-DMC... coding profile

Diagram

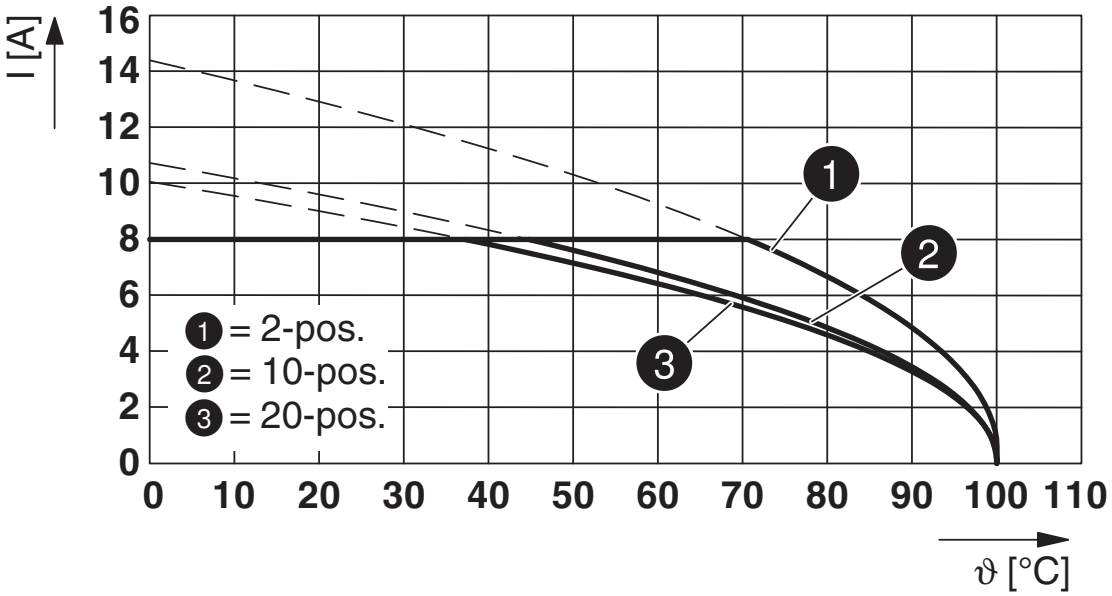

Type: DFMC 1,5/...-ST-3,5 with DMCV 1,5/...-G1-3,5 P35

Approvals

To download certificates, visit the product detail page: https://www.phoenixcontact.com/us/products/1053851

cULus Recognized
Approval ID: E60425-20110128

	Nominal voltage U_N	Nominal current I_N	Cross section AWG	Cross section mm^2
Use group B				
	300 V	8 A	-	-
Use group D				
	300 V	8 A	-	-

Classifications

ECLASS

ECLASS-11.0	27460201
ECLASS-12.0	27460201
ECLASS-13.0	27460201

ETIM

ETIM 9.0	EC002637

UNSPSC

UNSPSC 21.0	39121400

Environmental product compliance

EU RoHS

Fulfills EU RoHS substance requirements	Yes, No exemptions

China RoHS

Environment friendly use period (EFUP)	EFUP-E
	No hazardous substances above the limits

EU REACH SVHC

REACH candidate substance (CAS No.)	No substance above 0.1 wt%

Accessories

CP-DMC 1,5 NAT - Coding profile

1790647

https://www.phoenixcontact.com/us/products/1790647

Coding profile, for insertion between the coding ribs of the connector and the header following the reflow soldering process, insulating material, color: natural



DFMC 1,5/10-ST-3,5 - PCB connector

1790182

https://www.phoenixcontact.com/us/products/1790182

PCB connector, nominal cross section: 1.5 mm^2, color: green, nominal current: 8 A, rated voltage (III/2): 160 V, contact surface: Tin, contact connection type: Socket, number of potentials: 20, number of rows: 2, number of positions: 10, number of connections: 20, product range: DFMC 1,5/..-ST, pitch: 3.5 mm, connection method: Push-in spring connection, conductor/PCB connection direction: 0 °, plug-in system: COMBICON DFMC 1,5, locking: without, mounting: without, type of packaging: packed in cardboard

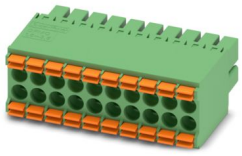

Phoenix Contact 2024 © - all rights reserved
https://www.phoenixcontact.com

Phoenix Contact USA
586 Fulling Mill Road
Middletown, PA 17057, United States
(+717) 944-1300
info@phoenixcon.com