Hybrid Conductive Polymer Aluminum Capacitors SMD (Chip), Low Impedance



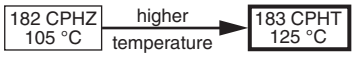

Fig. 1

FEATURES

- Long useful life: up to 4000 h at 125 °C
- Very low ESR and high ripple current
- High voltages up to 80 V
- SMD-version with base plate, lead (Pb)-free reflow solderable
- Material categorization: for definitions of compliance please see www.vishay.com/doc?99912

Pb-free

RoHS COMPLIANT

APPLICATIONS

- Industrial and professional applications
- Telecommunications and IT
- Portable and mobile equipment

MARKING

- Rated capacitance (in µF)
- Rated voltage (in V)
- Date code, in accordance with IEC 60062
- Black mark or "-" sign indicating the cathode (the anode is identified by beveled edges)
- Code indicating group number (83)

PACKAGING

Supplied in blister tape on reel

QUICK REFERENCE DATA	
DESCRIPTION	**VALUE**
Nominal case sizes (L x W x H in mm)	5.0 x 5.0 x 5.8 to 10.0 x 10.0 x 16.5
Rated capacitance range, C_R	10 µF to 330 µF
Tolerance on C_R	± 20 %
Rated voltage range, U_R	25 V to 80 V
Category temperature range	-55 °C to +125 °C
Endurance test at 125 °C	4000 h
Useful life at 125 °C	4000 h
Shelf life at 0 V, 125 °C	1000 h
Based on sectional specification	IEC 60384-25 / CECC 32300
Climatic category IEC 60068	55 / 125 / 56

SELECTION CHART FOR C_R, U_R, AND RELEVANT NOMINAL CASE SIZES (L x W x H in mm)

C_R (µF)	U_R (V)				
	25	**35**	**50**	**63**	**80**
10	→	→	5.0 x 5.0 x 5.8	6.3 x 6.3 x 5.8	-
22	→	5.0 x 5.0 x 5.8	6.3 x 6.3 x 5.8	6.3 x 6.3 x 7.7	8.0 x 8.0 x 10.5
33	5.0 x 5.0 x 5.8	→	6.3 x 6.3 x 7.7	8.0 x 8.0 x 10.5	10.0 x 10.0 x 10.5
47	→	6.3 x 6.3 x 5.8	→	→	10.0 x 10.0 x 10.5
56	6.3 x 6.3 x 5.8	→	→	10.0 x 10.0 x 10.5	-
68	→	6.3 x 6.3 x 7.7	8.0 x 8.0 x 10.5	10.0 x 10.0 x 10.5	-
100	6.3 x 6.3 x 7.7	→	10.0 x 10.0 x 10.5	-	-
120	→	→	10.0 x 10.0 x 10.5	-	-
150	→	8.0 x 8.0 x 10.5	-	10.0 x 10.0 x 16.5	-
220	8.0 x 8.0 x 10.5	-	-	-	-
270	→	10.0 x 10.0 x 10.5	-	-	-
330	10.0 x 10.0 x 10.5	-	-	-	-

For technical questions, contact: aluminumcaps1@vishay.com

THIS DOCUMENT IS SUBJECT TO CHANGE WITHOUT NOTICE. THE PRODUCTS DESCRIBED HEREIN AND THIS DOCUMENT ARE SUBJECT TO SPECIFIC DISCLAIMERS, SET FORTH AT www.vishay.com/doc?91000

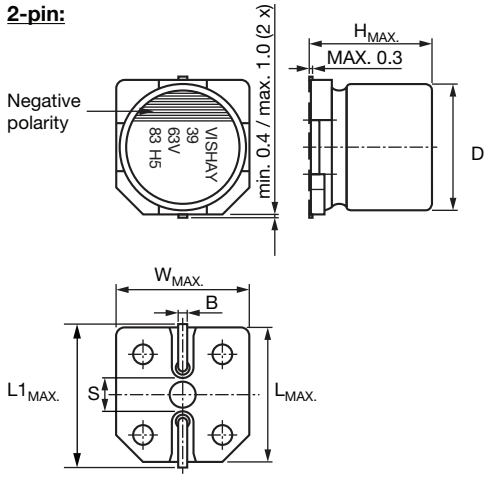

Fig. 2 - Dimensional outline

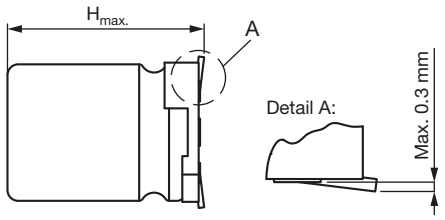

Fig. 3 - Coplanarity of pins

Table 1

DIMENSIONS in millimeters **AND MASS**									
NOMINAL CASE SIZE L x W x H	**CASE CODE**	**$L_{MAX.}$**	**$W_{MAX.}$**	**$H_{MAX.}$**	**Ø D**	**$B_{MAX.}$**	**S**	**$L1_{MAX.}$**	**MASS (g)**
5.0 x 5.0 x 5.8	0506	5.5	5.5	6.1	5.0	0.8	1.4	6.1	0.2
6.3 x 6.3 x 5.8	0606	6.8	6.8	6.1	6.3	0.8	2.2	7.4	0.3
6.3 x 6.3 x 7.7	0608	6.8	6.8	8.0	6.3	0.8	2.2	7.4	0.4
8.0 x 8.0 x 10.5	0810	8.5	8.5	10.8	8.0	1.1	3.1	9.2	0.9
10.0 x 10.0 x 10.5	1010	10.5	10.5	10.8	10.0	1.1	4.5	11.2	1.2
10.0 x 10.0 x 16.5	1016	10.5	10.5	16.8	10.0	1.4	4.5	11.2	1.8

Table 2

TAPE AND REEL DIMENSIONS in millimeters, **PACKAGING QUANTITIES**						
NOMINAL CASE SIZE L x W x H	**CASE CODE**	**PITCH P_1**	**TAPE WIDTH W**	**TAPE THICKNESS T_2**	**REEL DIAMETER**	**PACKAGING QUANTITY PER REEL**
5.0 x 5.0 x 5.8	0506	12	12	6.1	380	1000
6.3 x 6.3 x 5.8	0606	12	16	5.7	380	1000
6.3 x 6.3 x 7.7	0608	12	16	8.0	380	900
8.0 x 8.0 x 10.5	0810	16	24	11.0	380	500
10.0 x 10.0 x 10.5	1010	16	24	11.0	380	500
10.0 x 10.0 x 16.5	1016	16	24	17.5	380	250

MOUNTING

The capacitors are designed for automatic placement on to printed-circuit boards.

Optimum dimensions of soldering pads depend amongst others on soldering method, mounting accuracy, print layout and / or adjacent components.

For recommended soldering pad dimensions, refer to Fig. 4 and Table 3.

SOLDERING

Soldering conditions are defined by the curve, temperature versus time, where the temperature is that measured on the component during processing.

For maximum conditions refer to Fig. 5.

Any temperature versus time curve which does not exceed the specified maximum curves may be applied.

As a general principle, temperature and duration shall be the **minimum** necessary required to ensure good soldering connections. However, the specified maximum curves should never be exceeded.

For technical questions, contact: aluminumcaps1@vishay.com

THIS DOCUMENT IS SUBJECT TO CHANGE WITHOUT NOTICE. THE PRODUCTS DESCRIBED HEREIN AND THIS DOCUMENT ARE SUBJECT TO SPECIFIC DISCLAIMERS, SET FORTH AT www.vishay.com/doc?91000

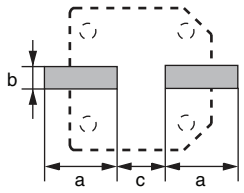

Fig. 4 - Recommended soldering pad dimensions

Table 3

RECOMMENDED SOLDERING PAD DIMENSIONS in millimeters				
NOMINAL CASE SIZE L x W x H	**CASE CODE**	**a**	**b**	**c**
5.0 x 5.0 x 5.8	0506	3.0	1.6	1.4
6.3 x 6.3 x 5.8	0606	3.5	1.6	2.1
6.3 x 6.3 x 7.7	0608	3.5	1.6	2.1
8.0 x 8.0 x 10.5	0810	4.2	1.9	2.8
10.0 x 10.0 x 10.5	1010	4.4	1.9	4.3
10.0 x 10.0 x 16.5	1016	4.4	2.2	4.3

SOLDERING PROFILE FOR LEAD (Pb)-FREE REFLOW PROCESS

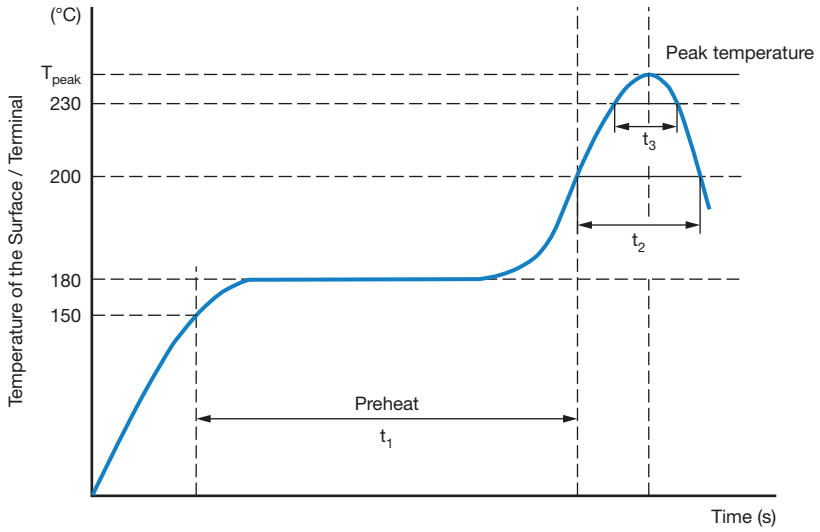

Fig. 5 - Maximum temperature load during reflow soldering

Table 4

REFLOW SOLDERING CONDITIONS for MAL2183xxxxxE3			
PROFILE FEATURES	**Ø ≤ 6.3 mm**	**Ø ≥ 8 mm**	
Maximum time between 150 °C to 200 °C (t_1)	120 s	120 s	
Ramp up rate from 217 °C to T_{peak}	0.5 K/s to 3 K/s		
Maximum time above 200 °C (t_2)	70 s	70 s	
Maximum time above 230 °C (t_3)	30 s	30 s	
Maximum time above liquidus (217 °C)	40 s	40 s	
Peak temperature T_{Peak}	260 °C	260 °C	245 °C
Maximum reflow cycles	2	1	2
Maximum time within 5 °C below T_{peak}	5	5	10
Ramp down rate T_{peak} to 217 °C	6 K/s max.		
Time 25 °C to T_{Peak}	8 min max.		

Note

- Temperature measuring point on top of the case and on terminals

For technical questions, contact: aluminumcaps1@vishay.com
THIS DOCUMENT IS SUBJECT TO CHANGE WITHOUT NOTICE. THE PRODUCTS DESCRIBED HEREIN AND THIS DOCUMENT ARE SUBJECT TO SPECIFIC DISCLAIMERS, SET FORTH AT www.vishay.com/doc?91000

For technical questions, contact: aluminumcaps1@vishay.com
THIS DOCUMENT IS SUBJECT TO CHANGE WITHOUT NOTICE. THE PRODUCTS DESCRIBED HEREIN AND THIS DOCUMENT ARE SUBJECT TO SPECIFIC DISCLAIMERS, SET FORTH AT www.vishay.com/doc?91000

ELECTRICAL DATA	
SYMBOL	DESCRIPTION
C_R	Rated capacitance at 120 Hz, tolerance ± 20 %
I_R 125 °C	Rated RMS ripple current at 100 kHz
I_{L2}	Max. leakage current after 2 min at U_R
tan δ	Max. dissipation factor at 120 Hz
ESR	Max. ESR at 100 kHz

Note

- Unless otherwise specified, all electrical values in Table 5 apply at T_{amb} = 20 °C, P = 86 kPa to 106 kPa, RH = 45 % to 75 %

ORDERING EXAMPLE

Hybrid conductive polymer 183 CPHT series

100 µF / 25 V; ± 20 %

Nominal case size: 6.3 mm x 6.3 mm x 7.7 mm; taped on reel

Ordering code: MAL218397603E3

Table 5

ELECTRICAL DATA AND ORDERING INFORMATION							
U_R (V)	C_R (µF)	NOMINAL CASE SIZE L x W x H (mm)	I_R 125 °C 100 kHz (mA)	I_{L2} 2 min (µA)	tan δ 120 Hz	ESR 100 kHz 20 °C (mΩ)	ORDERING CODE MAL2183...
25	33	5.0 x 5.0 x 5.8	550	8.3	0.14	80	97601E3
	56	6.3 x 6.3 x 5.8	900	14	0.14	50	97602E3
	100	6.3 x 6.3 x 7.7	1400	25	0.14	30	97603E3
	220	8.0 x 8.0 x 10.5	1600	55	0.14	27	97604E3
	330	10.0 x 10.0 x 10.5	2000	82.5	0.14	20	97605E3
35	22	5.0 x 5.0 x 5.8	550	7.7	0.12	100	97001E3
	47	6.3 x 6.3 x 5.8	900	16.5	0.12	60	97002E3
	68	6.3 x 6.3 x 7.7	1400	23.8	0.12	35	97003E3
	150	8.0 x 8.0 x 10.5	1600	52.5	0.12	27	97004E3
	270	10.0 x 10.0 x 10.5	2000	94.5	0.12	20	97005E3
50	10	5.0 x 5.0 x 5.8	500	5	0.1	120	97101E3
	22	6.3 x 6.3 x 5.8	750	11	0.1	80	97102E3
	33	6.3 x 6.3 x 7.7	1100	16.5	0.1	40	97103E3
	68	8.0 x 8.0 x 10.5	1250	34	0.1	30	97104E3
	100	10.0 x 10.0 x 10.5	1600	50	0.1	28	97105E3
	120	10.0 x 10.0 x 10.5	1600	60	0.1	28	97106E3
63	10	6.3 x 6.3 x 5.8	700	6.3	0.08	120	97801E3
	22	6.3 x 6.3 x 7.7	900	13.9	0.08	80	97802E3
	33	8.0 x 8.0 x 10.5	1100	20.8	0.08	40	97803E3
	56	10.0 x 10.0 x 10.5	1400	35.3	0.08	30	97804E3
	68	10.0 x 10.0 x 10.5	1400	42.8	0.08	30	97805E3
	150	10.0 x 10.0 x 16.5	3500	94.5	0.08	15	97811E3
80	22	8.0 x 8.0 x 10.5	1050	17.6	0.08	45	97806E3
	33	10.0 x 10.0 x 10.5	1360	26.4	0.08	36	97701E3
	47	10.0 x 10.0 x 10.5	1360	37.6	0.08	36	97702E3

Table 6

ADDITIONAL ELECTRICAL DATA		
PARAMETER	CONDITIONS	VALUE
Voltage		
Surge voltage for short periods	IEC 60384-25, subclause 4.14	$U_s \leq 1.15 \times U_R$

For technical questions, contact: aluminumcaps1@vishay.com

THIS DOCUMENT IS SUBJECT TO CHANGE WITHOUT NOTICE. THE PRODUCTS DESCRIBED HEREIN AND THIS DOCUMENT ARE SUBJECT TO SPECIFIC DISCLAIMERS, SET FORTH AT www.vishay.com/doc?91000

USEFUL LIFE AND ENDURANCE

Table 7

ENDURANCE TEST AND USEFUL LIFE							
SERIES	CASE CODE	USEFUL LIFE AT 125 °C (h) [1]	ENDURANCE AT 125 °C (h)	ENDURANCE AT 105 °C (h)	ENDURANCE AT 85 °C (h)	ENDURANCE AT 75 °C (h)	ENDURANCE AT 65 °C (h)
183 CPHT	0506 to 1016	4000	4000	16 000	64 000	128 000	256 000

Note

[1] Identical with endurance for this series

Endurance can be calculated by formula below:

$$L = L_{Tmax.} \times 2^{\frac{T_{max.} - T_a}{10}}$$

L: estimated lifetime (h)

$L_{Tmax.}$: base lifetime specified at maximum operating temperature with applied DC voltage (h)

$T_{max.}$: rated maximum operating temperature (°C)

T_a: actual ambient temperature (°C)

Table 8

MULTIPLIER OF RIPPLE CURRENT (I_R) AS A FUNCTION OF FREQUENCY			
FREQUENCY (Hz)			
120	1000	10 000	≥ 100 000
I_R MULTIPLIER			
0.1	0.3	0.6	1

Table 9

TEST PROCEDURES AND REQUIREMENTS			
TEST		PROCEDURE (quick reference)	REQUIREMENTS
NAME OF TEST	REFERENCE		
Mounting	IEC 60384-25, subclause 4.3	Shall be performed prior to tests mentioned below; reflow soldering; for maximum temperature load refer to chapter “Mounting”	ΔC/C: ± 5 % tan δ ≤ spec. limit I_{L2} ≤ spec. limit
Endurance	IEC 60384-25 / CECC 32300, subclause 4.15	T_{amb} = 125 °C; U_R applied; for test duration see Table 7	ΔC/C: ± 30 % tan δ ≤ 2 x spec. limit I_{L2} ≤ spec. limit ESR ≤ 2 x spec. limit
Useful life	CECC 30301, subclause 1.8.1	T_{amb} = 125 °C; U_R and I_R applied; for test duration see Table 7	ΔC/C: ± 30 % tan δ ≤ 2 x spec. limit I_{L2} ≤ spec. limit ESR ≤ 2 x spec. limit
Shelf life (storage at high temperature)	IEC 60384-25 / CECC 32300, subclause 4.16	T_{amb} = 125 °C; no voltage applied; 1000 h after test: U_R to be applied for 30 min, 24 h to 48 h before measurement	For requirements see “Endurance test” above

Statements about product lifetime are based on calculations and internal testing. They should only be interpreted as estimations. Also due to external factors, the lifetime in the field application may deviate from the calculated lifetime. In general, nothing stated herein shall be construed as a guarantee of durability.

For technical questions, contact: aluminumcaps1@vishay.com
THIS DOCUMENT IS SUBJECT TO CHANGE WITHOUT NOTICE. THE PRODUCTS DESCRIBED HEREIN AND THIS DOCUMENT ARE SUBJECT TO SPECIFIC DISCLAIMERS, SET FORTH AT www.vishay.com/doc?91000

Disclaimer

ALL PRODUCT, PRODUCT SPECIFICATIONS AND DATA ARE SUBJECT TO CHANGE WITHOUT NOTICE TO IMPROVE RELIABILITY, FUNCTION OR DESIGN OR OTHERWISE.

Vishay Intertechnology, Inc., its affiliates, agents, and employees, and all persons acting on its or their behalf (collectively, “Vishay”), disclaim any and all liability for any errors, inaccuracies or incompleteness contained in any datasheet or in any other disclosure relating to any product.

Vishay makes no warranty, representation or guarantee regarding the suitability of the products for any particular purpose or the continuing production of any product. To the maximum extent permitted by applicable law, Vishay disclaims (i) any and all liability arising out of the application or use of any product, (ii) any and all liability, including without limitation special, consequential or incidental damages, and (iii) any and all implied warranties, including warranties of fitness for particular purpose, non-infringement and merchantability.

Statements regarding the suitability of products for certain types of applications are based on Vishay's knowledge of typical requirements that are often placed on Vishay products in generic applications. Such statements are not binding statements about the suitability of products for a particular application. It is the customer's responsibility to validate that a particular product with the properties described in the product specification is suitable for use in a particular application. Parameters provided in datasheets and / or specifications may vary in different applications and performance may vary over time. All operating parameters, including typical parameters, must be validated for each customer application by the customer's technical experts. Product specifications do not expand or otherwise modify Vishay's terms and conditions of purchase, including but not limited to the warranty expressed therein.

Hyperlinks included in this datasheet may direct users to third-party websites. These links are provided as a convenience and for informational purposes only. Inclusion of these hyperlinks does not constitute an endorsement or an approval by Vishay of any of the products, services or opinions of the corporation, organization or individual associated with the third-party website. Vishay disclaims any and all liability and bears no responsibility for the accuracy, legality or content of the third-party website or for that of subsequent links.

Except as expressly indicated in writing, Vishay products are not designed for use in medical, life-saving, or life-sustaining applications or for any other application in which the failure of the Vishay product could result in personal injury or death. Customers using or selling Vishay products not expressly indicated for use in such applications do so at their own risk. Please contact authorized Vishay personnel to obtain written terms and conditions regarding products designed for such applications.

No license, express or implied, by estoppel or otherwise, to any intellectual property rights is granted by this document or by any conduct of Vishay. Product names and markings noted herein may be trademarks of their respective owners.

© 2024 VISHAY INTERTECHNOLOGY, INC. ALL RIGHTS RESERVED