The Future of Analog IC Technology®

MP2108

2A, 6V, 740KHz Synchronous Buck Converter

DESCRIPTION

The MP2108 is a 2A, 740KHz synchronous buck converter designed for low voltage applications requiring high efficiency. It is capable of providing output voltages as low as 0.9V, and integrates top and bottom switches to minimize power loss and component count. The 740KHz switching frequency allows for small filtering components, further reducing the solution size.

The MP2108 includes cycle-by-cycle current limiting and under voltage lockout. Internal power switches, combined with the tiny 10-pin MSOP or 3mm x 3mm QFN packages, provide a solution requiring a minimum of board space. QFN package is recommended if output current is higher than 1.5A.

EVALUATION BOARD REFERENCE

Board Number	Dimensions
EV2108DQ/DK-00A	2.5"X x 2.0"Y x 0.5"Z

FEATURES

- 2A Output Current
- Synchronous Rectification
- Internal 160mΩ and 190mΩ Power Switches
- Input Range of 2.6V to 6V
- Over 95% Efficiency
- Under Voltage Lockout Protection
- Soft-Start Operation
- Thermal Shutdown
- Internal Current Limit (Source & Sink)
- Tiny 10-Pin MSOP and 3x3 QFN Packages

APPLICATIONS

- SOHO Routers, PCMCIA Cards, Mini PCI
- Handheld Computers, PDAs
- Cell phones, Digital Still and Video Cameras
- Small LCD Displays

"MPS" and "The Future of Analog IC Technology" are Registered Trademarks of Monolithic Power Systems, Inc.

NOT RECOMMENDED FOR NEW DESIGNS REFER TO MP2182

TYPICAL APPLICATION

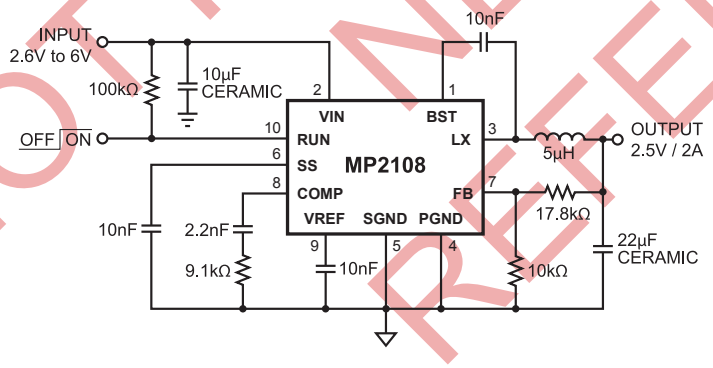

Efficiency vs Load Current

(V_{IN} = 3.3, L=5µH)

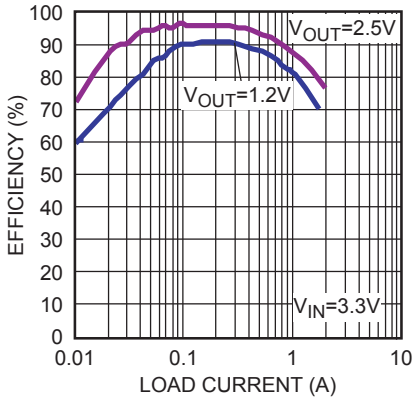

MPS Proprietary Information. Unauthorized Photocopy and Duplication Prohibited.
© 2020 MPS. All Rights Reserved.

PACKAGE REFERENCE

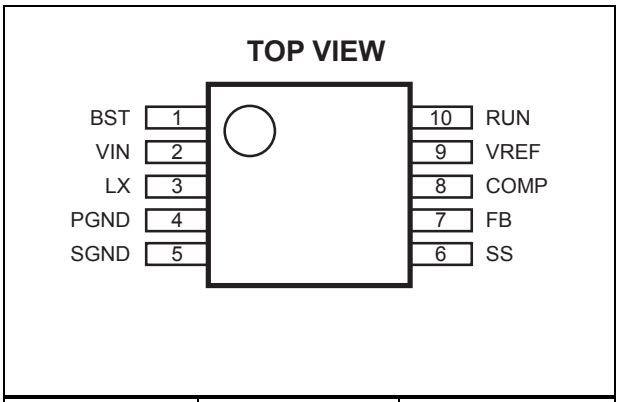

Part Number*	Package	Temperature
MP2108DK	MSOP10	–40°C to +85°C

* For Tape & Reel, add suffix –Z (eg. MP2108DK–Z)
For RoHS compliant packaging, add suffix –LF (eg. MP2108DK–LF–Z)

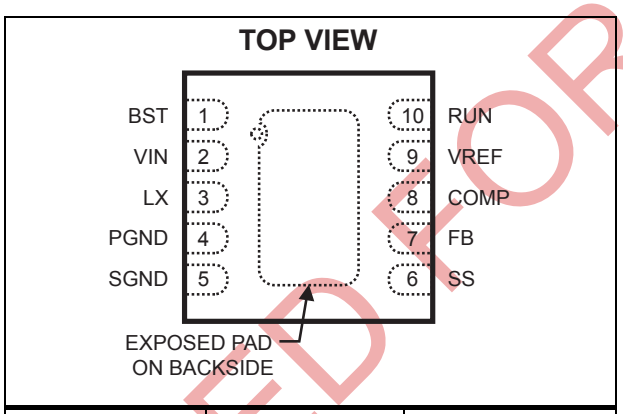

Part Number**	Package***	Temperature
MP2108DQ	QFN10 (3mm x 3mm)	–40°C to +85°C

** For Tape & Reel, add suffix –Z (eg. MP2108DQ–Z)
For RoHS compliant packaging, add suffix –LF (eg. MP2108DQ–LF–Z)
*** Recommended for output currents higher than 1.5A

ABSOLUTE MAXIMUM RATINGS (1)

Input Supply Voltage V_{IN} 6.5V
LX Voltage V_{LX} .....–0.3V to V_{IN} + 0.3V
BST to LX Voltage ..... –0.3V to +6V
Voltage on All Other Pins..... –0.3V to +6V
Storage Temperature.....–55°C to +150°C

Recommended Operating Conditions (2)

Input Supply Voltage V_{IN} .....2.6V to 6
Output Voltage V_{OUT}..... 0.9V to 5V
Operating Temperature .....–40°C to +85°C

Thermal Resistance (3)

	θ_{JA}	θ_{JC}	
MSOP10	150	65	°C/W
QFN10 (3mm x 3mm)	50	12	°C/W

Notes:
1) Exceeding these ratings may damage the device.
2) The device is not guaranteed to function outside of its operating conditions.
3) Measured on approximately 1" square of 1 oz copper.

ELECTRICAL CHARACTERISTICS

V_{IN} = 5.0V, T_A = +25°C, unless otherwise noted.

Parameter	Symbol	Condition	Min	Typ	Max	Units
Input Voltage Range	V_{IN}		2.6		6	V
Input Undervoltage Lockout				2.2		V
Input Undervoltage Lockout Hysteresis				100		mV
Shutdown Supply Current		V_{RUN} ≤ 0.3V		0.5	1.0	μA
Operating Supply Current		V_{RUN} > 2V, V_{FB} = 1.1V		1.2	1.8	mA
VREF Voltage	V_{REF}	V_{IN} = 2.6V to 6V		2.4		V
RUN Input Low Voltage	V_{IL}				0.4	V
RUN Input High Voltage	V_{HL}		1.5			V
RUN Hysteresis				100		mV
RUN Input Bias Current					1	μA

NOT RECOMMENDED FOR NEW DESIGNS REFER TO MP2182

MPS Proprietary Information. Unauthorized Photocopy and Duplication Prohibited.
© 2020 MPS. All Rights Reserved.

ELECTRICAL CHARACTERISTICS *(continued)*

V_{IN} = 5.0V, T_A = +25°C, unless otherwise noted.

Parameter	Symbol	Condition	Min	Typ	Max	Units
Oscillator						
Switching Frequency	f_{SW}		620	740	920	KHz
Maximum Duty Cycle	D_{MAX}	V_{FB} = 0.7V	85			%
Minimum On Time	T_{ON}			200		ns
Error Amplifier						
Voltage Gain	A_{VEA}			400		V/V
Transconductance	G_{EA}			450		μA/V
COMP Maximum Output Current				±40		μA
FB Regulation Voltage	V_{FB}		875	895	915	mV
FB Input Bias Current	I_{FB}	V_{FB} = 0.9V		–100		nA
Soft-Start						
Soft-Start Current	I_{SS}			2		μA
Output Switch On-Resistance						
Switch On Resistance		V_{IN} = 5V		190		mΩ
		V_{IN} = 3V		280		mΩ
Synchronous Rectifier On Resistance		V_{IN} = 5V		160		mΩ
		V_{IN} = 3V		230		mΩ
Switch Current Limit (Source)			2.5	3.5		A
Synchronous Rectifier Current Limit (Sink)				350		mA
Thermal Shutdown				160		°C

PIN FUNCTIONS

Pin #	Name	Description
1	BST	Power Switch Boost. BST powers the gate of the high-side N-Channel power MOSFET switch. Connect a 10nF or greater capacitor between BST and LX.
2	VIN	Internal Power Input. VIN supplies the power to the MP2108 through the internal LDO regulator. Bypass VIN to PGND with a 10μF or greater capacitor. Connect VIN to the input source voltage.
3	LX	Output Switching Node. LX is the source of the high-side N-Channel switch and the drain of the low-side N-Channel switch. Connect the output LC filter between LX and the output.
4	PGND	Power Ground. PGND is the source of the N-Channel MOSFET synchronous rectifier. Connect PGND to SGND as close to the MP2108 as possible.
5	SGND	Signal Ground.
6	SS	Soft-Start Input. Place a capacitor from SS to SGND to set the soft-start period. The MP2108 sources 2μA from SS to the soft-start capacitor at start-up. As the voltage at SS rises, the feedback threshold voltage increases to limit inrush current at startup.
7	FB	Feedback Input. FB is the inverting input of the internal error amplifier. Connect a resistive voltage divider from the output voltage to FB to set the output voltage.
8	COMP	Compensation Node. COMP is the output of the error amplifier. Connect a series RC network to compensate the regulation control loop.
9	VREF	Internal 2.4V Regulator Bypass. Connect a 10nF capacitor between VREF and SGND to bypass the internal regulator. Do not apply any load to VREF.
10	RUN	On/Off Control Input. Drive RUN high to turn on the MP2108, drive RUN low to turn the MP2108 off. For automatic startup, connect RUN to VIN via a 100kΩ pull-up resistor.

NOT RECOMMENDED FOR NEW DESIGNS REFER TO MP2182

MPS Proprietary Information. Unauthorized Photocopy and Duplication Prohibited.
© 2020 MPS. All Rights Reserved.

TYPICAL PERFORMANCE CHARACTERISTICS

Circuit of Figure 2, V_{IN} = 5V, V_{OUT} = 2.5V, L1 = 5μH, C1 = 10μF, C2 = 22μF, T_A = +25°C, unless otherwise noted.

Efficiency vs Load Current

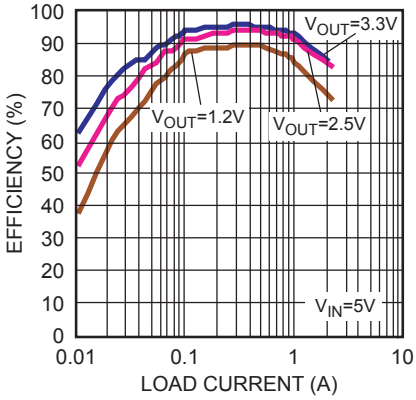

Peak Current vs Duty Cycle

Feedback Voltage vs Die Temperature

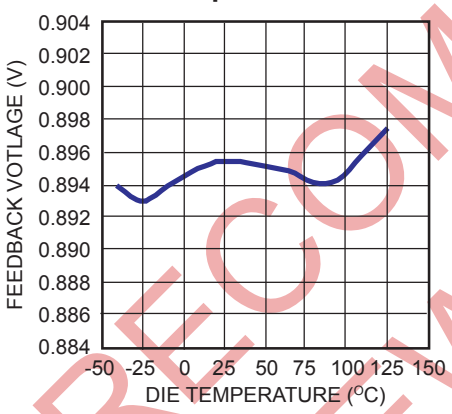

Switching Frequency vs Die Temperature

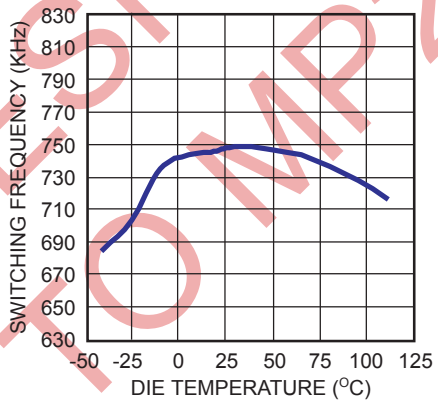

NOT RECOMMENDED FOR NEW DESIGNS REFER TO MP2182

MPS Proprietary Information. Unauthorized Photocopy and Duplication Prohibited.
© 2020 MPS. All Rights Reserved.

TYPICAL PERFORMANCE CHARACTERISTICS *(continued)*

Circuit of Figure 2, V_{IN} = 5V, V_{OUT} = 2.5V, L1 = 5μH, C1 = 10μF, C2 = 22μF, T_A = +25°C, unless otherwise noted.

Steady State Operation
No Load

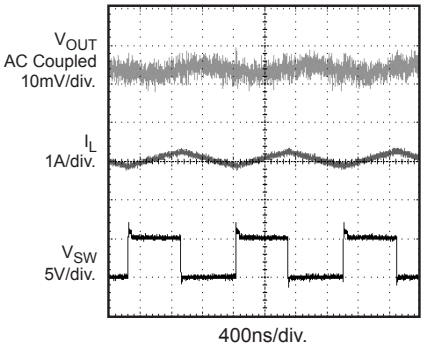

Steady State Operation
Full Load

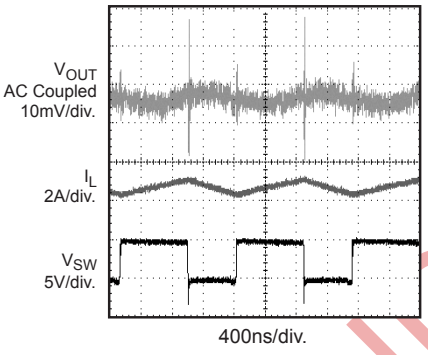

Load Transient
0.5A-1A Step Resistive Load

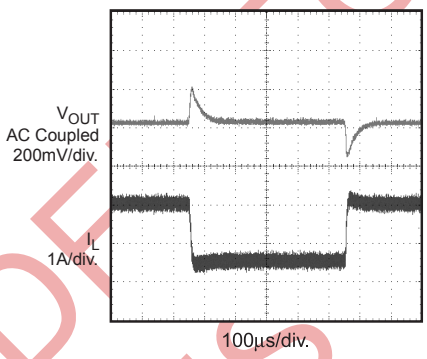

Start-up through Enable
No Load

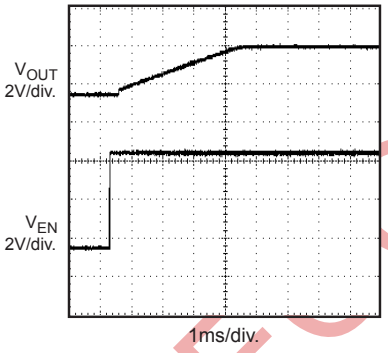

Start-up through Enable
Full Load

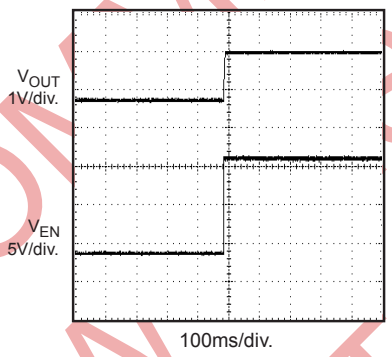

Shut-down through Enable
No Load

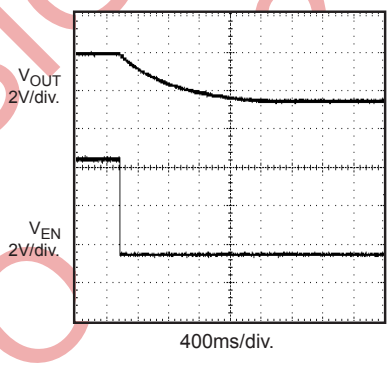

Shut-down through Enable
Full Load

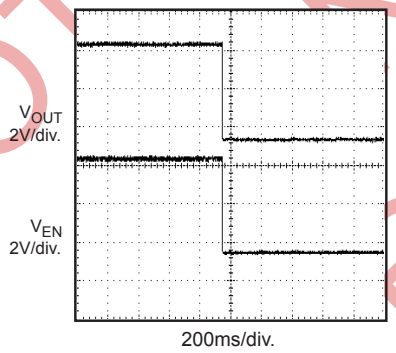

NOT RECOMMENDED FOR NEW DESIGNS REFER TO 2182

MPS Proprietary Information. Unauthorized Photocopy and Duplication Prohibited.
© 2020 MPS. All Rights Reserved.

OPERATION

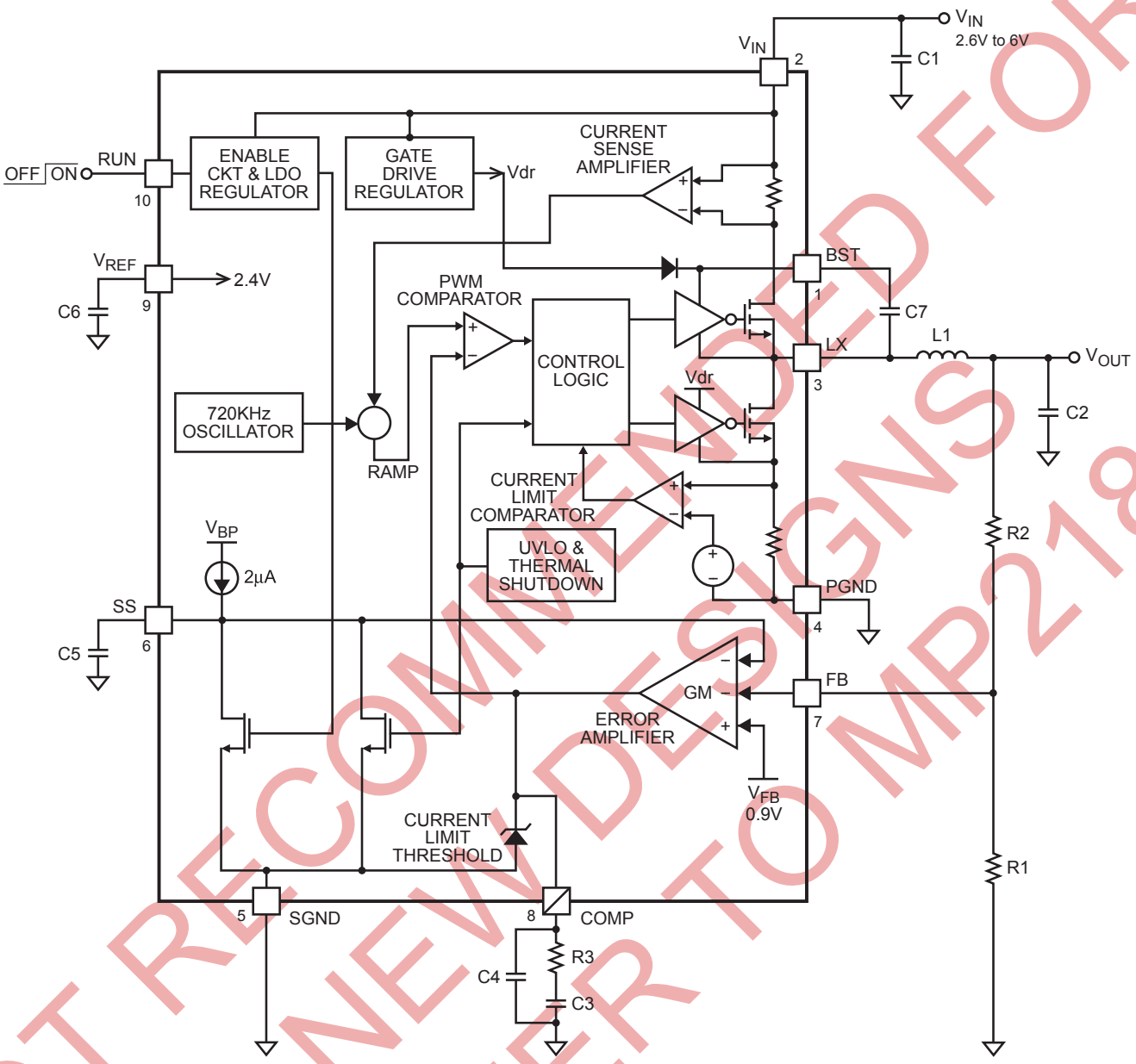

Figure 1—Functional Block Diagram

NOT RECOMMENDED FOR NEW DESIGNS REFER TO MP2182

MPS Proprietary Information. Unauthorized Photocopy and Duplication Prohibited.
© 2020 MPS. All Rights Reserved.

The MP2108 measures the output voltage through an external resistive voltage divider and compares it to the internal 0.9V reference to generate the error voltage at COMP. The current-mode regulator uses the voltage at COMP and compares it to the inductor current to regulate the output voltage. The use of current-mode regulation improves transient response and control loop stability.

At the beginning of each cycle, the high-side N-Channel MOSFET is turned on, forcing the inductor current to rise. The current at the drain of the high-side MOSFET is internally measured and converted to a voltage by the current sense amplifier.

That voltage is compared to the error voltage at COMP. When the inductor current rises sufficiently, the PWM comparator turns off the high-side switch and turns on the low-side switch; forcing the inductor current to decrease.

The average inductor current is controlled by the voltage at COMP, which in turn, is controlled by the output voltage. Thus the output voltage controls the inductor current to satisfy the load.

Since the high-side N-Channel MOSFET requires voltage above V_{IN} to drive its gate, a bootstrap capacitor from LX to BST is required to drive the high-side MOSFET gate. When LX is driven low (through the low-side MOSFET), the BST capacitor is internally charged. The voltage at BST is applied to the high-side MOSFET gate to turn it on. Voltage is maintained until the high-side MOSFET is turned off and the low-side MOSFET is turned on, and the cycle repeats. Connect a 10nF or greater capacitor from BST to SW to drive the high-side MOSFET gate.

APPLICATION INFORMATION

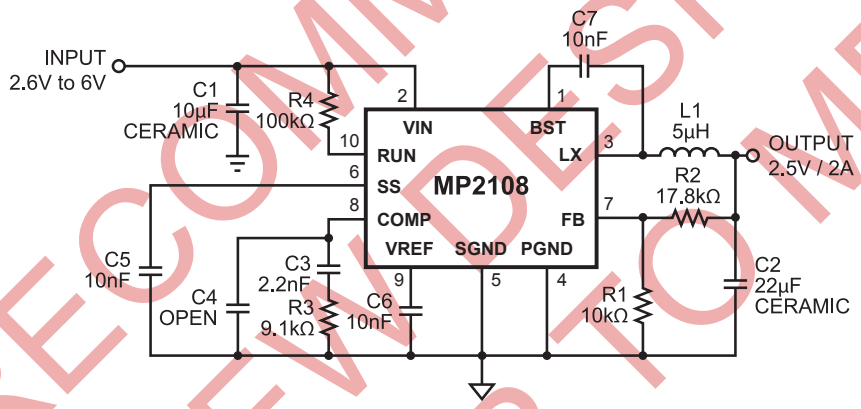

Figure 2—Typical Application Circuit

Internal Low-Dropout Regulator

The internal power to the MP2108 is supplied from the input voltage (VIN) through an internal 2.4V low-dropout linear regulator, whose output is VREF. Bypass VREF to SGND with a 10nF or greater capacitor for proper operation. The internal regulator can not supply more current than is required to operate the MP2108. Therefore, do not apply any external load to VREF.

Soft-Start

The MP2108 includes a soft-start timer that slowly ramps the output voltage at startup to prevent excessive current at the input.

When power is applied to the MP2108, and RUN is asserted. A 2µA internal current source charges the external capacitor at SS. As the capacitor charges, the voltage at SS rises. The MP2108 internally limits the feedback threshold voltage at FB to that of the voltage at SS. This forces the output voltage to rise at the same

NOT RECOMMENDED FOR NEW DESIGNS REFER TO MP2182

MPS Proprietary Information. Unauthorized Photocopy and Duplication Prohibited.
© 2020 MPS. All Rights Reserved.

rate as the voltage at SS, forcing a linear output voltage ramp from 0V to the desired regulation voltage during soft-start.

The soft-start period is determined by the equation:

$$t_{SS} = 0.45 \times C5$$

Where C5 (in nF) is the soft-start capacitor from SS to GND, and t_{SS} (in ms) is the soft-start period. Determine the capacitor required for a given soft-start period by the equation:

$$C5 = 2.22 \times t_{SS}$$

Use values for C5 between 10nF and 22nF to set the soft-start period between 4ms and 10ms.

Setting the Output Voltage (see Figure 2)
Set the output voltage by selecting the resistive voltage divider ratio. The voltage divider drops the output voltage to the 0.9V feedback voltage. Use 10kΩ for the low-side resistor of the voltage divider. Determine the high-side resistor by the equation:

$$R2 = \left(\frac{V_{OUT}}{0.9V} - 1\right) \times R1$$

Where R2 is the high-side resistor, R1 is the low-side resistor and V_{OUT} is the output voltage.

Selecting the Input Capacitor
The input current to the step-down converter is discontinuous, so a capacitor is required to supply the AC current to the step-down converter while maintaining the DC input voltage. A low ESR capacitor is required to keep the noise at the IC to a minimum. Ceramic capacitors are preferred, but tantalum or low ESR electrolytic capacitors are also an option.

The capacitor can be electrolytic, tantalum or ceramic. Because it absorbs the input switching current, it must have an adequate ripple current rating. Use a capacitor with RMS current rating greater than 1/2 of the DC load current.

For stable operation, place the input capacitor as close to the IC as possible. A smaller high quality 0.1μF ceramic capacitor may be placed closer to the IC with the larger capacitor placed further away.

If using this technique, it is recommended that the larger capacitor be a tantalum or electrolytic type. All ceramic capacitors should be placed close to the IC. For most applications, a 10μF ceramic capacitor will work.

Selecting the Output Capacitor
The output capacitor (C2) is required to maintain the DC output voltage. Low ESR capacitors are preferred to keep the output voltage ripple to a minimum. The characteristics of the output capacitor also affect the stability of the regulation control system. Ceramic, tantalum, or low ESR electrolytic capacitors are recommended.

The output voltage ripple is:

$$V_{RIPPLE} = \frac{V_{OUT}}{f_{SW} \times L} \times \left(1 - \frac{V_{OUT}}{V_{IN}}\right) \times \left(R_{ESR} + \frac{1}{8 \times f_{SW} \times C2}\right)$$

Where V_{RIPPLE} is the output voltage ripple, f_{SW} is the switching frequency, V_{IN} is the input voltage and R_{ESR} is the equivalent series resistance of the output capacitors.

Choose an output capacitor to satisfy the output ripple requirements of the design. A 22μF ceramic capacitor is suitable for most applications.

Selecting the Inductor
The inductor is required to supply constant current to the output load while being driven by the switched input voltage. A larger value inductor results in less ripple current that in turn results in lower output ripple voltage. However, the larger value inductor is likely to have a larger physical size and higher series resistance. Choose an inductor that does not saturate under the worst-case load conditions. A good rule for determining the inductance is to allow peak-to-peak ripple current to be approximately 30% to 40% of the maximum load current. Make sure that the peak inductor current (the load current plus half the peak-to-peak inductor ripple current) is below 2.5A to prevent loss of regulation due to the current limit.

NOT RECOMMENDED FOR NEW DESIGNS REFER TO MP2182

MPS Proprietary Information. Unauthorized Photocopy and Duplication Prohibited.
© 2020 MPS. All Rights Reserved.

Calculate the required inductance value by the equation:

$$L = \frac{V_{OUT} \times (V_{IN} - V_{OUT})}{V_{IN} \times f_{SW} \times \Delta I}$$

Where ΔI is the peak-to-peak inductor ripple current. It is recommended to choose ΔI to be 30%~40% of the maximum load current.

Compensation

The system stability is controlled through the COMP pin. COMP is the output of the internal transconductance error amplifier. A series capacitor-resistor combination sets a pole-zero combination to control the characteristics of the control system.

The DC loop gain is:

$$A_{VDC} = \left(\frac{V_{FB}}{V_{OUT}}\right) \times A_{VEA} \times G_{CS} \times R_{LOAD}$$

Where V_{FB} is the feedback voltage, 0.9V, A_{VEA} is the transconductance error amplifier voltage gain, 400 V/V and G_{CS} is the current sense transconductance, (roughly the output current divided by the voltage at COMP), 4.5A/V.

R_{LOAD} is the load resistance:

$$R_{LOAD} = \frac{V_{OUT}}{I_{OUT}}$$

Where I_{OUT} is the output load current.

The system has 2 poles of importance, one is due to the compensation capacitor (C3), and the other is due to the load resistance and the output capacitor (C2), where:

$$f_{P1} = \frac{G_{EA}}{2\pi \times A_{VEA} \times C3}$$

P1 is the first pole, and G_{EA} is the error amplifier transconductance (450μA/V) and

$$f_{P2} = \frac{1}{2\pi \times R_{LOAD} \times C2}$$

The system has one zero of importance, due to the compensation capacitor (C3) and the compensation resistor (R3). The zero is:

$$f_{Z1} = \frac{1}{2\pi \times R3 \times C3}$$

If large value capacitors with relatively high equivalent-series-resistance (ESR) are used, the zero due to the capacitance and ESR of the output capacitor can be compensated by a third pole set by R3 and C4. The pole is:

$$f_{P3} = \frac{1}{2\pi \times R3 \times C4}$$

The system crossover frequency (the frequency where the loop gain drops to 1dB or 0dB) is important. Set the crossover frequency below one tenth of the switching frequency to insure stable operation. Lower crossover frequencies result in slower response and worse transient load recovery. Higher crossover frequencies degrade the phase and/or gain margins and can result in instability.

Table 1—Compensation Values for Typical Output Voltage/Capacitor Combinations

V_{OUT}	C2	R3	C3	C4	R2	R1
1.8V	22μF Ceramic	6.8kΩ	3.3nF	None	10kΩ	10kΩ
2.5V	22μF Ceramic	9.1kΩ	2.2nF	None	17.8kΩ	10kΩ
3.3V	22μF Ceramic	12kΩ	1.8nF	None	27kΩ	10kΩ
1.8V	47μF Tantalum (300mΩ)	13kΩ	2nF	1nF	10kΩ	10kΩ
2.5V	47μF Tantalum (300mΩ)	18kΩ	1.2nF	750pF	17.8kΩ	10kΩ
3.3V	47μF Tantalum (300mΩ)	24kΩ	1nF	560pF	27kΩ	10kΩ
1V	47μF Ceramic	6.98kΩ	3.3nF	None	1.18kΩ	10kΩ
1.2V	47μF Ceramic	6.98kΩ	3.3nF	None	3.4kΩ	10kΩ

Choosing the Compensation Components

The values of the compensation components listed in Table 1 yields a stable control loop for the given output voltage and capacitor. To optimize the compensation components for conditions not listed in Table 1, use the following procedure.

NOT RECOMMENDED FOR NEW DESIGNS REFER TO MP2182

MPS Proprietary Information. Unauthorized Photocopy and Duplication Prohibited.
© 2020 MPS. All Rights Reserved.

Choose the compensation resistor to set the desired crossover frequency. Determine the value by the following equation:

$$R3 = \frac{2\pi \times C2 \times f_C}{G_{EA} \times G_{CS}} \times \frac{V_{OUT}}{V_{FB}}$$

Where G_{EA} is the EA transconductance (450μA/V) and f_C is the desired crossover frequency (preferably 33KHz).

Choose the compensation capacitor to set the zero below one fourth of the crossover frequency. Determine the value by the following equation:

$$C3 > \frac{2}{\pi \times R3 \times f_C}$$

Determine if the second compensation capacitor, C4 is required. It is required if the ESR zero of the output capacitor happens at less than half of the switching frequency or:

$$\pi \times C2 \times R_{ESR} \times f_{SW} > 1$$

where R_{ESR} is the equivalent series resistance of the output capacitor.

The second compensation capcacitor is determined by the equation:

$$C4 = \frac{C2 \times R_{ESR(max)}}{R3}$$

Where $R_{ESR(MAX)}$ is the maximum ESR of the output capacitor.

External Bootstrap Diode

An external bootstrap diode may enhance the efficiency of the regulator, the applicable conditions of external BST diode are:

- V_{OUT} is 5V or 3.3V; and
- Duty cycle is high: $D=\frac{V_{OUT}}{V_{IN}}$>65%

In these cases, an external BST diode is recommended from the output of the voltage regulator to BST pin, as shown in Fig.3

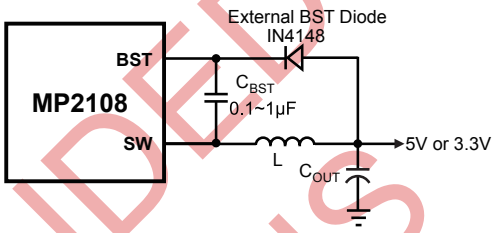

Figure 3—Add Optional External Bootstrap Diode to Enhance Efficiency

The recommended external BST diode is IN4148, and the BST cap is 0.1~1μF.

PCB Layout Guide

PCB layout is very important to achieve stable operation. It is highly recommended to duplicate EVB layout for optimum performance.

If change is necessary, please follow these guidelines and take Figure 4 for reference.

1) Keep the path of switching current short and minimize the loop area formed by Input cap, high-side MOSFET and low-side MOSFET.
2) Bypass ceramic capacitors are suggested to be put close to the Vin Pin.
3) Ensure all feedback connections are short and direct. Place the feedback resistors and compensation components as close to the chip as possible.
4) Route SW away from sensitive analog areas such as FB.
5) Connect IN, SW, and especially GND respectively to a large copper area to cool the chip to improve thermal performance and long-term reliability.

NOT RECOMMENDED FOR NEW DESIGNS REFER TO MP2182

MPS Proprietary Information. Unauthorized Photocopy and Duplication Prohibited.
© 2020 MPS. All Rights Reserved.

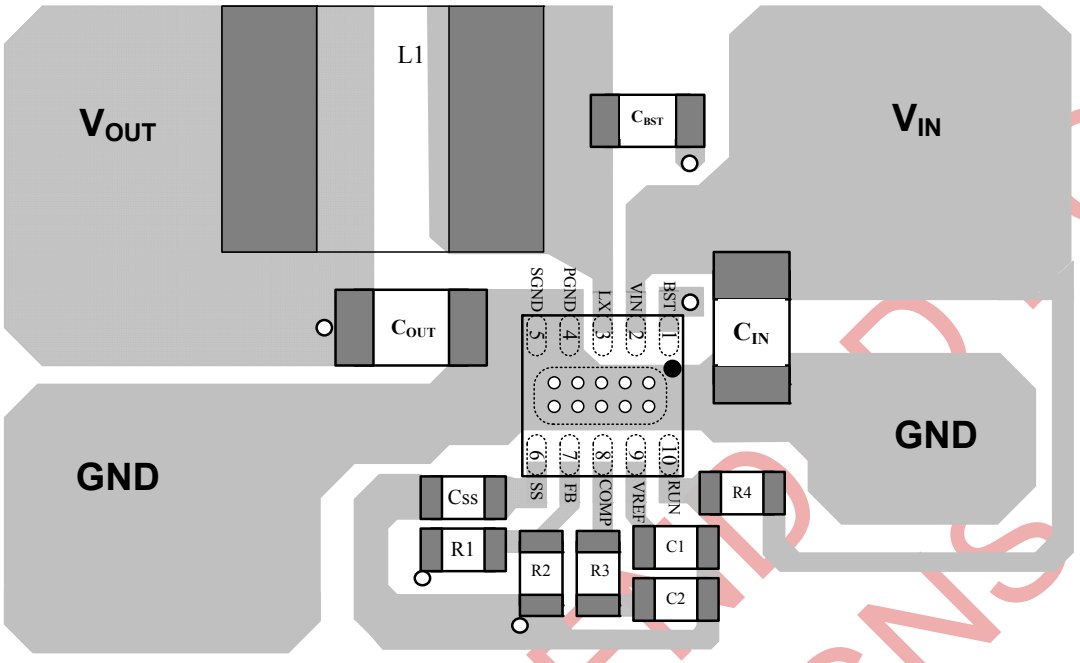

Top Layer

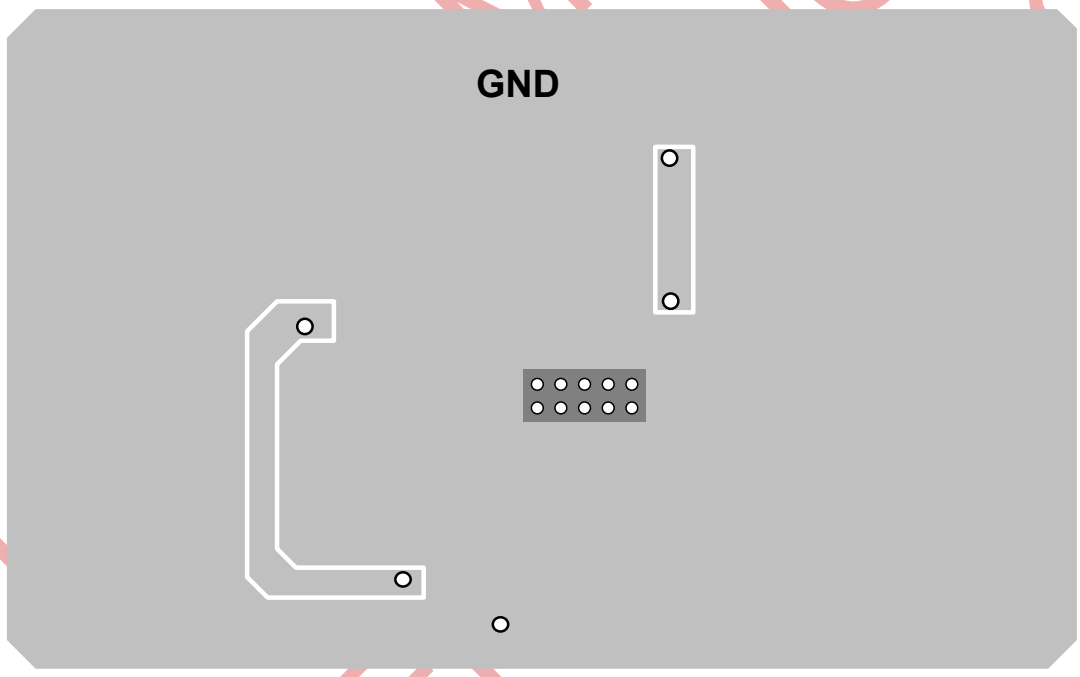

Bottom Layer

Figure 4—PCB Layout (Double Layers)

NOT RECOMMENDED FOR NEW DESIGNS 2182

MPS Proprietary Information. Unauthorized Photocopy and Duplication Prohibited.
© 2020 MPS. All Rights Reserved.

PACKAGE INFORMATION

MSOP10

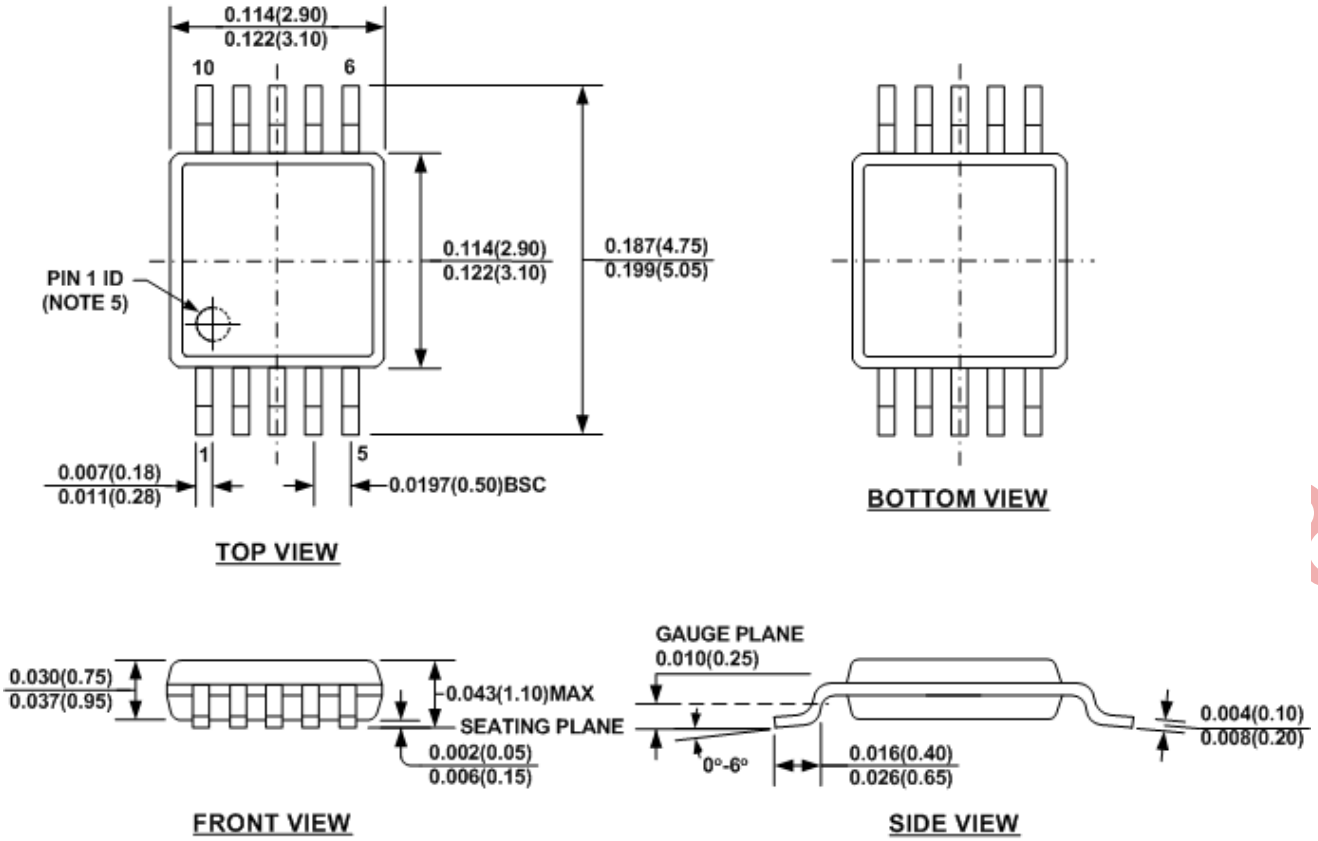

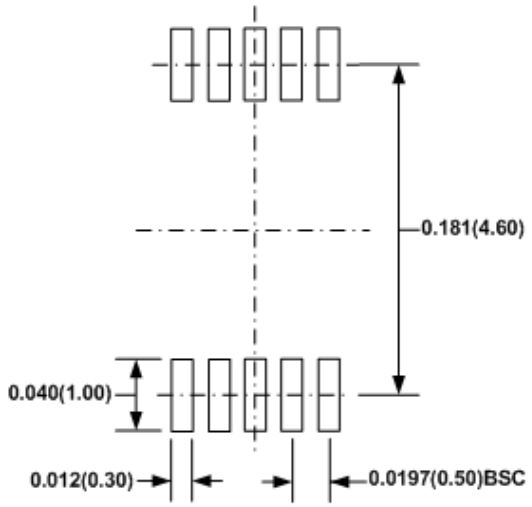

RECOMMENDED LAND PATTERN

NOTE:

1) CONTROL DIMENSION IS IN INCHES. DIMENSION IN BRACKET IS IN MILLIMETERS.
2) PACKAGE LENGTH DOES NOT INCLUDE MOLD FLASH, PROTRUSION OR GATE BURR.
3) PACKAGE WIDTH DOES NOT INCLUDE INTERLEAD FLASH OR PROTRUSION.
4) LEAD COPLANARITY (BOTTOM OF LEADS AFTER FORMING) SHALL BE 0.004" INCHES MAX.
5) PIN 1 IDENTIFICATION HAS THE HALF OR FULL CIRCLE OPTION.
6) DRAWING MEETS JEDEC MO-817, VARIATION BA.
7) DRAWING IS NOT TO SCALE.

MPS Proprietary Information. Unauthorized Photocopy and Duplication Prohibited.
© 2020 MPS. All Rights Reserved.

QFN10 (3mm x 3mm)

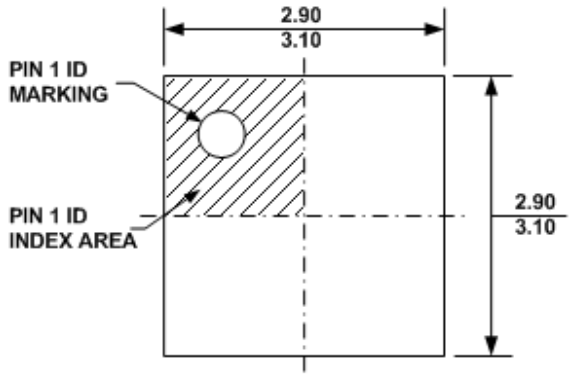

TOP VIEW

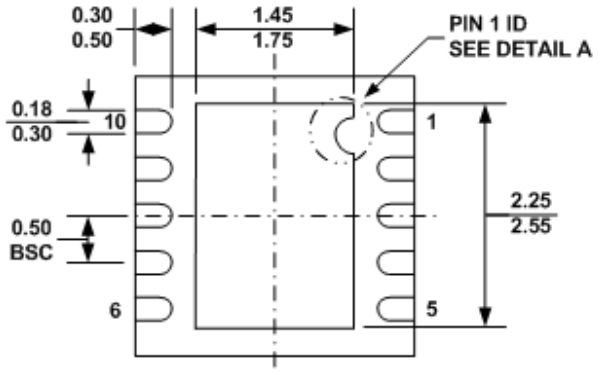

BOTTOM VIEW

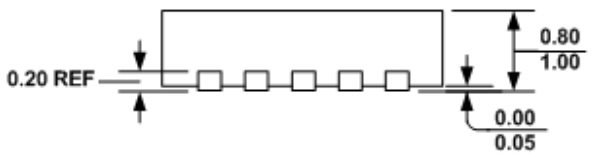

SIDE VIEW

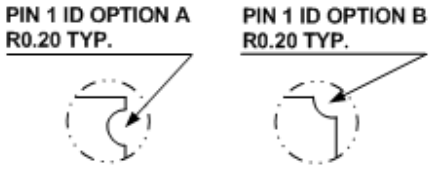

DETAIL A

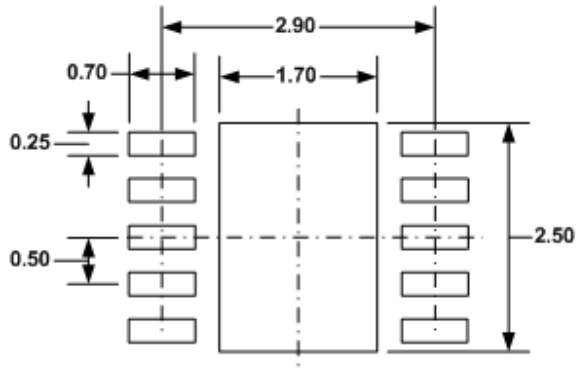

RECOMMENDED LAND PATTERN

NOTE:

1) ALL DIMENSIONS ARE IN MILLIMETERS.
2) EXPOSED PADDLE SIZE DOES NOT INCLUDE MOLD FLASH.
3) LEAD COPLANARITY SHALL BE 0.10 MILLIMETER MAX.
4) DRAWING CONFORMS TO JEDEC MO-229, VARIATION VEED-5.
5) DRAWING IS NOT TO SCALE.

NOTICE: The information in this document is subject to change without notice. Users should warrant and guarantee that third party Intellectual Property rights are not infringed upon when integrating MPS products into any application. MPS will not assume any legal responsibility for any said applications.

MPS Proprietary Information. Unauthorized Photocopy and Duplication Prohibited.
© 2020 MPS. All Rights Reserved.