M23-5EP198A8023 - Cable connector

1628881

https://www.phoenixcontact.com/us/products/1628881

Please be informed that the data shown in this PDF document is generated from our online catalog. Please find the complete data in the user documentation. Our general terms of use for downloads are valid.



M23, Cable connector, series: M23 PRO, straight short, shielded: yes, Screw locking mechanism, No. of pos.: 5+PE, contact connection type: Pin, Crimp connection, cable diameter range: 7.5 mm ... 12 mm, Item is lead-free in accordance with RoHS II without Exemption 6c (Pb < 0.1 %)

Your advantages

- Solutions with cross-manufacturer compatibility for standard and fast locking systems
- Reliable under the harshest conditions: cable connectors with vibration brake
- Modern, consistent design for highly convenient operation
- Easy, cost-effective cable assembly: uniform shielding of M17 to M40

Commercial data

Item number	1628881
Packing unit	1 pc
Minimum order quantity	1 pc
Note	Made to order (non-returnable)
Sales key	AB30
Product key	ABRBBA
Catalog page	Page 146 (C-2-2019)
GTIN	4055626617770
Weight per piece (including packing)	140.4 g
Weight per piece (excluding packing)	120.87 g
Customs tariff number	85366990
Country of origin	DE

Technical data

Notes

Order information:	Order crimp contacts 6 x Ø 2 mm separately

Safety note

Safety note	WARNING: The connectors may not be plugged in or disconnected under load. Ignoring the warning or improper use may damage persons and/or property.
	• WARNING: Commission properly functioning products only. The products must be regularly inspected for damage. Decommission defective products immediately. Replace damaged products. Repairs are not possible.
	• WARNING: Only electrically qualified personnel may install and operate the product. They must observe the following safety notes. The qualified personnel must be familiar with the basics of electrical engineering. They must be able to recognize and prevent danger. The relevant symbol on the packaging indicates that only personnel familiar with electrical engineering are allowed to install and operate the product.
	• The products are suitable for applications in plant, controller, and electrical device engineering.
	• When operating the connectors in outdoor applications, they must be separately protected against environmental influences.
	• Assembled products may not be manipulated or improperly opened.
	• Only use mating connectors that are specified in the technical data of the standards listed (e.g. the ones listed in the product accessories online at phoenixcontact.com/products).
	• When using the product in direct connection with third-party manufacturers, the user is responsible.
	• For operating voltages > 50 V AC, conductive connector housings must be grounded
	• Ensure that the protective or functional ground has been properly connected.
	• VDE 0100/1.97 § 411.1.3.2 and DIN EN 60 204/11.98 § 14.1.3 are applicable when combining several circuits in a cable and/or connector
	• Only use tools recommended by Phoenix Contact
	• The installation notes/Design In documents online on the download page at phoenixcontact.com/products must be observed for this product.
	• Operate the connector only when it is fully plugged in and interlocked.
	• Ensure that when laying the cable, the tensile load on the connectors does not exceed the upper limit specified in the standards.
	• Observe the minimum bending radius of the cable. Lay the cable without twisting it.
	• The connector warms up in normal operation. Depending on the ambient conditions, the surface of the connector can continue to warm up. In this case, the user is responsible for posting

	warnings (e.g. DIN EN ISO 13732-1:2008-12).

Product properties

Product type	Circular connector (cable-side)

Connector

Insulating body

Note	Order information: Order crimp contacts 6 x Ø 2 mm separately
Insulation body material	PA 6.6
Insertion/withdrawal cycles	100
Connection method	Crimp connection
Contact switching type	Pin
Application	Power
Number of positions	6
Connection profile	5+PE
Contact diameter Power contacts	2 mm
Litz wire cross-section Power contacts min.	0.25 mm²
Litz wire cross-section Power contacts max.	4 mm²
Rated current Power contacts	30 A
Note	for max. connection cross section
Rated voltage	630 V
Rated surge voltage	6 kV
Overvoltage category	III
Degree of pollution	3
Installation height	3000 m

Housing

Housing material	GD-Zn
Type of locking	Screw locking mechanism
Pg screw connection	none
Degree of protection (plugged in)	IP66 / IP68 (2m / 24h) / IP69K
Thread type	M23

Seal

External cable diameter	7.5 mm ... 12 mm
Seal material	FKM

Environmental and real-life conditions

Ambient conditions

Ambient temperature (operation)	-40 °C ... 105 °C (see to derating)
Permanent temperature	125 °C (DIN EN 60512-9-2 / 1000 h)

Drawings

Diagram

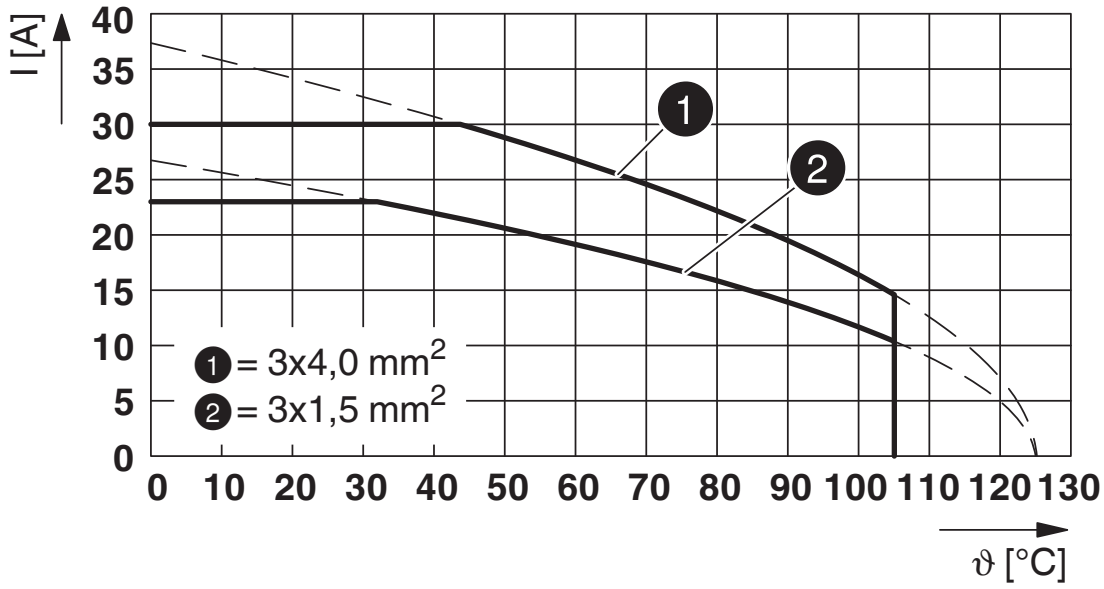

I = current strength, ϑ = ambient temperature, 3 x 30 A (curve 1), 3 x 24 A (curve 2)

Dimensional drawing

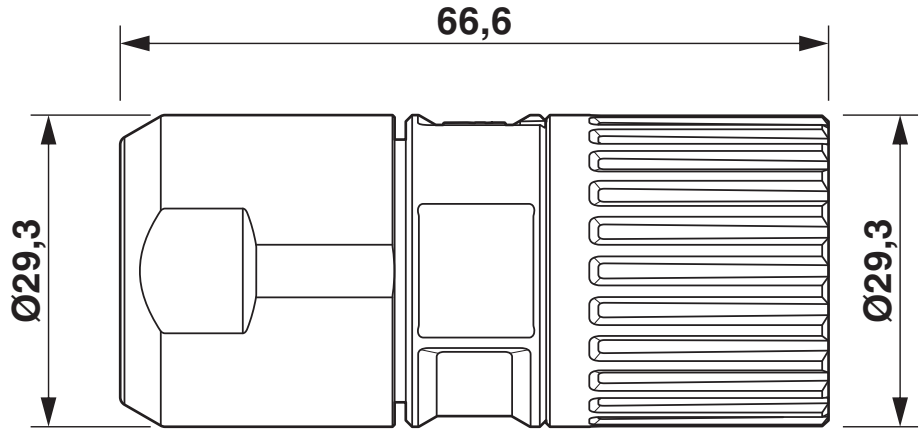

Technical drawings can be found under Downloads

Schematic diagram

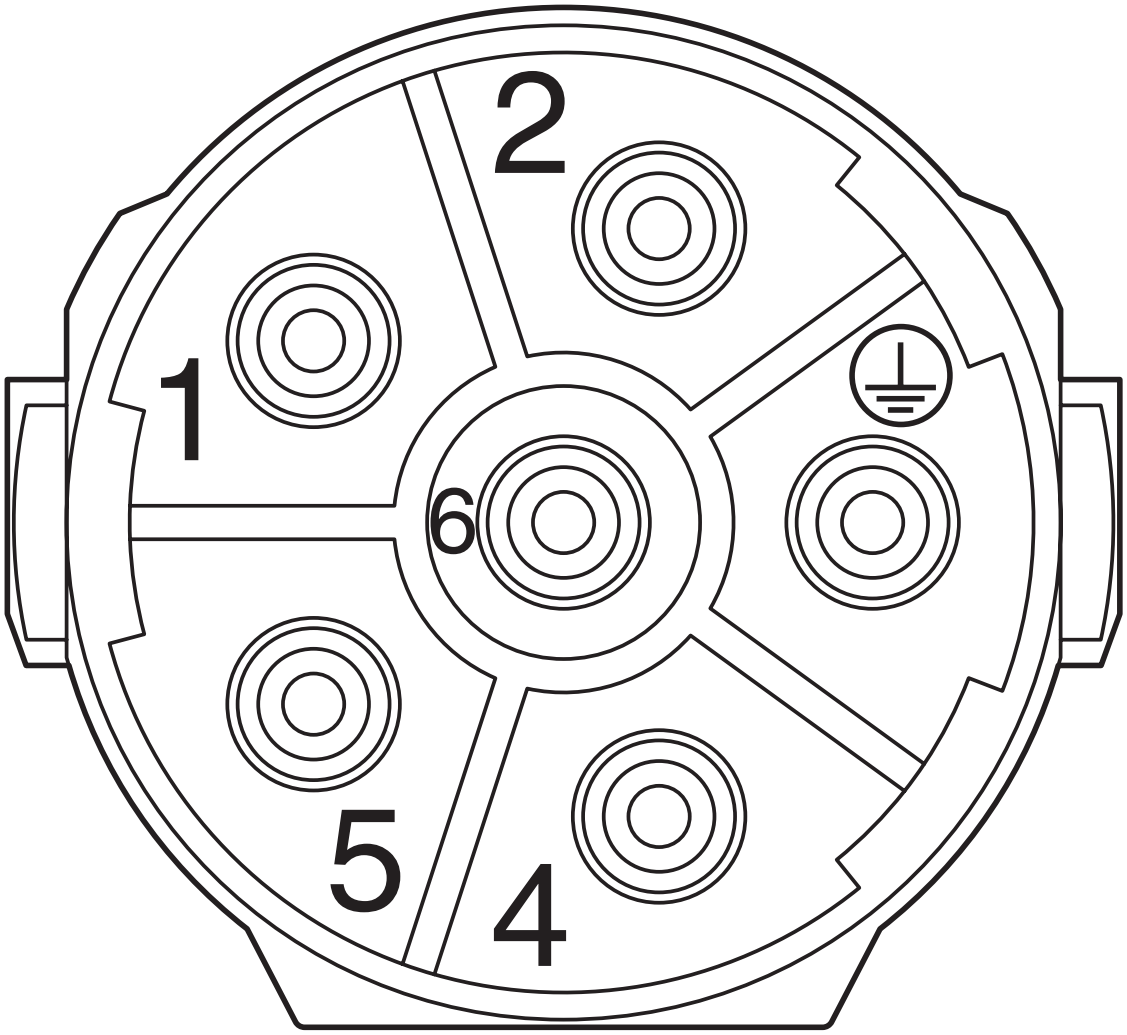

Connector pin assignment

Approvals

To download certificates, visit the product detail page: https://www.phoenixcontact.com/us/products/1628881

UL Listed
Approval ID: E468743-20190627

cUL Listed
Approval ID: E468743-20190627

cULus Listed

Classifications

ECLASS

ECLASS-11.0	27440102
ECLASS-12.0	27440116
ECLASS-13.0	27440116

ETIM

ETIM 9.0	EC002635

UNSPSC

UNSPSC 21.0	39121400

Environmental product compliance

EU RoHS

Fulfills EU RoHS substance requirements	Yes, No exemptions

China RoHS

Environment friendly use period (EFUP)	EFUP-E
	No hazardous substances above the limits

EU REACH SVHC

REACH candidate substance (CAS No.)	No substance above 0.1 wt%

Accessories

SF-Z0028 - Torque screwdriver

1607456

https://www.phoenixcontact.com/us/products/1607456



Torque screwdriver, series: RC, UC, SH, SF

SF-Z0027 - Hook wrench

1607455

https://www.phoenixcontact.com/us/products/1607455



Hook wrench, series: RC, UC, RF, SF

SF-20KP011 - Crimp contact

1050147

https://www.phoenixcontact.com/us/products/1050147



Crimp contact, Pin, turned, contact diameter: 2 mm, crimp range: 0.25 mm^2 ... 1 mm^2, Alternative product in accordance with RoHS II without Exemption 6c (Pb < 0.1 %) item no.: 1238179

SF-20KP012 - Crimp contact

1050205

https://www.phoenixcontact.com/us/products/1050205



Crimp contact, Pin, turned, Single contact, contact diameter: 2 mm, crimp range: 1.5 mm^2 ... 2.5 mm^2, Alternative product in accordance with RoHS II without Exemption 6c (Pb < 0.1 %) item no.: 1238179

SF-20KP013 - Crimp contact

1050210

https://www.phoenixcontact.com/us/products/1050210



Crimp contact, Pin, turned, Single contact, contact diameter: 2 mm, crimp range: 2.5 mm^2 ... 4 mm^2, Alternative product in accordance with RoHS II without Exemption 6c (Pb < 0.1 %) item no.: 1238180

PROT-M23PRO-PW-IT-IP20 - Plastic protective cap

1055746

https://www.phoenixcontact.com/us/products/1055746



Plastic protective cap, M23, degree of protection: IP20, series: M23 PRO Leistung

PROT-M23PRO-PW-IT-IP67 - Plastic protective cap

1055747

https://www.phoenixcontact.com/us/products/1055747



Plastic protective cap, M23, degree of protection: IP67, series: M23 PRO Leistung

Phoenix Contact 2024 © - all rights reserved
https://www.phoenixcontact.com

Phoenix Contact USA
586 Fulling Mill Road
Middletown, PA 17057, United States
(+717) 944-1300
info@phoenixcon.com