PSR-M-GW-PN-PI - Data interface

1105102

https://www.phoenixcontact.com/us/products/1105102

Please be informed that the data shown in this PDF document is generated from our online catalog. Please find the complete data in the user documentation. Our general terms of use for downloads are valid.



Gateway for connecting a PSR-M base module to a higher-level controller, PROFINET, TBUS interface, plug-in Push-in terminal block, TBUS connector included

Product description

The configurable and individually scalable PSRmodular safety system is a flexible safety solution for monitoring your machine or system. PSRmodular gateways connect a PSR-M basic module to a higher-level controller. This gateway is intended for use with PROFINET.

Your advantages

- Cost-effective safety solution with a high level of adaptability to individual requirements
- Fast startup, thanks to easy hardware and software configuration
- Machine downtimes minimized with comprehensive, easy-to-understand diagnostics
- Narrow housing width of just 22.6 mm
- Tool-free and time-saving installation thanks to Push-in technology

Commercial data

Item number	1105102
Packing unit	1 pc
Minimum order quantity	1 pc
Sales key	DN02
Product key	DNA365
GTIN	4055626975030
Weight per piece (including packing)	163.4 g
Weight per piece (excluding packing)	125 g
Customs tariff number	85371098
Country of origin	IT

Technical data

Product properties

Product type	Gateways/Proxies

Insulation characteristics

Protection class	III (EN 50178)

Electrical properties

Maximum power dissipation for nominal condition	1.92 W
Nominal operating mode	100% operating factor
Interfaces	DIN rail TBUS for connection to the master module, supplied as standard

Air clearances and creepage distances between the power circuits

Rated insulation voltage	250 V AC
Rated surge voltage/insulation	Basic insulation 4 kV

Supply

Designation	A1/A2
Rated control circuit supply voltage U_S	19.2 V DC ... 28.8 V DC
Rated control circuit supply voltage U_S	24 V DC -20 % / +20 % (external fuse, typically 4 A)
Rated control supply current I_S	typ. 60 mA (without network connection)
	typ. 70 mA (with 1 network connection)
	typ. 80 mA (with 2 network connections)
Power consumption at U_S	typ. 1.68 W (with 1 network connection)
	typ. 1.92 W (with 2 network connections)
Inrush current	< 2.2 A (Δt = 1 ms at U_s)
Filter time	typ. 5 ms (in the event of voltage dips at U_s)
Protective circuit	Serial protection against polarity reversal
	Suppressor diode

Connection data

Connection method	Push-in connection
Stripping length	10 mm

Interfaces

Data: Network interface

Communication protocol	PROFINET
Connection method	RJ45 jack
Number of connections	2
Transmission speed	100 Mbps (Full duplex)

Data: Service interface

Connection method	USB 2.0 Hi-Speed

Number of connections	1

Signaling

Status display	1 x LED (green), 2 x LED (green, red)
Operating voltage display	1 x green LED
Error indication	2 x LED (red)

Dimensions

Width	22.61 mm
Height	107.74 mm
Depth	113.6 mm

Material specifications

Color (Housing)	gray (RAL 7042)
Housing material	Polyamide PA non-reinforced

Environmental and real-life conditions

Ambient conditions

Degree of protection	IP20
Min. degree of protection of inst. location	IP54
Ambient temperature (operation)	-10 °C ... 55 °C (observe derating)
Ambient temperature (storage/transport)	-20 °C ... 85 °C
Maximum altitude	≤ 2000 m (Above sea level)
Max. permissible humidity (storage/transport)	95 % (non-condensing)
Max. permissible relative humidity (operation)	95 % (non-condensing)
Shock	10g for Δt = 16 ms (continuous shock, 1000 shocks in each space direction)
Vibration (operation)	10 Hz ... 150 Hz, 2g

Approvals

CE

Identification	CE-compliant

Mounting

Mounting type	DIN rail mounting
Assembly note	Observe derating
Mounting position	vertical or horizontal

Drawings

Block diagram

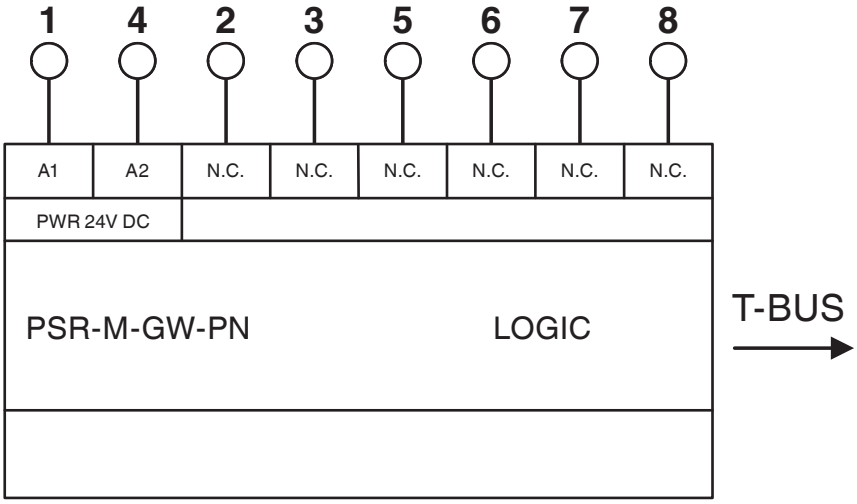

Application drawing

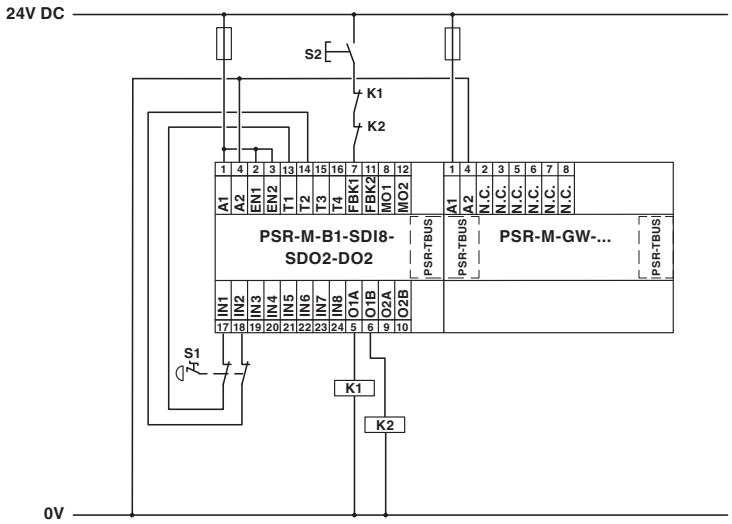

Approvals

To download certificates, visit the product detail page: https://www.phoenixcontact.com/us/products/1105102

UL Listed
Approval ID: FILE E 238705

cUL Listed
Approval ID: FILE E 238705

EAC
Approval ID: RU*-DE*B.00606/20

Functional Safety
Approval ID: Z10 029429 0013

cULus Listed

Classifications

ECLASS

ECLASS-11.0	27242608
ECLASS-12.0	27242608
ECLASS-13.0	27242608

ETIM

ETIM 9.0	EC001604

UNSPSC

UNSPSC 21.0	32151600

Environmental product compliance

EU RoHS

Fulfills EU RoHS substance requirements	Yes, No exemptions

China RoHS

Environment friendly use period (EFUP)	EFUP-E
	No hazardous substances above the limits

EU REACH SVHC

REACH candidate substance (CAS No.)	No substance above 0.1 wt%

Accessories

PSR-M-B1-SDI8-SDO2-DO2-SC - Safety module

1104981

https://www.phoenixcontact.com/us/products/1104981



Configurable safety module (basic module), 8 safe inputs, 2 safe outputs, 2 reset inputs, 2 signal outputs, 4 clock outputs, can be extended via TBUS, up to SIL 3, Cat. 4/PL e, plug-in screw terminal block, TBUS connector not included

PSR-M-B1-SDI8-SDO2-DO2-PI - Safety module

1104972

https://www.phoenixcontact.com/us/products/1104972



Configurable safety module (basic module), 8 safe inputs, 2 safe outputs, 2 reset inputs, 2 signal outputs, 4 clock outputs, can be extended via TBUS, up to SIL 3, Cat. 4/PL e, plug-in Push-in terminal block, TBUS connector not included

PSR-M-B2-SDI8-SDO4-DO4-SC - Safety module

1104974

https://www.phoenixcontact.com/us/products/1104974



Configurable safety module (basic module), 8 safe inputs, 4 safe outputs, 4 reset inputs or 4 signal outputs, 4 clock outputs, can be extended via TBUS, up to SIL 3, Cat. 4/PL e, plug-in screw terminal block, TBUS connector not included

PSR-M-B2-SDI8-SDO4-DO4-PI - Safety module

1104975

https://www.phoenixcontact.com/us/products/1104975



Configurable safety module (basic module), 8 safe inputs, 4 safe outputs, 4 reset inputs or 4 signal outputs, 4 clock outputs, can be extended via TBUS, up to SIL 3, Cat. 4/PL e, plug-in Push-in terminal block, TBUS connector not included

CABLE-USB/MINI-USB-3,0M - USB cable

2986135

https://www.phoenixcontact.com/us/products/2986135

USB connecting cable: USB plug type A to USB plug type Mini-B; length: 3 m



CP-MSTB - Coding profile

1734634

https://www.phoenixcontact.com/us/products/1734634

Coding profile, is inserted into the slot on the plug or inverted header, red insulating material



CR-MSTB - Coding section

1734401

https://www.phoenixcontact.com/us/products/1734401



Coding section, inserted into the recess in the header or the inverted plug, red insulating material

CRIMPFOX 6 - Crimping pliers

1212034

https://www.phoenixcontact.com/us/products/1212034



Crimping pliers, for ferrules without insulating collar according to DIN 46228 Part 1 and ferrules with insulating collar according to DIN 46228 Part 4, 0.25 mm^2 ... 6.0 mm^2, lateral entry, trapezoidal crimp

Phoenix Contact 2024 © - all rights reserved
https://www.phoenixcontact.com

Phoenix Contact USA
586 Fulling Mill Road
Middletown, PA 17057, United States
(+717) 944-1300
info@phoenixcon.com