SACC-M12FSB-2QO SH PB - Data connector

1413932

https://www.phoenixcontact.com/us/products/1413932

Please be informed that the data shown in this PDF document is generated from our online catalog. Please find the complete data in the user documentation. Our general terms of use for downloads are valid.

Data connector, PROFIBUS (12 Mbps), 2-position, halogen-free, shielded, Socket straight M12, coding: B, Insulation displacement connection, knurl material: Zinc die-cast, nickel-plated, external cable diameter 5 mm ... 9.7 mm

Your advantages

- Safe use in the field, thanks to a high degree of protection
- Insulation displacement connection: innovative and time-saving assembly without stripping the single wire
- Reliable signal transmission – 360° shielding in environments with electromagnetic interference

Commercial data

Item number	1413932
Packing unit	1 pc
Minimum order quantity	1 pc
Sales key	BF31
Product key	BF2CDC
Catalog page	Page 201 (C-6-2019)
GTIN	4055626013145
Weight per piece (including packing)	44.9 g
Weight per piece (excluding packing)	44.9 g
Customs tariff number	85366990
Country of origin	DE

Technical data

Notes

Assembly note	NOTE: Observe the permissible bending radii when laying conductors, since the degree of protection may be put in jeopardy if the bending forces are too high. Alleviate mechanical loads upstream of the connector, e.g. by using cable ties.

Product properties

Product type	Circular connector (cable-side)
Application	Data
Sensor type	PROFIBUS
Number of positions	2
No. of cable outlets	1
Shielded	yes
Coding	B
Cable outlet	straight

Insulation characteristics

Overvoltage category	II
Degree of pollution	3

Dimensions

Dimensional drawing	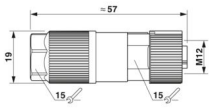
Length	57 mm
Wrench size, union nut	15 mm

External dimensions

Outside diameter	5 mm ... 9.7 mm

Housing

Diameter housing	19 mm

Material specifications

Flammability rating according to UL 94	V0
Seal material	NBR
Material of grip body	Zinc die-cast, nickel-plated
Contact material	CuSn
Contact surface material	Ni/Au
Contact carrier material	PA 6.6
Material for screw connection	Zinc die-cast, nickel-plated

Standards/regulations	PA 6.6: Fire protection in rail vehicles - requirement sets R22, R23, R24, and R26 acc. to DIN EN 45545-2 (Risk level HL1 - HL3)
Wire insulation material	PVC / PE / PP / rubber

Connection data

Conductor connection

Connection method	Insulation displacement connection
Connection cross section	0.25 mm² ... 0.75 mm² (flexible)
	0.14 mm² ... 0.5 mm² (solid)
Connection cross section AWG	24 ... 18 (flexible)
	26 ... 20 (solid)
Tightening torque	5 Nm (Pressure nut)

Pin assignment

Contact | Color (signal designation) | Contact (optional)	2 = GN (A)
	4 = RD (B)

Electrical properties

Rated surge voltage	0.8 kV
Insulation resistance	≥ 100 MΩ
Nominal voltage U_N	48 V AC
	60 V DC
Nominal current I_N	4 A

Mechanical properties

Mechanical data

Insertion/withdrawal cycles	≥ 100

Connector

Connection 1

Head design	Socket
Head cable outlet	straight
Head thread type	M12
Coding	B

Cable/line

Signal type/category	PROFIBUS, 12 Mbps

Environmental and real-life conditions

Ambient conditions

Degree of protection	IP65
	IP67
Ambient temperature (operation)	-40 °C ... 85 °C (Plug / socket)

Ambient temperature (assembly)	-5 °C ... 50 °C

Standards and regulations

Testing

Standards/regulations	PA 6.6: Fire protection in rail vehicles - requirement sets R22, R23, R24, and R26 acc. to DIN EN 45545-2 (Risk level HL1 - HL3)

M12

Standard designation	M12 connector
Standards/specifications	according to IEC 61076-2-101

Drawings

Schematic diagram

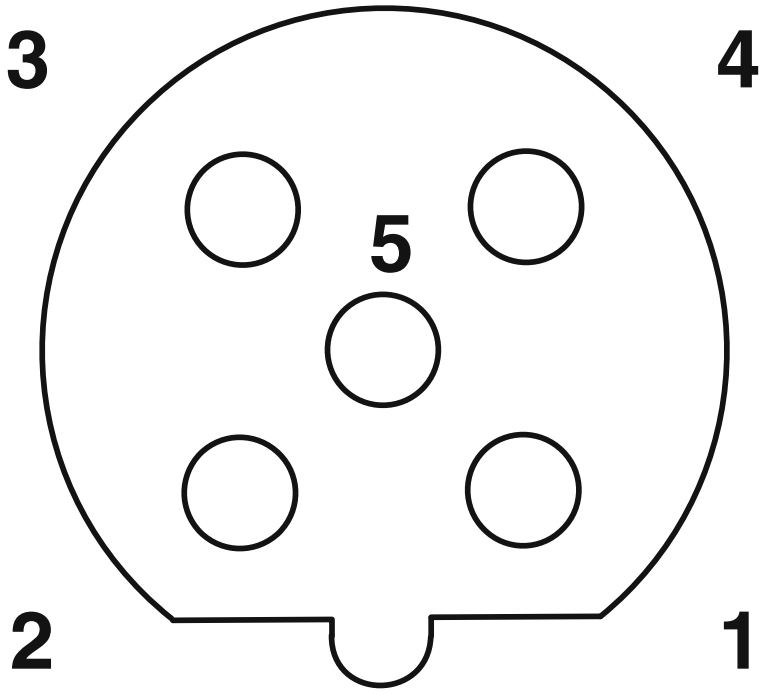

Pin assignment M12 socket, 5-pos., B-coded, female side

Dimensional drawing

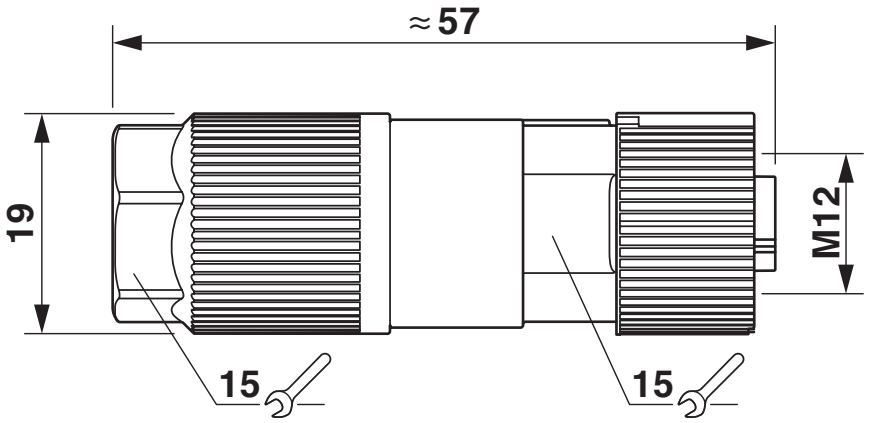

M12 x 1 socket, straight, shielded

Functional drawing

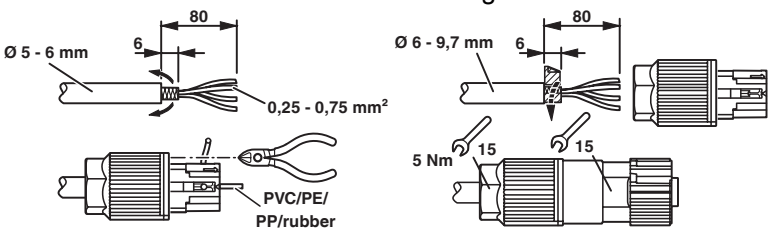

Approvals

To download certificates, visit the product detail page: https://www.phoenixcontact.com/us/products/1413932

EAC
Approval ID: RU C-DE.BL08.B.00511

Classifications

ECLASS

ECLASS-11.0	27440102
ECLASS-12.0	27440116
ECLASS-13.0	27440116

ETIM

ETIM 9.0	EC002635

UNSPSC

UNSPSC 21.0	39121400

Environmental product compliance

EU RoHS

Fulfills EU RoHS substance requirements	Yes, No exemptions

China RoHS

Environment friendly use period (EFUP)	EFUP-E
	No hazardous substances above the limits

EU REACH SVHC

REACH candidate substance (CAS No.)	No substance above 0.1 wt%

Accessories

VS-08-RJ45-FOLIEN-SET - Shielding foil

1417184

https://www.phoenixcontact.com/us/products/1417184

Shielding foil set, 25 pieces, replacement for RJ45 and M12 Quickon connector

PROT-M12 MS-PA-CHAIN - Screw plug

1430899

https://www.phoenixcontact.com/us/products/1430899

M12 sealing cap with fixing band, for sensor cables, for free M12 sockets

TSD 04 SAC - Torque screwdriver

1208429

https://www.phoenixcontact.com/us/products/1208429

Torque screwdriver, with preset torque of 0.4 Nm and 4 mm hexagonal drive for M12 connectors

SACC BIT M12-D20 - Tool

1208445

https://www.phoenixcontact.com/us/products/1208445

Nut for assembling M12 connectors for assembly with a knurl diameter of 20 mm, for 4 mm hexagonal drive

TSD-M 1,2NM - Torque screwdriver

1212224

https://www.phoenixcontact.com/us/products/1212224

Torque screw driver, accuracy as per EN ISO 6789 standard, adjustable from 0.3 - 1.2 Nm

TSD-M SAC-BIT ADAPTER - Adapter insert

1212600

https://www.phoenixcontact.com/us/products/1212600

Adapter bit for TSD-M...torque tools, E6.3-1/4" drive with 4 mm hexagon to accommodate SAC bits

WIREFOX-D 40 - Stripping tool

1212161

https://www.phoenixcontact.com/us/products/1212161

Stripping tool, for stripping cables of 4.5 mm - 40 mm-Ø, insulation thickness of up to 4.5 mm, pivoting blade for round, lengthwise, and spiral cuts

MICROFOX-SB - Diagonal cutter

1212489

https://www.phoenixcontact.com/us/products/1212489

Electronic diagonal cutter, round head, without chamfer, with opening spring, mirror-polished and oiled, 2-component grip, cutting capacity: soft 0.2 - 2.0 mm; medium hard 1.2 mm; hard 0.5 mm diameter

VS-CABLE-STRIP-VARIO - Stripping tool

1657407

https://www.phoenixcontact.com/us/products/1657407

Stripping tool, for the multi-level stripping of shielded cables

Phoenix Contact 2024 © - all rights reserved
https://www.phoenixcontact.com

Phoenix Contact USA
586 Fulling Mill Road
Middletown, PA 17057, United States
(+717) 944-1300
info@phoenixcon.com