MACX MCR-EX-RTD-I-SP - Temperature measuring transducer

1050252

https://www.phoenixcontact.com/us/products/1050252

Please be informed that the data shown in this PDF document is generated from our online catalog. Please find the complete data in the user documentation. Our general terms of use for downloads are valid.



Ex i temperature transducer: converts signals from resistance temperature detectors installed in the Ex area and transmits a 0/4 - 20 mA signal to a load in the safe area. Freely programmable, 3-way isolation, SIL, Push-in connection, standard configuration.

Your advantages

- Power supply possible via DIN rail connector
- Programming during operation with Ex measuring circuit connected and also voltage-free using IFS-USB-PROG-ADAPTER programming adapter
- Input for resistance thermometers and resistance-type sensors, [Ex ia] IIC
- Installation in zone 2, protection type "ec" (EN 60079-7) permitted
- 3-way electrical isolation
- Status indicator for supply voltage, cable, sensor, and module errors
- Configuration via software (FDT/DTM): sensor type, connection technology, measuring range, measuring unit, filter, alarm signal, and output range
- Output: 0 mA ... 20 mA or 4 mA ... 20 mA

Commercial data

Item number	1050252
Packing unit	1 pc
Minimum order quantity	1 pc
Sales key	C430
Product key	CK3121
Catalog page	Page 146 (C-5-2019)
GTIN	4055626665160
Weight per piece (including packing)	181.1 g
Weight per piece (excluding packing)	150 g
Customs tariff number	85437090
Country of origin	DE

Technical data

Notes

Utilization restriction

EMC note	EMC: class A product, see manufacturer's declaration in the download area

Product properties

Product type	Temperature transmitter
Product family	MACX Analog
Application	Temperature
No. of channels	1
Type	Ex i signal conditioners with SIL functional safety
Configuration	Software

Insulation characteristics: GB Standard

Overvoltage category	II
Pollution degree	2

Electrical properties

Alignment span	± 5 %
Alignment zero	± 5 %
Electrical isolation	3-way isolation
Electrical isolation between input and output	yes
Step response (0–99%)	1 s
	≤ 1.7 s
Temperature coefficient, typical	0.01 %/K
Transmission error, typical	0.1 % (e.g. for Pt 100, 300 K span, 4 ... 20 mA)

Electrical isolation Input/output/power supply

Rated insulation voltage	300 V_{rms}
Test voltage	2.5 kV AC (50 Hz, 60 s)
Insulation	Safe isolation in accordance with IEC/EN 61010-1

Electrical isolation Input/output

Electrical isolation	375 V (Peak value in accordance with IEC/EN 60079-11)

Electrical isolation Input/power supply

Electrical isolation	375 V (Peak value in accordance with IEC/EN 60079-11)

Supply

Nominal supply voltage	24 V DC
Supply voltage range	19.2 V DC ... 30 V DC (24 V DC, -20 % ... +25 %)
Power dissipation	≤ 0.76 W

Power consumption	≤ 1 W

Input data

Signal

Number of inputs	1

Measurement

Description of the input	Intrinsically safe
Sensor types (RTD) that can be used	Pt, Ni, Cu sensors: 2, 3, 4-wire
Temperature measuring range	-200 °C ... 850 °C (Range depending on the sensor type)
Linear resistance measuring range	0 Ω ... 50 kΩ
Potentiometer resistance range	0 Ω ... 50 kΩ
Max. permissible overall conductor resistance	50 Ω (Per cable)
Sensor input current	10 µA ... 210 µA (Up to 2x 210 µA with 3-conductor technology)
Temperature measuring range	≥ 50 K

Output data

Signal: Current

Number of outputs	1
Configurable/programmable	Yes
Current output signal	0 mA ... 20 mA
	4 mA ... 20 mA (SIL)
Max. current output signal	≥ 21 mA
Load/output load current output	≤ 600 Ω
Output ripple (current)	< 15 μA_{PP}
	< 10 μA_{rms}
Behavior in the event of a sensor error	As per NE 43 or can be freely defined

Connection data

Connection method	Push-in connection
Stripping length	8 mm
Conductor cross section rigid	0.2 mm² ... 1.5 mm²
Conductor cross section flexible	0.2 mm² ... 1.5 mm²
Conductor cross section AWG	24 ... 16

Ex data

Ex installation (EPL)	Gc
	Div. 2
Ex i circuits (EPL)	Ga
	Da
	Ma
	Div. 1

Safety data: Terminals: 4.1, 4.2, 5.1, 5.2

Max. internal capacitance C_i	44 nF
Max. output voltage U_o	6 V
Max. output current I_o	16.6 mA (RTD in 4-conductor technology)
	13 mA (RTD in 3-conductor technology)
	7.1 mA (RTD in 2-conductor technology)
	16.6 mA (2x RTD in 2-conductor technology)
	13 mA (Potentiometer)
Max. output power P_o	25.2 mW (Linear)
Safety-related maximum voltage U_m	253 V AC
	125 V DC
	30 V DC (Zone 2: 3.1, 3.2)
IIA/I (simple circuit): Max. external inductivity L_o / Max. external capacitance C_o	850 mH / 1000 µF
IIB/IIIC (simple circuit): Max. external inductivity L_o / Max. external capacitance C_o	460 mH / 1000 µF
IIC (simple circuit): Max. external inductivity L_o / Max. external capacitance C_o	100 mH / 40 µF
IIB/IIA (mixed circuit): Max. external inductivity L_o / Max. external capacitance C_o	100 mH / 950 nF, 50 mH / 950 nF, 5 mH / 950 nF, 1 mH / 950 nF
IIIC/I (mixed circuit): Max. external inductivity L_o / Max. external capacitance C_o	100 mH / 950 nF, 50 mH / 950 nF, 5 mH / 950 nF, 1 mH / 950 nF
IIC (mixed circuit): Max. external inductivity L_o / Max. external capacitance C_o	100 mH / 555 nF, 50 mH / 555 nF, 5 mH / 555 nF, 1 mH / 555 nF, 10 µH / 555 nF

Signaling

Status display	Green LED (supply voltage)
	Red LED, flashing 2.4 Hz (cable error, sensor error on input or output, ERR)
	Red LED, flashing 1.2 Hz (service operation, ERR)
	Red LED, permanently on (module error, ERR)

Dimensions

Dimensional drawing	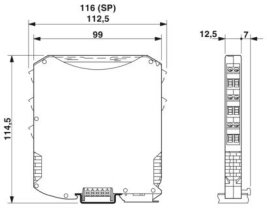
Width	12.5 mm
Height	116 mm
Depth	113.7 mm
Depth NS 35/7,5	114.5 mm (Snapped onto DIN rail NS 35/7,5 in accordance with EN 60715)

Material specifications

Color	gray (RAL 7042)
Flammability rating according to UL 94	V0 (Housing)
Housing material	PA 6.6-FR

Environmental and real-life conditions

Ambient conditions

Degree of protection	IP20
Ambient temperature (operation)	-40 °C ... 70 °C (Any mounting position)
Ambient temperature (storage/transport)	-40 °C ... 80 °C
Permissible humidity (operation)	5 % ... 95 % (non-condensing)

Altitude range (≤ 2000 m)

Altitude	≤ 2000 m (The technical data refers to altitudes ≤2000 m above mean sea level. For altitudes >2000 m above mean sea level, refer to the data sheet.)
Ambient temperature (operation)	-40 °C ... 70 °C
Test voltage	2.5 kV
Rated insulation voltage	300 V_{rms} (IEC/EN 60079-11)
	375 V_{PP} (IEC/EN 60079-11)

Altitude range (≤ 3000 m)

Height range	> 2000 m ... 3000 m
Ambient temperature (operation)	-40 °C ... 60 °C
Test voltage	2.25 kV
Safety-related maximum voltage U_m	190 V AC
	110 V DC
Rated insulation voltage	190 V_{rms} (IEC/EN 60079-11)

Altitude range (≤ 4000 m)

Height range	> 3000 m ... 4000 m
Ambient temperature (operation)	-40 °C ... 55 °C
Test voltage	2 kV
Safety-related maximum voltage U_m	60 V AC/DC
Rated insulation voltage	60 V_{rms} (IEC/EN 60079-11)

Altitude range (≤ 5000 m)

Height range	> 4000 m ... 5000 m
Ambient temperature (operation)	-40 °C ... 49 °C
Test voltage	1.75 kV
Safety-related maximum voltage U_m	60 V AC/DC
Rated insulation voltage	60 V_{rms} (IEC/EN 60079-11)

Approvals

CE

Certificate	CE-compliant
Note	and EN 61326

ATEX

Identification	Ⓔx I (M1) [Ex ia Ma] I
	Ⓔx II (1) G [Ex ia Ga] IIC
	Ⓔx II (1) D [Ex ia Da] IIIC
	Ⓔx II 3(1) G Ex ec ic [ia Ga] IIC T4 Gc
Certificate	IBExU19ATEX1006 X

UKCA Ex (UKEX)

Identification	Ⓔx I (M1) [Ex ia Ma] I
	Ⓔx II (1) G [Ex ia Ga] IIC
	Ⓔx II (1) D [Ex ia Da] IIIC
	Ⓔx II 3 (1) G Ex ec ic [ia Ga] IIC T4 Gc
Certificate	CML 22UKEX3531X

IECEx

Identification	[Ex ia Ma] I
	[Ex ia Ga] IIC
	[Ex ia Da] IIIC
	Ex ec ic [ia Ga] IIC T4 Gc
Certificate	IECEx IBE 19.0001 X

CCC / China-Ex

Identification	[Ex ia Ga] IIC
	[Ex iaD]
	Ex nA ic [ia Ga] IIC T4 Gc
Certificate	NEPSI GYJ20.1305X

UL, USA/Canada

Identification	UL 61010 Listed
	Class I Div 2; IS for Class I, II, III Div 1
Certificate	cULus C.D.-No 83104549

Shipbuilding approval

Certificate	DNV GL TAA00000AG

Safety Integrity Level (SIL, IEC 61508)

Identification	2
Certificate	SEBS-A.150520/17, V2.0

INMETRO

Identification	[Ex ia Ma] I
	[Ex ia Ga] IIC

	[Ex ia Da] IIIC
	Ex ec ic [ia Ga] IIC T4 Gc
Certificate	DNV 21.0064 X

DNV GL data

Temperature	B
Humidity	B
Vibration	A
EMC	B
Enclosure	Required protection according to the Rules shall be provided upon installation on board

EMC data

Noise immunity	EN 61000-6-2
Note	When being exposed to interference, there may be minimal deviations.
Electromagnetic compatibility	Conformance with EMC directive
Noise emission	EN 61000-6-4

Electromagnetic HF field

Designation	Electromagnetic RF field
Standards/regulations	EN 61000-4-3
Typical deviation from the measuring range final value	1 %

Fast transients (burst)

Designation	Fast transients (burst)
Standards/regulations	EN 61000-4-4
Typical deviation from the measuring range final value	1 %

Conducted interference

Designation	Conducted interferences
Standards/regulations	EN 61000-4-6
Typical deviation from the measuring range final value	1 %

Standards and regulations

Electrical isolation	3-way isolation

GB Standard

Standards/regulations	GB 3626.20
	GB 3836.1
	GB 3836.4
	GB 3836.8
	GB 12476.1
	GB 12476.4

Mounting

Mounting type	DIN rail mounting

Drawings

Block diagram

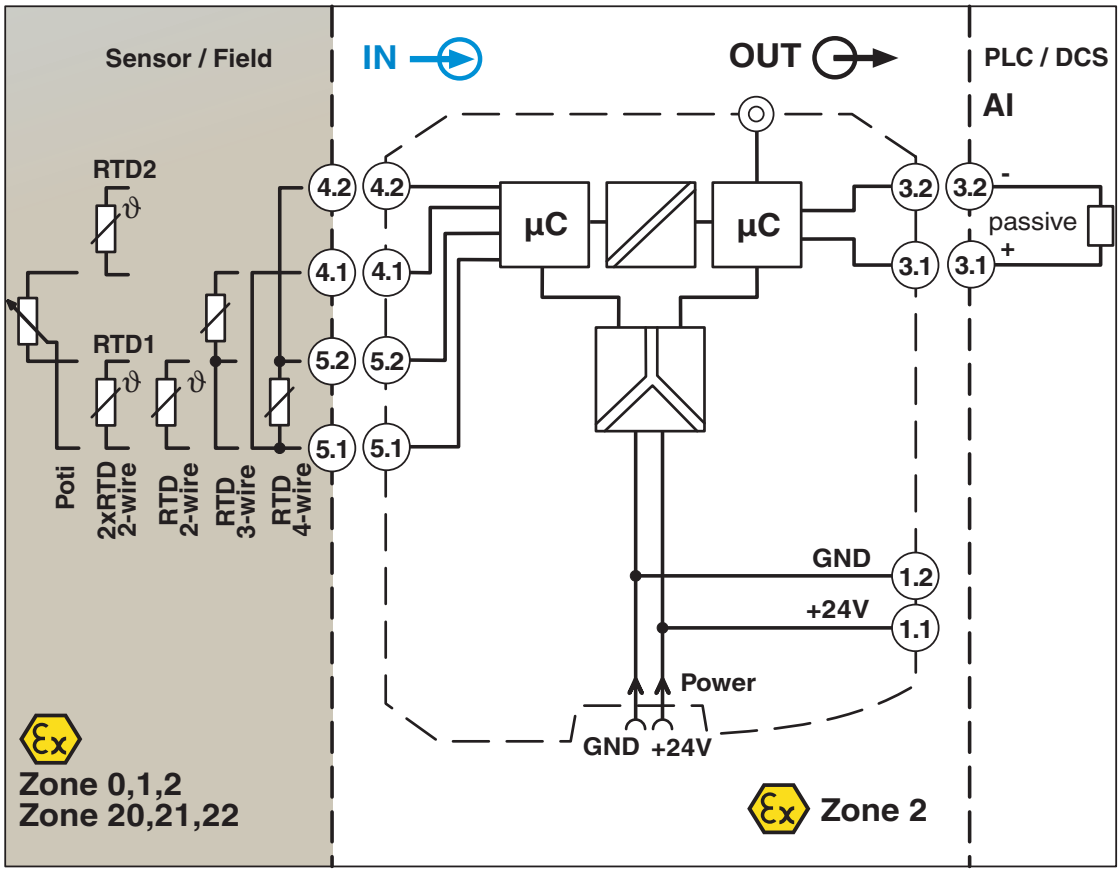

Dimensional drawing

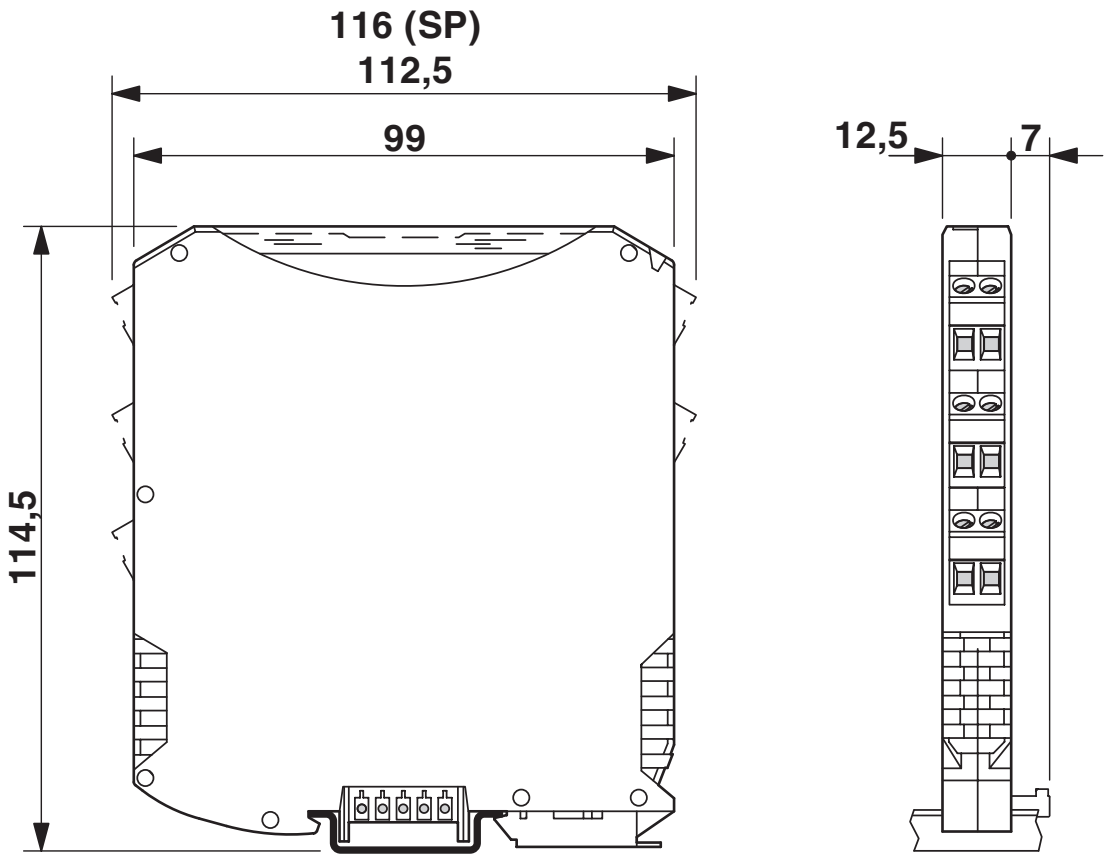

Approvals

To download certificates, visit the product detail page: https://www.phoenixcontact.com/us/products/1050252

DNV GL
Approval ID: TAA00000AG

UL Listed
Approval ID: FILE E 330267

cUL Listed
Approval ID: FILE E 330267

Functional Safety
Approval ID: SEBS-A.150520/17 V1

EAC Ex
Approval ID: RU C-DE.AB72.B.00093

cUL Listed
Approval ID: FILE E 199827

UL Listed
Approval ID: FILE E 199827

INMETRO
Approval ID: DNV 21.0064 X

cULus Listed

cULus Listed

Classifications

ECLASS

ECLASS-11.0	27210129
ECLASS-12.0	27210129
ECLASS-13.0	27210129

ETIM

ETIM 9.0	EC002919

UNSPSC

UNSPSC 21.0	41112100

Environmental product compliance

EU RoHS

Fulfills EU RoHS substance requirements	Yes
Exemption	7(a), 7(c)-I

China RoHS

Environment friendly use period (EFUP)	EFUP-50
	An article-related China RoHS declaration table can be found in the download area for the respective article under "Manufacturer declaration". For all articles with EFUP-E, no China RoHS declaration table issued and required.

EU REACH SVHC

REACH candidate substance (CAS No.)	Lead(CAS: 7439-92-1)
SCIP	5a1f108a-5788-4577-bce9-5aba93071a35

EF3.0 Climate Change

CO2e kg	0 kg CO2e

Accessories

ME 6,2 TBUS-2 1,5/5-ST-3,81 GY - DIN rail bus connectors

2695439

https://www.phoenixcontact.com/us/products/2695439

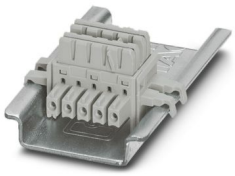

DIN rail connector (TBUS), 5-pos., for bridging the supply voltage, can be snapped onto NS 35/... DIN rail in accordance with EN 60715

TC-D37SUB-AIO16-EX-PS-UNI - Module carrier

2902932

https://www.phoenixcontact.com/us/products/2902932



Universal termination carrier for connecting 16 MACX Analog Ex i signal conditioners to digital or analog I/O cards, via D-SUB connector, 37-pos. (1:1 connection), with HART multiplexer connection

TC-D37SUB-ADIO16-EX-P-UNI - Module carrier

2924854

https://www.phoenixcontact.com/us/products/2924854



Universal termination carrier for connecting 16 MACX Analog Ex i signal conditioners to digital or analog I/O cards, via D-SUB connector, 37-pos. (1:1 connection)

IFS-USB-PROG-ADAPTER - Programming adapter

2811271

https://www.phoenixcontact.com/us/products/2811271



Programming adapter with USB interface, for programming with software. The USB driver is included in the software solutions for the products to be programmed, such as measuring transducers or motor managers.

IFS-BT-PROG-ADAPTER - Adapter

2905872

https://www.phoenixcontact.com/us/products/2905872



Bluetooth adapter with micro USB and S-PORT interface for wireless communication with the MINI Analog, MINI Analog Pro, MACX Analog, Interface System Gateways, and PLC logic device series.

MPS-IH WH - Insulating sleeve

0201663

https://www.phoenixcontact.com/us/products/0201663

Insulating sleeve, color: white



MPS-IH RD - Insulating sleeve

0201676

https://www.phoenixcontact.com/us/products/0201676

Insulating sleeve, color: red



MPS-IH BU - Insulating sleeve

0201689

https://www.phoenixcontact.com/us/products/0201689

Insulating sleeve, color: blue

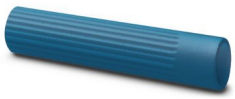

MPS-IH YE - Insulating sleeve

0201692

https://www.phoenixcontact.com/us/products/0201692

Insulating sleeve, color: yellow



MPS-IH GN - Insulating sleeve

0201702

https://www.phoenixcontact.com/us/products/0201702

Insulating sleeve, color: green



MPS-IH GY - Insulating sleeve

0201728

https://www.phoenixcontact.com/us/products/0201728

Insulating sleeve, color: gray



MPS-IH BK - Insulating sleeve

0201731

https://www.phoenixcontact.com/us/products/0201731

Insulating sleeve, color: black



MPS-MT - Test plug

0201744

https://www.phoenixcontact.com/us/products/0201744



Test plug, with solder connection up to 1 mm^2 conductor cross section, number of positions: 1, color: gray

UC-EMLP (11X9) - Plastic label

0819291

https://www.phoenixcontact.com/us/products/0819291



Plastic label, Sheet, white, unlabeled, can be labeled with: BLUEMARK ID COLOR, BLUEMARK ID, BLUEMARK CLED, PLOTMARK, CMS-P1-PLOTTER, mounting type: adhesive, lettering field size: 11 x 9 mm, Number of individual labels: 10

UC-EMLP (11X9) YE - Plastic label

0822602

https://www.phoenixcontact.com/us/products/0822602

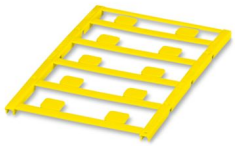

Plastic label, Sheet, yellow, unlabeled, can be labeled with: BLUEMARK ID COLOR, BLUEMARK ID, BLUEMARK CLED, PLOTMARK, CMS-P1-PLOTTER, mounting type: adhesive, lettering field size: 11 x 9 mm, Number of individual labels: 10

UC-EMLP (11X9) CUS - Plastic label

0824547

https://www.phoenixcontact.com/us/products/0824547



Plastic label, can be ordered: by sheet, white, labeled according to customer specifications, mounting type: adhesive, lettering field size: 11 x 9 mm

UC-EMLP (11X9) YE CUS - Plastic label

0824548

https://www.phoenixcontact.com/us/products/0824548

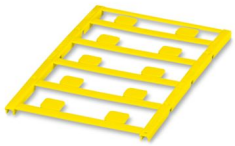

Plastic label, can be ordered: by sheet, yellow, labeled according to customer specifications, mounting type: adhesive, lettering field size: 11 x 9 mm

UC-EMLP (11X9) SR - Plastic label

0828094

https://www.phoenixcontact.com/us/products/0828094



Plastic label, Sheet, silver, unlabeled, can be labeled with: BLUEMARK ID COLOR, BLUEMARK ID, BLUEMARK CLED, PLOTMARK, CMS-P1-PLOTTER, mounting type: adhesive, lettering field size: 11 x 9 mm, Number of individual labels: 10

UC-EMLP (11X9) SR CUS - Plastic label

0828098

https://www.phoenixcontact.com/us/products/0828098



Plastic label, can be ordered: by sheet, silver, labeled according to customer specifications, mounting type: adhesive, lettering field size: 11 x 9 mm, Number of individual labels: 10

US-EMLP (11X9) - Plastic label

0828789

https://www.phoenixcontact.com/us/products/0828789



Plastic label, Card, white, unlabeled, can be labeled with: BLUEMARK ID COLOR, BLUEMARK ID, THERMOMARK PRIME, THERMOMARK CARD 2.0, THERMOMARK CARD, mounting type: adhesive, lettering field size: 11 x 9 mm, Number of individual labels: 135

US-EMLP (11X9) YE - Plastic label

0828871

https://www.phoenixcontact.com/us/products/0828871



Plastic label, Card, yellow, unlabeled, can be labeled with: BLUEMARK ID COLOR, BLUEMARK ID, THERMOMARK PRIME, THERMOMARK CARD 2.0, THERMOMARK CARD, mounting type: adhesive, lettering field size: 11 x 9 mm, Number of individual labels: 135

US-EMLP (11X9) SR - Plastic label

0828872

https://www.phoenixcontact.com/us/products/0828872



Plastic label, Card, silver, unlabeled, can be labeled with: BLUEMARK ID COLOR, BLUEMARK ID, THERMOMARK PRIME, THERMOMARK CARD 2.0, THERMOMARK CARD, mounting type: adhesive, lettering field size: 11 x 9 mm, Number of individual labels: 135

LS-EMLP (11X9) WH - Device marker

0831678

https://www.phoenixcontact.com/us/products/0831678

Device marker, Sheet, white, unlabeled, can be labeled with: TOPMARK NEO, TOPMARK LASER, mounting type: adhesive, lettering field size: 11 x 9 mm, Number of individual labels: 255

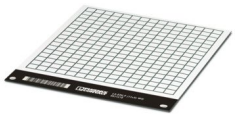

LS-EMLP (11X9) SR - Device marker

0831705

https://www.phoenixcontact.com/us/products/0831705

Device marker, Sheet, silver, unlabeled, can be labeled with: TOPMARK NEO, TOPMARK LASER, mounting type: adhesive, lettering field size: 11 x 9 mm, Number of individual labels: 255

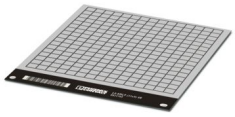

LS-EMLP (11X9) YE - Device marker

0831732

https://www.phoenixcontact.com/us/products/0831732

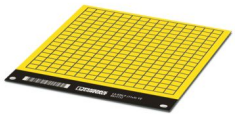

Device marker, Sheet, yellow, unlabeled, can be labeled with: TOPMARK NEO, TOPMARK LASER, mounting type: adhesive, lettering field size: 11 x 9 mm, Number of individual labels: 255

MACX MCR-PTB - Power and error message module

2865625

https://www.phoenixcontact.com/us/products/2865625



Power and fault signaling module with screw connection, including corresponding ME 17,5 TBUS 1,5/ 5-ST-3,81 GY DIN rail connector

MACX MCR-EX-RTD-I-SP - Temperature measuring transducer

1050252

https://www.phoenixcontact.com/us/products/1050252

MACX MCR-PTB-SP - Power and error message module

2924184

https://www.phoenixcontact.com/us/products/2924184



Power and fault signaling module with Push-in connection, including corresponding ME 17,5 TBUS 1,5/ 5-ST-3,81 GY DIN rail connector

QUINT4-SYS-PS/1AC/24DC/2.5/SC - Power supply unit

2904614

https://www.phoenixcontact.com/us/products/2904614



Primary-switched power supply, QUINT POWER, screw connection, DIN rail mounting, supply of devices possible via the TBUS DIN rail connector, protective coating, input: single-phase, output: 24 V DC/2.5 A

MACX MCR-EX-RTD-I-SP - Temperature measuring transducer

1050252

https://www.phoenixcontact.com/us/products/1050252

SZS 0,6X3,5 - Screwdriver

1205053

https://www.phoenixcontact.com/us/products/1205053



Actuation tool, for ST terminal blocks, insulated, also suitable for use as a bladed screwdriver, size: 0.6 x 3.5 x 100 mm, 2-component grip, with non-slip grip

Phoenix Contact 2024 © - all rights reserved
https://www.phoenixcontact.com

Phoenix Contact USA
586 Fulling Mill Road
Middletown, PA 17057, United States
(+717) 944-1300
info@phoenixcon.com