May.1.2024 Copyright 2024 HIROSE ELECTRIC CO., LTD. All Rights Reserved.
In case of consideration for using Automotive equipment / device which demand high reliability, kindly contact our sales window

	△数 COUNT	訂正事項 DESCRIPTION OF REVISIONS	擔當 B Y	檢圖 CHKD	年月日 DATE		△数 COUNT	訂正事項 DESCRIPTION OF REVISIONS	擔當 B Y	檢圖 CHKD	年月日 DATE
△1	1	RE-6-1150	K.I.Y	L.S.M	18. 07. 04	△					. .
△2	1	RE-6-1579	K.I.Y	L.S.M	20. 01. 23	△					. .
△					. .	△					. .

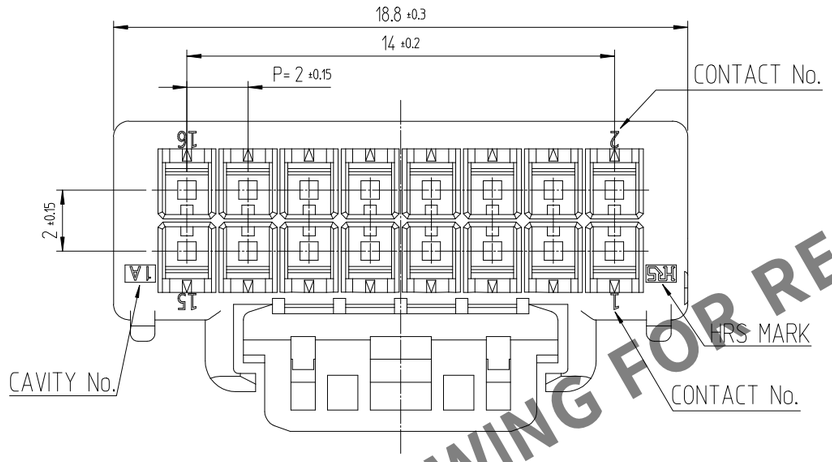

HRS DRAWING FOR REFERENCE

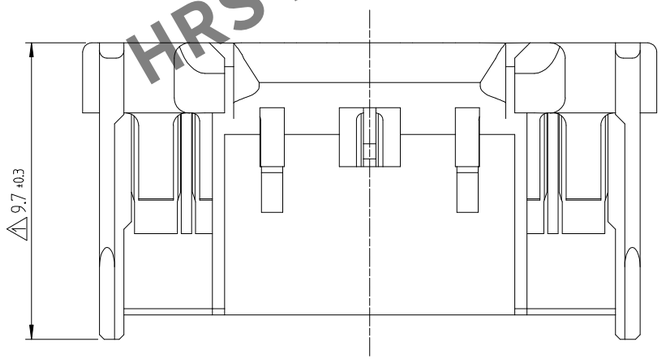

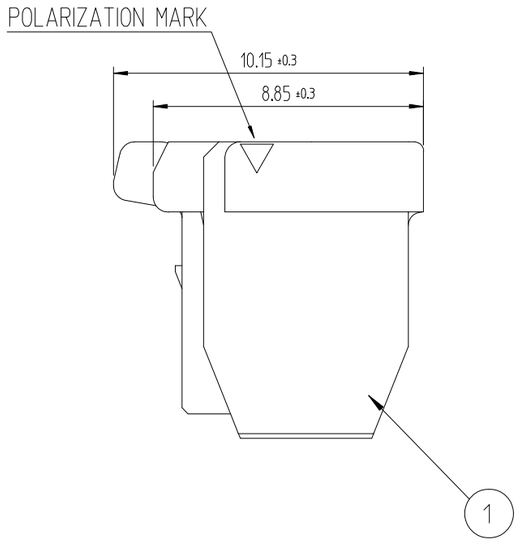

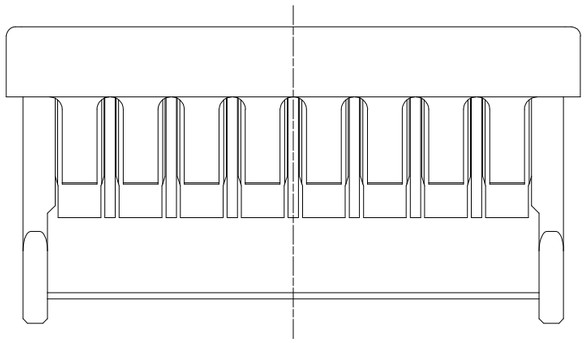

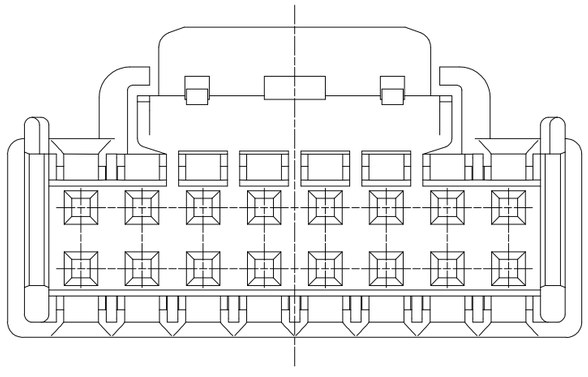

NOTE 1. 1PACK CONTAINS 100PCS.
△2. UL(File No. E132750) AUTHORIZATION ARTICLE.
C-UL(File No. E132750) AUTHORIZATION ARTICLE.

c UL us

NO.	MATERIAL	FINISH,REMARKS
1	PBT	UL94V-0, BLACK

CODE NO. (OLD)	DRAWN	DESIGNED	CHECKED	APPROVED	RELEASED
	CHOI 17.12.22 J.S	CHOI 17.12.22 J.S	LIM 17.12.22 S.M	KANG 17.12.22 T.S	ENG 20. 02. 12 DEPT

SCALE	DRAWING NO.	PART NO.
5:1	EDC3-632497	DF51K-16DS-2C (800)
UNITS mm	HRS HIROSE KOREA CO.,LTD.	CODE NO. CL 6652-0031-2-800 1/1