SIEMENS

Data sheet 3RV2021-4BA10-0BA0



Special type Circuit breaker size S0 for motor protection, CLASS 10 A-release 13...20 A N-release 260 A screw terminal Standard switching capacity Ambient temperature -50 °C 500 switching cycles

product brand name	SIRIUS
product designation	Circuit breaker
design of the product	For motor protection
product type designation	3RV2
General technical data	
size of the circuit-breaker	S0
size of contactor can be combined company-specific	S00, S0
product extension auxiliary switch	Yes
power loss [W] for rated value of the current	
● at AC in hot operating state	10.5 W
● at AC in hot operating state per pole	3.5 W
insulation voltage with degree of pollution 3 at AC rated value	690 V
surge voltage resistance rated value	6 kV
shock resistance according to IEC 60068-2-27	25g / 11 ms
mechanical service life (operating cycles)	
● of the main contacts typical	500
● of auxiliary contacts typical	500
electrical endurance (operating cycles) typical	500
reference code according to IEC 81346-2	Q
Substance Prohibitance (Date)	10/01/2009
Ambient conditions	
installation altitude at height above sea level maximum	2 000 m
ambient temperature	
● during operation	-50 ... +60 °C
● during storage	-50 ... +80 °C
● during transport	-50 ... +80 °C
relative humidity during operation	10 ... 95 %
Main circuit	
number of poles for main current circuit	3
adjustable current response value current of the current-dependent overload release	13 ... 20 A
operating voltage	
● rated value	20 ... 690 V
● at AC-3 rated value maximum	690 V
operating frequency rated value	50 ... 60 Hz
operational current rated value	20 A
operational current	
● at AC-3 at 400 V rated value	20 A
operating power	
● at AC-3	

Subject to change without notice
© Copyright Siemens

— at 230 V rated value	5.5 kW
— at 400 V rated value	7.5 kW
— at 500 V rated value	11 kW
— at 690 V rated value	15 kW
operating frequency	
● at AC-3 maximum	15 1/h
Auxiliary circuit	
number of NC contacts for auxiliary contacts	0
number of NO contacts for auxiliary contacts	0
number of CO contacts for auxiliary contacts	0
Protective and monitoring functions	
product function	
● ground fault detection	No
● phase failure detection	Yes
trip class	CLASS 10
design of the overload release	thermal
maximum short-circuit current breaking capacity (Icu)	
● at AC at 240 V rated value	100 kA
● at AC at 400 V rated value	55 kA
● at AC at 500 V rated value	10 kA
● at AC at 690 V rated value	4 kA
operating short-circuit current breaking capacity (Ics) at AC	
● at 240 V rated value	100 kA
● at 400 V rated value	25 kA
● at 500 V rated value	5 kA
● at 690 V rated value	2 kA
response value current of instantaneous short-circuit trip unit	260 A
Short-circuit protection	
product function short circuit protection	Yes
design of the short-circuit trip	magnetic
design of the fuse link for IT network for short-circuit protection of the main circuit	
● at 400 V	gG 63 A
● at 500 V	gG 50 A
● at 690 V	gG 50 A
Installation/ mounting/ dimensions	
mounting position	any
fastening method	screw and snap-on mounting onto 35 mm DIN rail according to DIN EN 60715
height	97 mm
width	45 mm
depth	97 mm
required spacing	
● with side-by-side mounting at the side	0 mm
● for grounded parts at 400 V	
— downwards	30 mm
— upwards	30 mm
— at the side	9 mm
● for live parts at 400 V	
— downwards	30 mm
— upwards	30 mm
— at the side	9 mm
● for grounded parts at 500 V	
— downwards	30 mm
— upwards	30 mm
— at the side	9 mm
● for live parts at 500 V	
— downwards	30 mm
— upwards	30 mm
— at the side	9 mm
● for grounded parts at 690 V	
— downwards	50 mm

Subject to change without notice
© Copyright Siemens

— upwards	50 mm
— backwards	0 mm
— at the side	30 mm
— forwards	0 mm
● for live parts at 690 V	
— downwards	50 mm
— upwards	50 mm
— backwards	0 mm
— at the side	30 mm
— forwards	0 mm

Connections/ Terminals

type of electrical connection	
● for main current circuit	screw-type terminals
arrangement of electrical connectors for main current circuit	Top and bottom
type of connectable conductor cross-sections	
● for main contacts	
— solid or stranded	2x (1 ... 2.5 mm²), 2x (2.5 ... 10 mm²)
— finely stranded with core end processing	2x (1 ... 2.5 mm²), 2x (2.5 ... 6 mm²), 1x 10 mm²
tightening torque	
● for main contacts with screw-type terminals	2 ... 2.5 N·m
design of screwdriver shaft	Diameter 5 to 6 mm
size of the screwdriver tip	Pozidriv size 2
design of the thread of the connection screw	
● for main contacts	M4

Safety related data

T1 value for proof test interval or service life according to IEC 61508	10 a
protection class IP on the front according to IEC 60529	IP20
touch protection on the front according to IEC 60529	finger-safe, for vertical contact from the front
display version for switching status	Handle

Certificates/ approvals

General Product Approval			Declaration of Conformity		Test Certificates
Confirmation	KC	EAC	UKCA	CE EG-Konf.	Special Test Certific-ate

Test Certificates	Marine / Shipping				
Type Test Certific-ates/Test Report	ABS	BUREAU VERITAS	DNV	Lloyd's Register LRS	PRS

Marine / Shipping	other		Railway	
RINA	Confirmation	VDE	Vibration and Shock	Confirmation

Further information

Siemens has decided to exit the Russian market (see here).
https://press.siemens.com/global/en/pressrelease/siemens-wind-down-russian-business
Siemens is working on the renewal of the current EAC certificates.
Please contact your local Siemens office on the status of validity of the EAC certification if you intend to import or offer to supply these products to an EAC relevant market (other than the sanctioned EAEU member states Russia or Belarus).
Information on the packaging
https://support.industry.siemens.com/cs/ww/en/view/109813875
Information- and Downloadcenter (Catalogs, Brochures,…)
https://www.siemens.com/ic10

© Copyright Siemens

Industry Mall (Online ordering system)
https://mall.industry.siemens.com/mall/en/en/Catalog/product?mlfb=3RV2021-4BA10-0BA0
Cax online generator
http://support.automation.siemens.com/WW/CAXorder/default.aspx?lang=en&mlfb=3RV2021-4BA10-0BA0
Service&Support (Manuals, Certificates, Characteristics, FAQs,...)
https://support.industry.siemens.com/cs/ww/en/ps/3RV2021-4BA10-0BA0
Image database (product images, 2D dimension drawings, 3D models, device circuit diagrams, EPLAN macros, ...)
http://www.automation.siemens.com/bilddb/cax_de.aspx?mlfb=3RV2021-4BA10-0BA0&lang=en
Characteristic: Tripping characteristics, I²t, Let-through current
https://support.industry.siemens.com/cs/ww/en/ps/3RV2021-4BA10-0BA0/char
Further characteristics (e.g. electrical endurance, switching frequency)
http://www.automation.siemens.com/bilddb/index.aspx?view=Search&mlfb=3RV2021-4BA10-0BA0&objecttype=14&gridview=view1

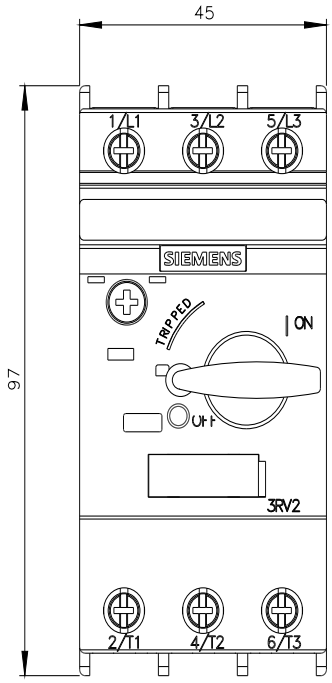

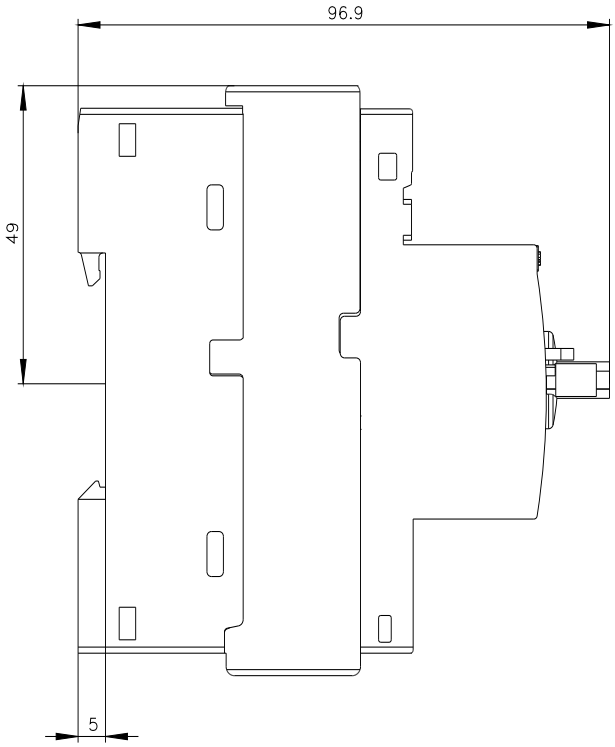

Subject to change without notice
© Copyright Siemens

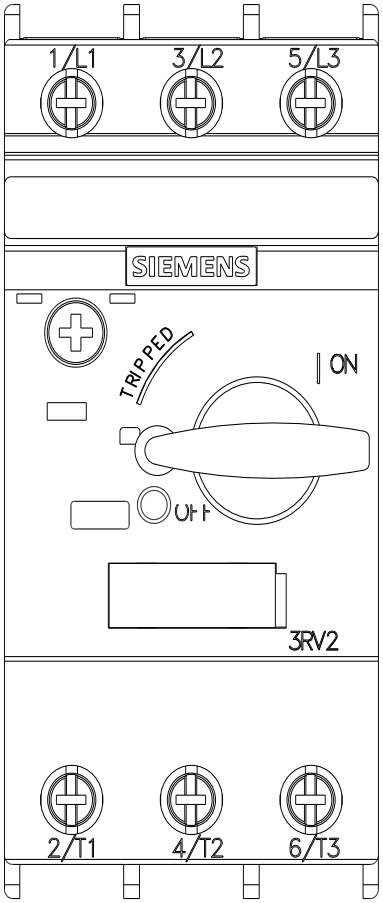

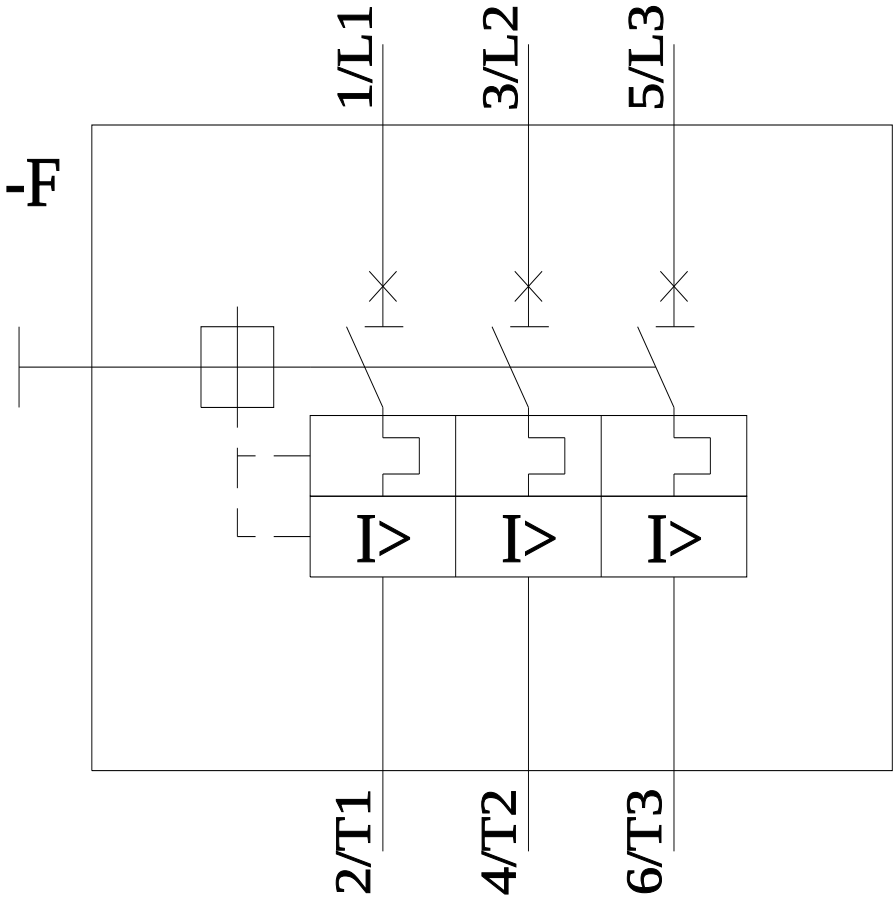

last modified: 11/21/2022

Subject to change without notice
© Copyright Siemens