HEP.2M.312.XLNP



Summary

Request a quote

Catalog

Number of contacts Low Voltage	12
Gender	Standard
Socket / Receptacle	Socket / Receptacle - Fixed Panel Rear Mounted
Locking system	Ratchet
Size	2M
Matching parts	FMP.2M.312.XLC
Series	M - Rugged Ratchet coupling

Technical details

LEMO products and services are provided “as is”. LEMO makes no warranties or representations with regard to LEMO product & services or use of them, express, implied or statutory, including for accuracy, completeness, or security. The user is fully responsible for his products and applications using LEMO components.

Electrical Configuration

Contact Termination Low voltage	PCB - Straight
R (max)	6.1 mOhm
Insert configuration value	2M.312 - 12 Low Voltage
Insulator	L: PEEK
Rated current	7 Amps
Test voltage (kV rms) Contact-contact	1.65
Test voltage (kV rms) Contact-shell	1.15
Contact Type	Print (straight)
Contact Dia.	0.7 mm (0.028in)
Number of contacts Low Voltage	12
Gender	Standard

Form & Material

Shell style / Model id	HE - Fixed receptacle, nut fixing for printed circuit, watertight
Socket / Receptacle	Fixed Panel Rear Mounted
Housing material	Aluminium (nickel plated [SAE AMS QQ N 290], anthracite color) shell and nut, other pieces bronze/brass
Locking system	Ratchet
Keying	3 keys (beta=150, gamma=60, plug: male contacts, receptacle: female contacts)
Variant	Watertight unmated (connector to device)
Weight	9.94 g

Environment

Technical domain	Motorsport, Security and Defence, Transportation, Aerospace and UAV
Environmental sealing (IP rating)	IP68
Temperature range	-20°C / +80°C
EMI Shielding EIA 364-66A	>= 80 dB (1 GHz), >=70 dB (3 GHz), >= 58 dB (6 GHz), >= 40 dB (10 GHz)
Gunfire vibration	25 Hz - 2000 Hz, 3 axis (Apache helicopter)
Humidity (max)	21 days at 95%
Lighting strike EIA 364-76	10K amps - 6 times
Shock Resistance	300 g [3 ms]
Vibration-Random	37.8 g rms - 3 axes, 4 hr amb [50 Hz - 2000 Hz]
Vibration-Sine	30 g, 3 axes, 12 hr [10 Hz - 2000 Hz]
Salt Spray Corrosion	max. 48 hr

LEMO products and services are provided “as is”. LEMO makes no warranties or representations with regard to LEMO product & services or use of them, express, implied or statutory, including for accuracy, completeness, or security. The user is fully responsible for his products and applications using LEMO components.

Drawings



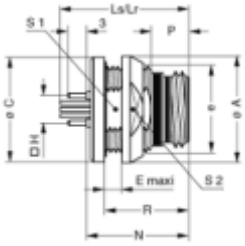

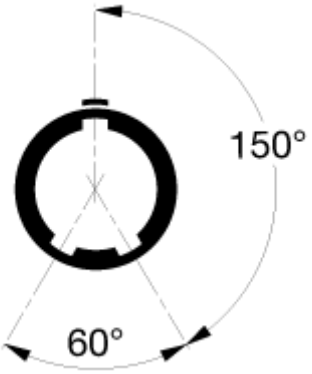

Dimensions

	A	C	e	E	H	Ls	Lr	N	P	R	S1	S2
mm.	21	20.8	M17x1.00	5	8.89	20.8	21	16.8	5.3	13.8	15.5	18
in.	0.83	0.82		0.2	0.35	0.82	0.83	0.66	0.21	0.54	0.61	0.71

LEMO products and services are provided “as is”. LEMO makes no warranties or representations with regard to LEMO product & services or use of them, express, implied or statutory, including for accuracy, completeness, or security. The user is fully responsible for his products and applications using LEMO components.