SACC-M12MRB-2PL SH PB - Data connector

1424679

https://www.phoenixcontact.com/us/products/1424679

Please be informed that the data shown in this PDF document is generated from our online catalog. Please find the complete data in the user documentation. Our general terms of use for downloads are valid.



Data connector, PROFIBUS DP (12 Mbps), 2-position, shielded, Plug angled M12, coding: B, Push-lock spring connection, knurl material: Zinc die-cast, nickel-plated, external cable diameter 4 mm ... 8 mm

Your advantages

- Time-saving Push-Lock connection: Tool-free connection and disconnection of conductors by opening the contact levers
- Intuitive connection: Easy assignment of individual litz wires with color-coded and numerical identification of the contact levers
- Integrated Push-in Technology: Wire rigid and pretreated conductors easily by means of simple, direct insertion
- Shock- and vibration-resistant connection: Proven spring-cage technology guarantees secure and reliable contacting
- Safely shielded: Reliable 360° shield connection even under extreme mechanical strain
- Flexible cable outlets with angled connectors

Commercial data

Item number	1424679
Packing unit	1 pc
Minimum order quantity	1 pc
Sales key	BF33
Product key	BF2CFC
Catalog page	Page 422 (C-2-2019)
GTIN	4055626376066
Weight per piece (including packing)	38.6 g
Weight per piece (excluding packing)	38.6 g
Customs tariff number	85366990
Country of origin	DE

Technical data

Notes

Assembly note	NOTE: Observe the permissible bending radii when laying conductors, since the degree of protection may be put in jeopardy if the bending forces are too high. Alleviate mechanical loads upstream of the connector, e.g. by using cable ties.

Mounting

Assembly note	The connector pin assignment can be rotated 45° to the cable outlet
	The wires can be connected both with ferrules and without ferrules

Product properties

Product type	Circular connector (cable-side)
Application	Data
Sensor type	PROFIBUS DP
Number of positions	2
No. of cable outlets	1
Shielded	yes
Coding	B
Cable outlet	angled

Insulation characteristics

Overvoltage category	II
Degree of pollution	3

Dimensions

Dimensional drawing	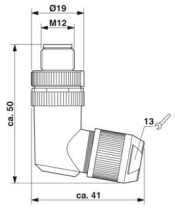
Length	50 mm

External dimensions

Outside diameter	4 mm ... 8 mm

Housing

Diameter housing	19 mm

Material specifications

Material	TPE-U

	PA 6
Flammability rating according to UL 94	V0
Seal material	NBR
Material of grip body	Zinc die-cast, nickel-plated
Contact material	CuSn
Contact surface material	Ni/Au
Contact carrier material	PA 6.6
Material for screw connection	Zinc die-cast, nickel-plated
Standards/regulations	PA 6.6: Fire protection in rail vehicles - requirement sets R22, R23, R24, R25, and R26 acc. to DIN EN 45545-2 (Risk level HL1 - HL3)
	PA 6: Fire protection in rail vehicles - requirement sets R22, R23, and R24 acc. to DIN EN 45545-2 (Risk level HL1 - HL3)

Connection data

Conductor connection

Connection method	Push-lock spring connection
Connection cross section	0.14 mm² ... 0.75 mm² (without ferrule)
	0.08 mm² ... 0.5 mm² (with ferrule)
	0.14 mm² ... 0.75 mm² (solid)
Connection cross section AWG	26 ... 18 (without ferrule)
	28 ... 20 (with ferrule)
Stripping length of the individual wire	7 mm
Tightening torque	0.4 Nm (M12 knurl)
	0.8 Nm (Connector with coupling sleeve)
	3 Nm (Pressure nut with coupling sleeve)

Pin assignment

Contact | Color (signal designation) | Contact (optional)	2 = GN (A)
	4 = RD (B)

Electrical properties

Rated surge voltage	1.5 kV
Contact resistance	≤ 5 mΩ
Insulation resistance	≥ 100 MΩ
Nominal voltage U_N	48 V AC
	60 V DC
Nominal current I_N	4 A (2 A when using 0.14 mm² conductors)

Mechanical properties

Mechanical data

Insertion/withdrawal cycles	≥ 100

Connector

Connection 1

Head design	Plug
Head cable outlet	angled
Head thread type	M12
Coding	B

Cable/line

Signal type/category	PROFIBUS DP, 12 Mbps
Stripping length of the individual wire	7 mm

Environmental and real-life conditions

Ambient conditions

Degree of protection	IP65
	IP67
Ambient temperature (operation)	-40 °C ... 85 °C (Plug / socket)

Standards and regulations

Testing

Standards/regulations	PA 6.6: Fire protection in rail vehicles - requirement sets R22, R23, R24, R25, and R26 acc. to DIN EN 45545-2 (Risk level HL1 - HL3)
	PA 6: Fire protection in rail vehicles - requirement sets R22, R23, and R24 acc. to DIN EN 45545-2 (Risk level HL1 - HL3)

M12

Standard designation	M12 connector
Standards/specifications	IEC 61076-2-101
Standard designation	Shock, vibration
Standards/specifications	EN 50155:2001

Drawings

Dimensional drawing

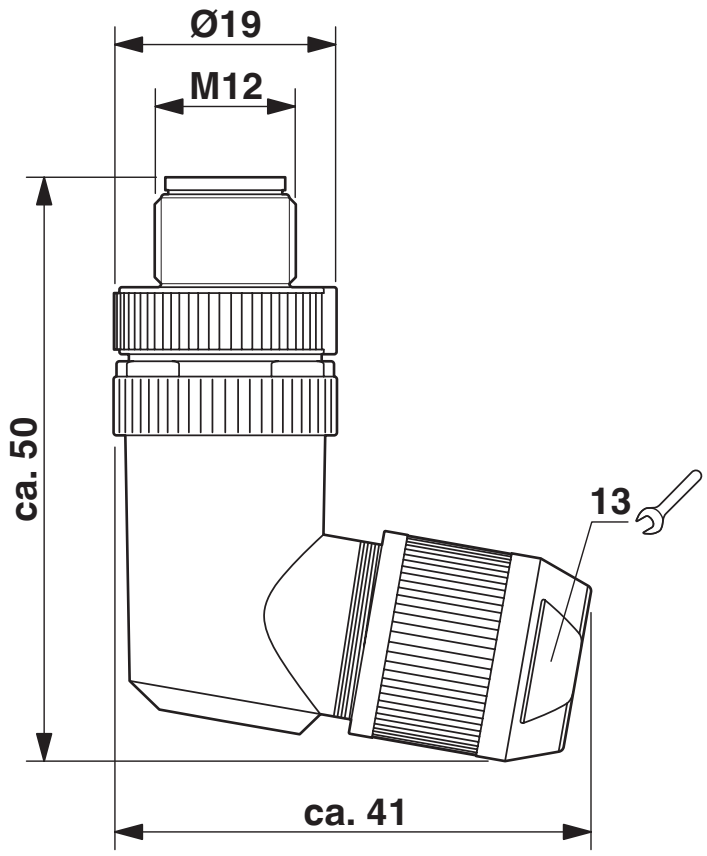

Plug M12 SPEEDCON, angled, shielded

Schematic diagram

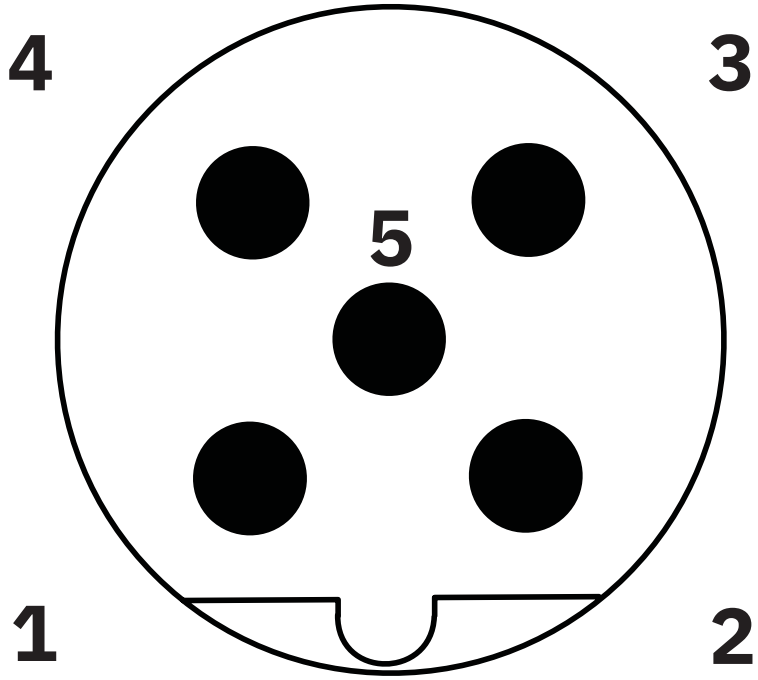

Pin assignment M12 male connector, 5-pos., B-coded, male side

Functional drawing

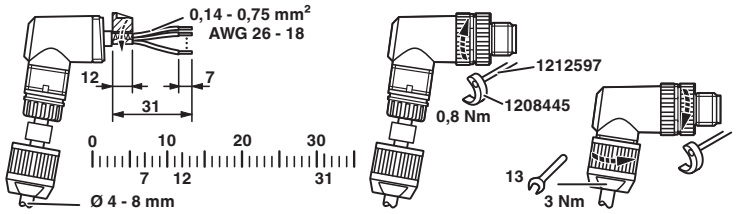

Slide the pressure nut and sleeve housing along the cable, strip the cable, shorten the shield, strip the single wires, connect the wires, in the case of a straight sleeve housing gently twist the wires together, stick the shielding foil around the shortened shield, in the case of a cable outside diameter < 6 mm stick an additional shielding foil around the wire pack, screw the sleeve housing to the plug insert, screw the pressure nut tight.

Approvals

To download certificates, visit the product detail page: https://www.phoenixcontact.com/us/products/1424679

EAC
Approval ID: RU C-DE.BL08.B.00511

UL Listed
Approval ID: E221474

	Nominal voltage U_N	Nominal current I_N	Cross section AWG	Cross section mm^2
	60 V	4 A	-	26 - 18

cUL Listed
Approval ID: E221474

	Nominal voltage U_N	Nominal current I_N	Cross section AWG	Cross section mm^2
	60 V	4 A	26 - 18	-

cULus Listed

Classifications

ECLASS

ECLASS-11.0	27440102
ECLASS-12.0	27440116
ECLASS-13.0	27440116

ETIM

ETIM 9.0	EC002635

UNSPSC

UNSPSC 21.0	39121400

Environmental product compliance

EU RoHS

Fulfills EU RoHS substance requirements	Yes, No exemptions

China RoHS

Environment friendly use period (EFUP)	EFUP-E
	No hazardous substances above the limits

EU REACH SVHC

REACH candidate substance (CAS No.)	No substance above 0.1 wt%

Accessories

PROT-M12 FS-PA-CHAIN - Sealing cap

1430873

https://www.phoenixcontact.com/us/products/1430873

M12 sealing cap made of plastic with fixing band, for sensor cables, for free M12 plugs



SAC-2P-910/... - Bus system cable

1511491

https://www.phoenixcontact.com/us/products/1511491

Bus system cable, PROFIBUS, 2-position, PUR halogen-free, red lilac RAL 4001, shielded, free cable end, on free cable end, cable length: Free entry (0.5 ... 400 m)



ALU-SB - Shielding foil

1404531

https://www.phoenixcontact.com/us/products/1404531

Shielding foil, for fixing the braided shield of shielded cables. Length: 4 cm, width: 1.2 cm



AI 0,25- 6 YE - Ferrule

3203024

https://www.phoenixcontact.com/us/products/3203024

Ferrule, sleeve length: 6 mm, color: yellow



A 0,25- 7 - Ferrule

3202478

https://www.phoenixcontact.com/us/products/3202478



Ferrule, color: silver

A 0,34- 7 - Ferrule

3009202

https://www.phoenixcontact.com/us/products/3009202



Ferrule, color: silver

A 0,5 - 6 - Ferrule

3200218

https://www.phoenixcontact.com/us/products/3200218



Ferrule, color: silver

AI 0,5 - 6 WH - Ferrule

3200687

https://www.phoenixcontact.com/us/products/3200687



Ferrule, sleeve length: 6 mm, color: white

TSD 04 SAC - Torque screwdriver

1208429

https://www.phoenixcontact.com/us/products/1208429



Torque screwdriver, with preset torque of 0.4 Nm and 4 mm hexagonal drive for M12 connectors

TSD 08 SAC - Torque screwdriver

1212597

https://www.phoenixcontact.com/us/products/1212597



Torque screw driver with preset torque of 0.8 Nm, with 4 mm hexagon for accommodating SAC bits, two-component handle with non-slip grip

SACC BIT M12-D20 - Tool

1208445

https://www.phoenixcontact.com/us/products/1208445



Nut for assembling M12 connectors for assembly with a knurl diameter of 20 mm, for 4 mm hexagonal drive

TSD-M 1,2NM - Torque screwdriver

1212224

https://www.phoenixcontact.com/us/products/1212224



Torque screw driver, accuracy as per EN ISO 6789 standard, adjustable from 0. 3 - 1.2 Nm

TSD-M 3NM - Torque screwdriver

1212225

https://www.phoenixcontact.com/us/products/1212225



Torque screw driver, accuracy as per EN ISO 6789 standard, adjustable from 1. 2 - 3 Nm

TSD-M SAC-BIT ADAPTER - Adapter insert

1212600

https://www.phoenixcontact.com/us/products/1212600



Adapter bit for TSD-M...torque tools, E6.3-1/4" drive with 4 mm hexagon to accommodate SAC bits

VS-CABLE-STRIP-VARIO - Stripping tool

1657407

https://www.phoenixcontact.com/us/products/1657407

Stripping tool, for the multi-level stripping of shielded cables



WIREFOX 2,5 - Stripping tool

1212368

https://www.phoenixcontact.com/us/products/1212368



Stripping tool, for conductors and cables with a conductor cross section from 0. 08 to 2.5 mm, self-adjusting, stripping length adjustable up to 15 mm, cutting capacity up to 6 mm^2 stranded/1.5 mm^2 solid

CRIMPFOX 6H - Crimping pliers

1212046

https://www.phoenixcontact.com/us/products/1212046



Crimping pliers, for ferrules without insulating collar according to DIN 46228 Part 1 and ferrules with insulating collar according to DIN 46228 Part 4, 0.14 mm^2 ... 6 mm^2, unlockable pressure lock, lateral entry

Phoenix Contact 2024 © - all rights reserved
https://www.phoenixcontact.com

Phoenix Contact USA
586 Fulling Mill Road
Middletown, PA 17057, United States
(+717) 944-1300
info@phoenixcon.com