ANT-DIR-2459-01 - Antenna

2701186

https://www.phoenixcontact.com/us/products/2701186

Please be informed that the data shown in this PDF document is generated from our online catalog. Please find the complete data in the user documentation. Our general terms of use for downloads are valid.



Directional antenna for wall or mast mounting, 2.4 GHz / 5 GHz, gain: 9 dBi, degree of protection: IP67, shockproof: IK06, saltwater-resistant, connection: N (female), incl. mounting bracket and mast clamps, ATEX and IECEx approval

Your advantages

- Ideally suited for stationary or linear mobile applications with 2.4 GHz or 5 GHz
- For use in potentially explosive areas
- Salt water resistant
- Impact-resistant housing (IK08)

Commercial data

Item number	2701186
Packing unit	1 pc
Minimum order quantity	1 pc
Sales key	DN23
Product key	DNN2Z1
Catalog page	Page 389 (C-6-2019)
GTIN	4046356717182
Weight per piece (including packing)	457 g
Weight per piece (excluding packing)	210 g
Customs tariff number	85177100
Country of origin	PL

Technical data

Notes

Note on application	Only for industrial use

Utilization restriction

CCCex note	Use in potentially explosive areas is not permitted in China.

Product properties

Product type	Antenna
Scope of delivery	included mounting bracket and mast clamps
Radiation characteristics	Directional
Gain	9 dBi
Vertical beamwidth	55 ° (2.4 GHz ... 2.5 GHz)
	55 ° (5.1 GHz ... 5.9 GHz)
Horizontal beamwidth	75 ° (2.4 GHz ... 2.5 GHz)
	55 ° (5.1 GHz ... 5.9 GHz)
Polarization	Linear vertical

Electrical properties

Frequency band	2.4 GHz
	5 GHz
Frequency range	2.4 GHz ... 2.5 GHz
	5.15 GHz ... 5.83 GHz
Impedance	50 Ω
Maximum capacity	10.00 W

Connection data

Connection technology

Connection method	N (female)
Outside diameter	25 mm ... 85 mm (Mast)

Ex data

Safety data

Input voltage U_i	30 V
Input current I_i	600 mA
Input power P_i	≤ 1 W (30 dB)
Max. internal inductance L_i	negligible
Capacitance Ci	negligible

Dimensions

Dimensional drawing	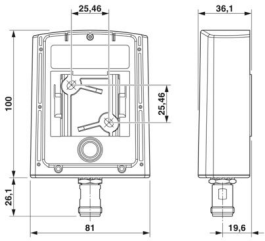
Width	80 mm
Height	100 mm
Length	35 mm

External dimensions

Outside diameter	25 mm ... 85 mm (Mast)

Material specifications

Material	Lexan EXL 9330
	V2A
	V2A

Cable/line

Connecting cable	No
Other resistance	salt water resistant

Environmental and real-life conditions

Ambient conditions

Degree of protection	IP67
Ambient temperature (operation)	-40 °C ... 75 °C
Ambient temperature (storage/transport)	-40 °C ... 85 °C
Wind velocity	220 km/h

Approvals

Electronic devices in rail vehicles

Shock (operation)	In accordance with EN 50125-3, positioning profile: “away from the rails”
Vibration (operation)	In accordance with EN 50125-3, positioning profile: “away from the rails”

Standards and regulations

Other resistance	salt water resistant
Standards/specifications	EN 60079-0
	EN 60079-11
	EN 60079-26
Standards/specifications	EN 50155
Note	Railway application

Standards/specifications	EN 45545-2
	NFPA 130
	BS 6853
Note	Fire protection on railway vehicles

Mounting

Mounting type	Wall mounting
	Mast mounting
Assembly note	Outdoors and indoors

Drawings

Dimensional drawing

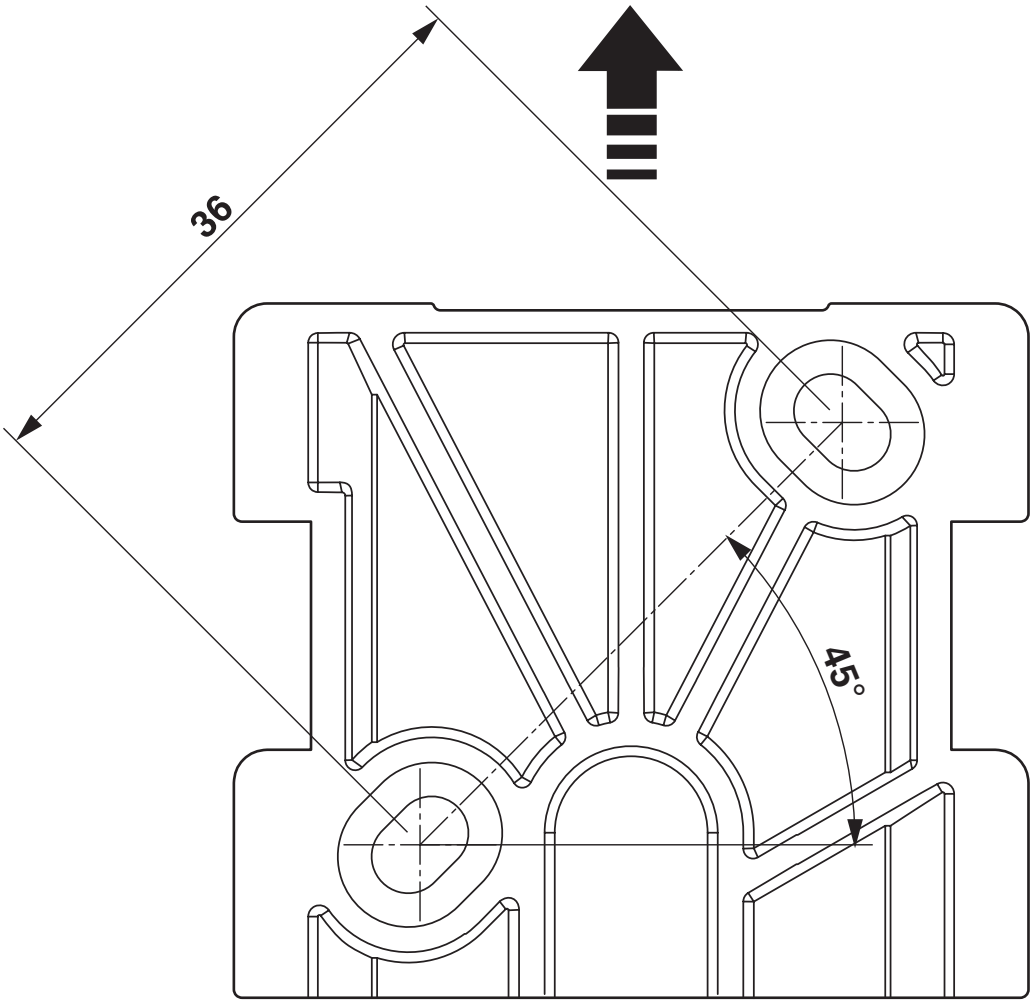

Mounting panel

Schematic diagram

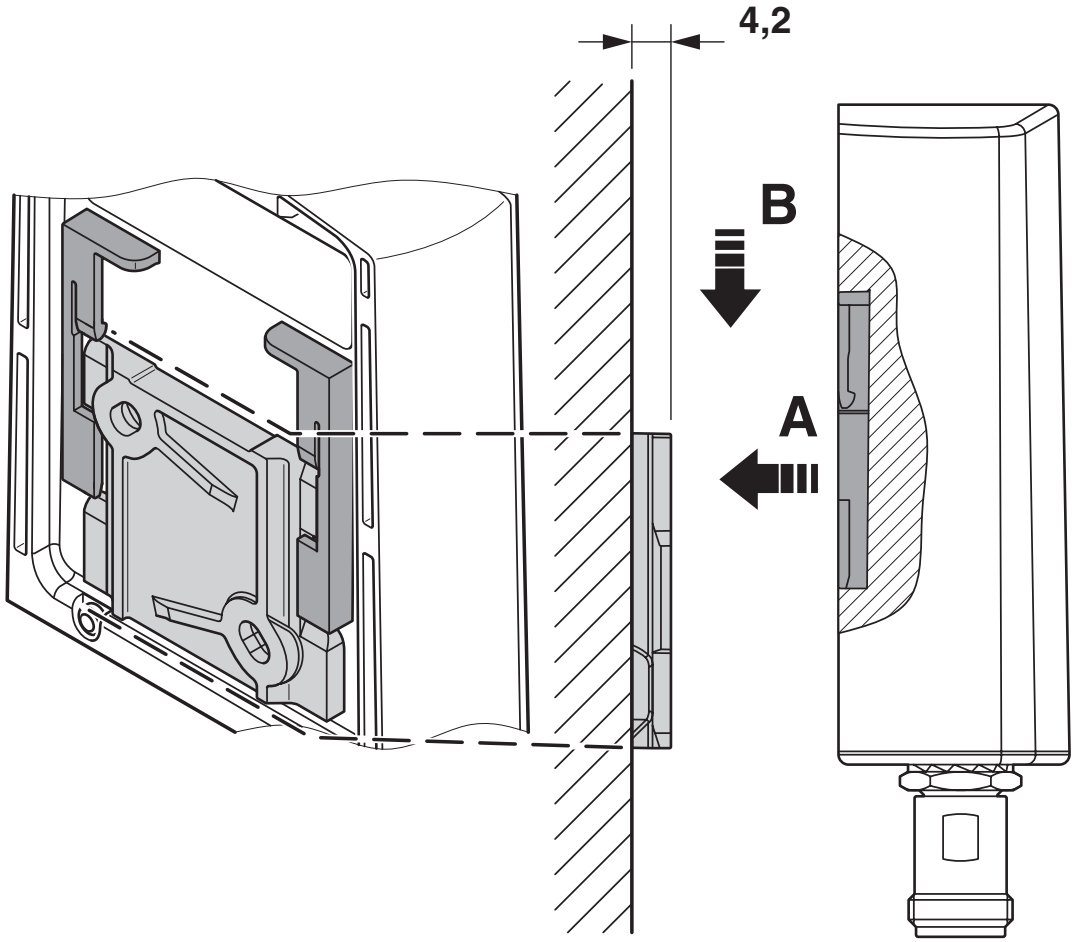

Wall mounting

Schematic diagram

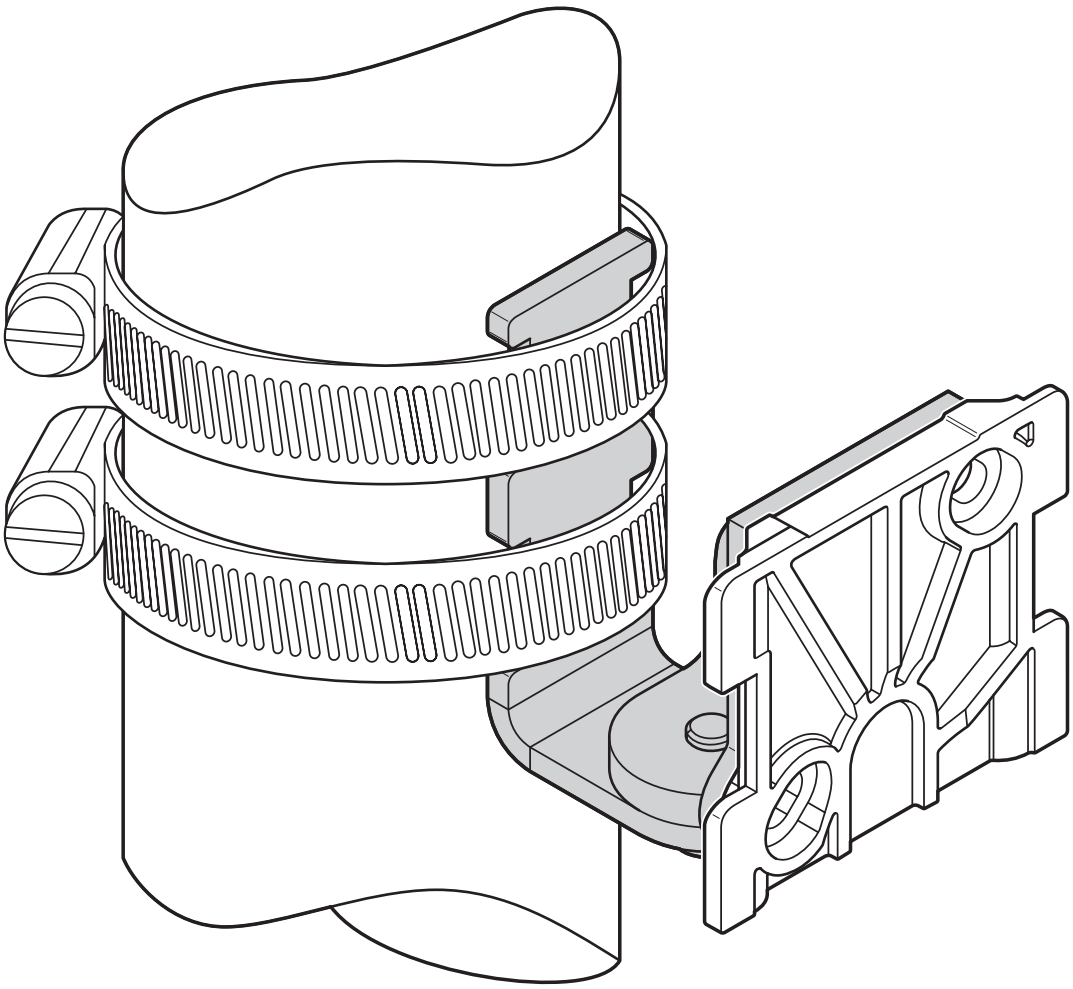

Mast mounting

Dimensional drawing

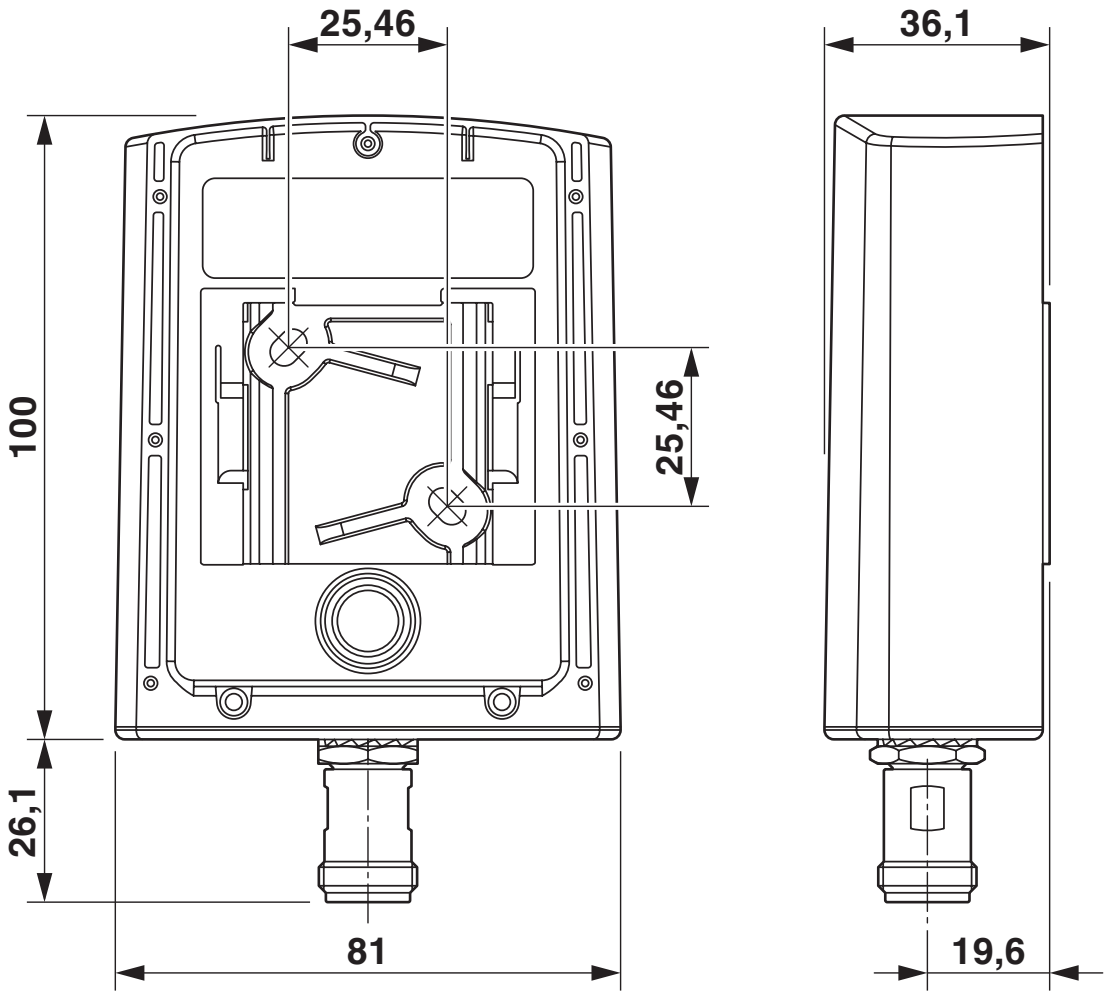

Schematic diagram

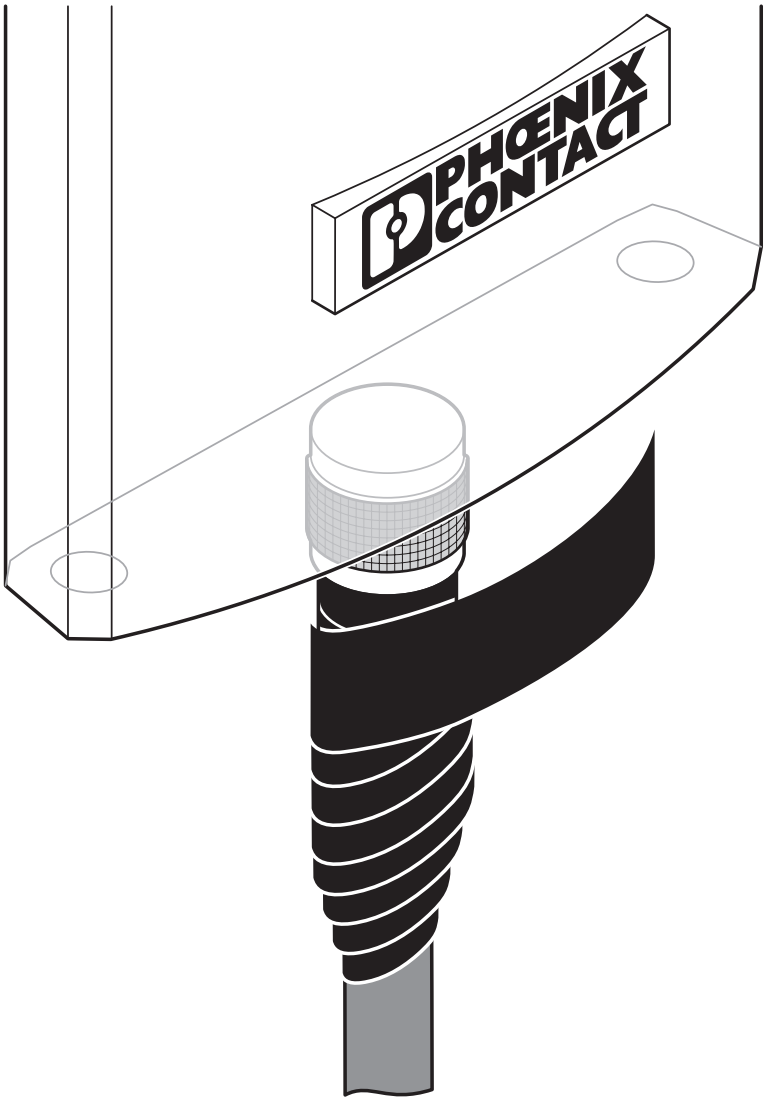

Sealing tape available as an accessory

Schematic diagram

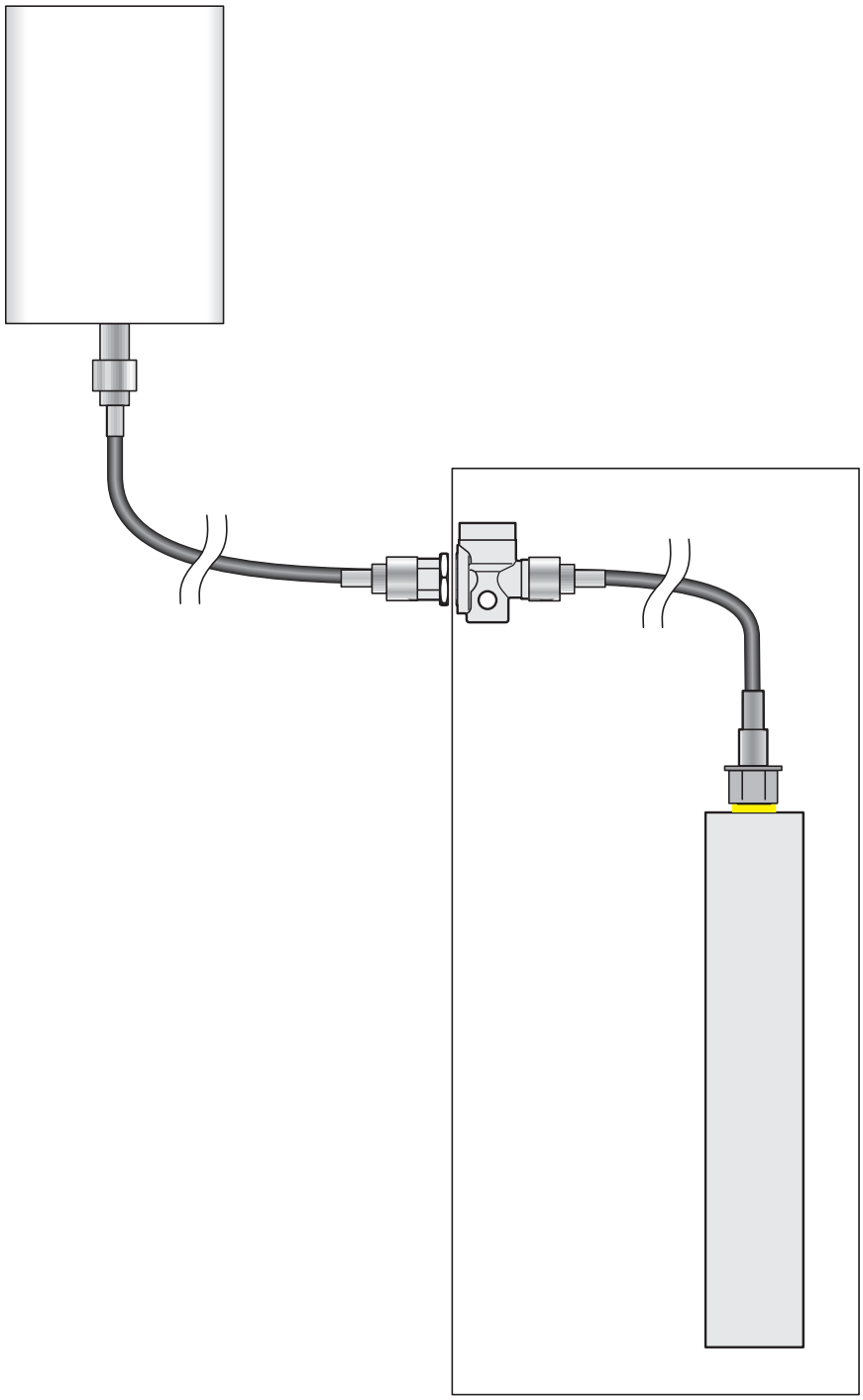

Installation example

Schematic diagram

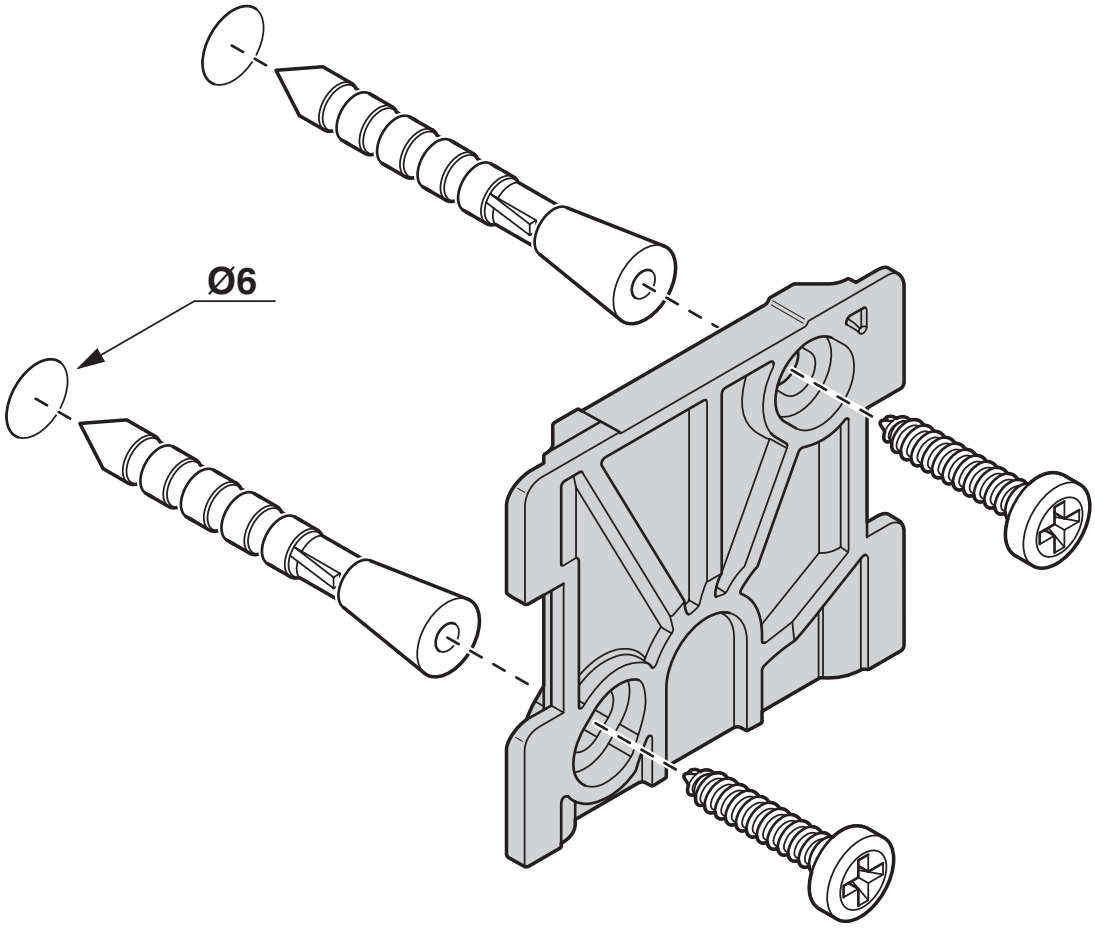

Mounting panel

Approvals

To download certificates, visit the product detail page: https://www.phoenixcontact.com/us/products/2701186

IECEx
Approval ID: IECEx IBE 14.0039X

ATEX
Approval ID: IBExU 14 ATEX 1116 X

Classifications

ECLASS

ECLASS-11.0	19070105
ECLASS-12.0	19070105
ECLASS-13.0	19070105

ETIM

ETIM 9.0	EC001698

UNSPSC

UNSPSC 21.0	43223100

Environmental product compliance

EU RoHS

Fulfills EU RoHS substance requirements	Yes
Exemption	6(c)

China RoHS

Environment friendly use period (EFUP)	EFUP-25
	An article-related China RoHS declaration table can be found in the download area for the respective article under "Manufacturer declaration". For all articles with EFUP-E, no China RoHS declaration table issued and required.

EU REACH SVHC

REACH candidate substance (CAS No.)	Lead(CAS: 7439-92-1)
SCIP	19510ed0-0302-4c1f-9f9b-2f843ca4602f

Phoenix Contact 2024 © - all rights reserved
https://www.phoenixcontact.com

Phoenix Contact USA
586 Fulling Mill Road
Middletown, PA 17057, United States
(+717) 944-1300
info@phoenixcon.com