CUDEVICES

SERIES: CAF-A2B | **DESCRIPTION:** AC AXIAL FAN

FEATURES

- dual ball bearing
- 120 x 120 mm frame
- 110~125 or 220~240 Vac
- multiple speed options



MODEL

	input voltage rated (50/60 Hz) (Vac)	input current[1] max (50/60 Hz) (A)	input power[1] (50/60 Hz) (W±2)	rated speed[1] typ (50/60 Hz) (RPM±10%)	airflow[2] (50/60 Hz) (CFM)	static pressure[3] (50/60 Hz) (inch H_2O)	noise[4] typ (50/60 Hz) (dBA)
CAF-A225B-118-300	110	0.16/0.15	12.7/10.8	1,800[5]/1,700[5]	44.69/45.50	0.08/0.08	32.6/35.2
CAF-A225B-120-350	110	0.19/0.17	14.2/10.8	2,000[6]/2,000[6]	51.94/53.87	0.11/0.10	36.4/37.3
CAF-A225B-218-300	220	0.09/0.08	12.3/9.7	1,800[5]/1,700[5]	44.69/45.50	0.08/0.08	32.4/32.8
CAF-A225B-220-350	220	0.12/0.10	15.7/11.5	2,000[6]/2,000[6]	51.94/53.87	0.11/0.10	36.4/37.3
CAF-A238B-120-300	110	0.17/0.15	7.1/7.1	2,200[5]/1,800[5]	68.20/52.41	0.15/0.08	30.0/29.0
CAF-A238B-124-370	110	0.15/0.14	9.3/8.2	2,400[5]/2,100[5]	72.07/63.52	0.19/0.10	37.7/35.6
CAF-A238B-126-400	110	0.30/0.25	19.8/17.1	2,600/2,900	78.04/84.85	0.26/0.25	39.5/42.6
CAF-A238B-220-300	220	0.08/0.07	7.1/7.1	2,200[5]/1,800[5]	68.20/52.41	0.15/0.08	36.2/29.9
CAF-A238B-224-370	220	0.11/0.10	11.2/9.7	2,400[5]/2,400[5]	71.38/73.30	0.20/0.14	37.7/37.7
CAF-A238B-226-400	220	0.13/0.12	16.0/12.7	2,600/2,900	78.57/88.14	0.26/0.28	41.0/44.3

Notes:
1. At rated voltage, will reach bottom line of specifications after 5 minutes. Will reach standard specification after 10 minutes continuously running.
2. At rated voltage, room temperature, 65% humidity, 0 inch H_2O static pressure.
3. At rated voltage, 0 CFM airflow.
4. Measured in an anechoic chamber as per ISO3745/GB4214-84 at rated voltage, with background noise 10±2 dBA at 1 m from the fan intake.
5. Typical rated speed is measured as RPM±250 at rated voltage.
6. Typical rated speed is measured as RPM±300 at rated voltage.
7. All specifications are measured at 25°C, 65% relative humidity unless otherwise specified.

INPUT

parameter	conditions/description	min	typ	max	units
operating input voltage	110 Vac input models 220 Vac input models	100 220	110	125 240	Vac Vac
starting voltage	CAF-A225B-120-350, CAF-A238B-126-400 models all other 110 Vac input models 220 Vac input models		85 90 175		Vac Vac Vac
locked current	CAF-A225B-118-300 (50/60 Hz) CAF-A225B-120-350 (50/60 Hz) CAF-A225B-218-300 (50/60 Hz) CAF-A225B-220-350 (50/60 Hz) CAF-A238B-120-300 (50/60 Hz) CAF-A238B-124-370 (50/60 Hz) CAF-A238B-126-400 (50/60 Hz) CAF-A238B-220-300 (50/60 Hz) CAF-A238B-224-370 (50/60 Hz) CAF-A238B-226-400 (50/60 Hz)		0.14/0.13 0.17/0.15 0.07/0.07 0.10/0.08 0.17/0.15 0.15/0.14 0.30/0.27 0.06/0.05 0.10/0.08 0.12/0.10		A A A A A A A A A A

PROTECTIONS / FEATURES

parameter	conditions/description	min	typ	max	units
impedance protected motor	on all models				
insulated type	Class B (130 °C)				

SAFETY & COMPLIANCE

parameter	conditions/description	min	typ	max	units
insulation resistance	at 500 Vdc between frame and both lead wires	10			MΩ
dielectric strength	for 1 minute at 1 mA between frame and lead wires		1500		Vac
safety approvals	UL/cUL 507, TUV (EN 60335-1:2012+A11+A13+A1+A14+A2+A15, EN 60335-2-80:2003+A1+A2, EN 62233:200*)				
EMI/EMC	EN 55014-1:2017+A11, EN/IEC 61000-3-2:2019, EN 61000-3-3:2013+A1, EN 55014-2:2015				
life expectancy	at 25°C, 65% RH, 90% confidence level		70,000		hours
RoHS	yes				

ENVIRONMENTAL

parameter	conditions/description	min	typ	max	units
operating temperature		-10		70	°C
storage temperature		-40		80	°C

PERFORMANCE CURVES

CAF-A225B-118-300

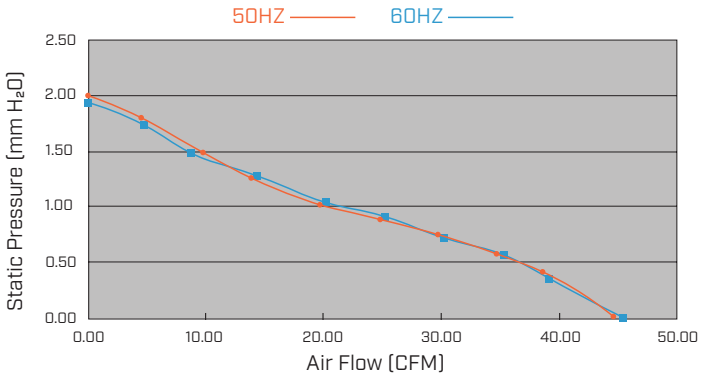

CAF-A225B-120-350

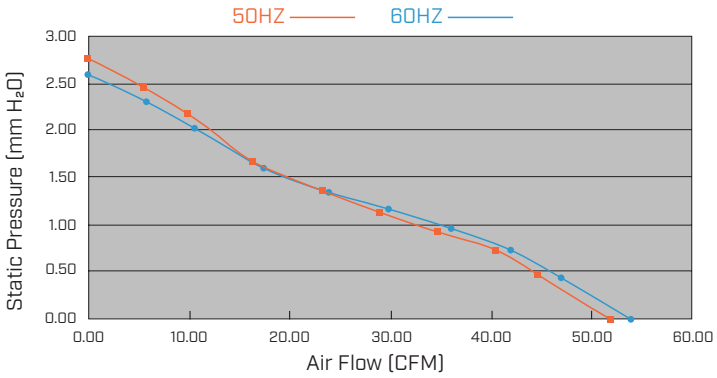

CAF-A225B-218-300

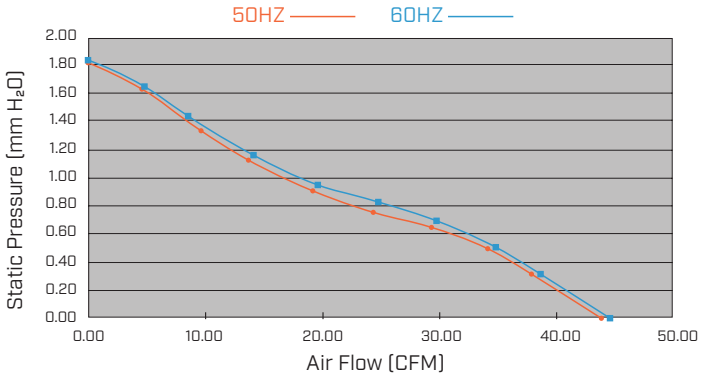

CAF-A225B-220-350

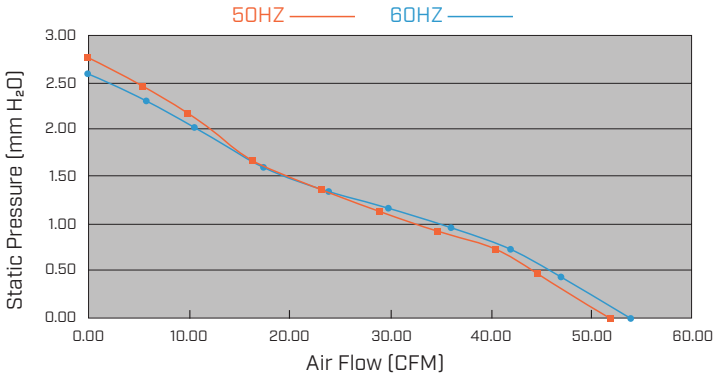

CAF-A238B-120-300

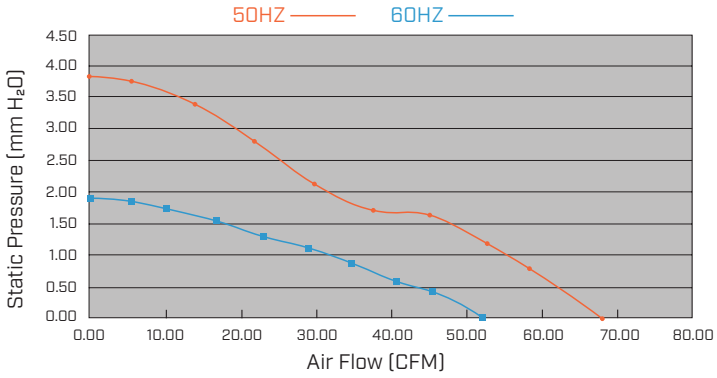

PERFORMANCE CURVES (CONTINUED)

CAF-A238B-124-370

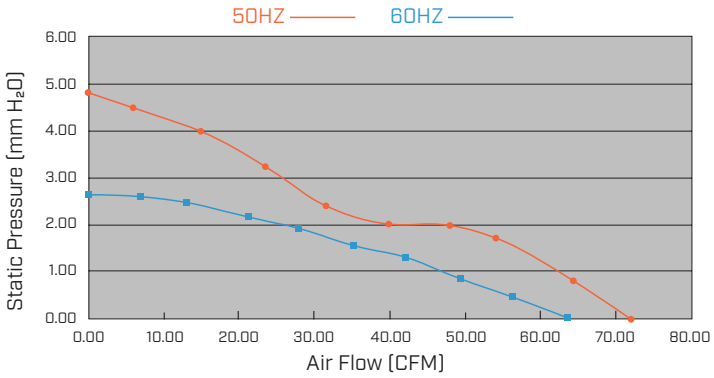

CAF-A238B-126-400

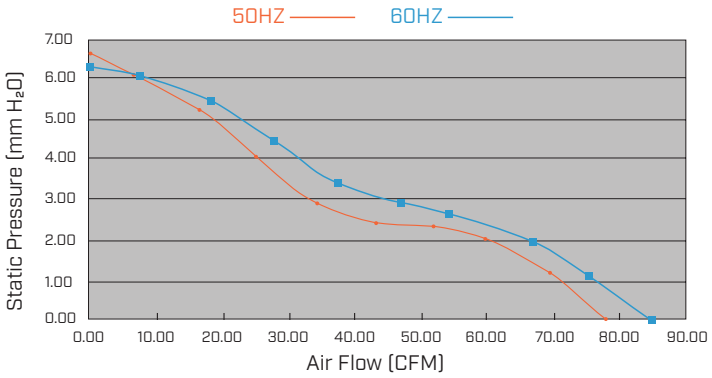

CAF-A238B-220-300

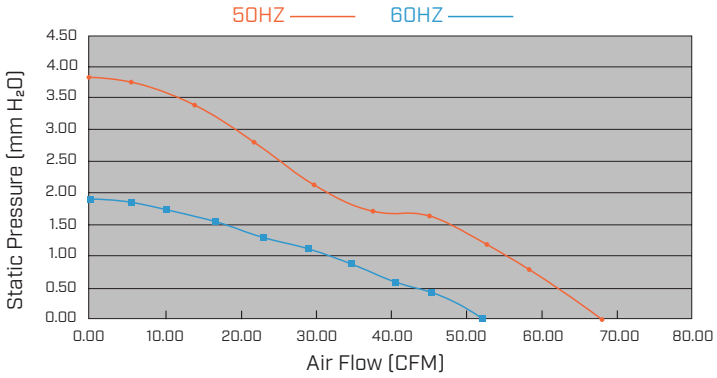

CAF-A238B-224-370

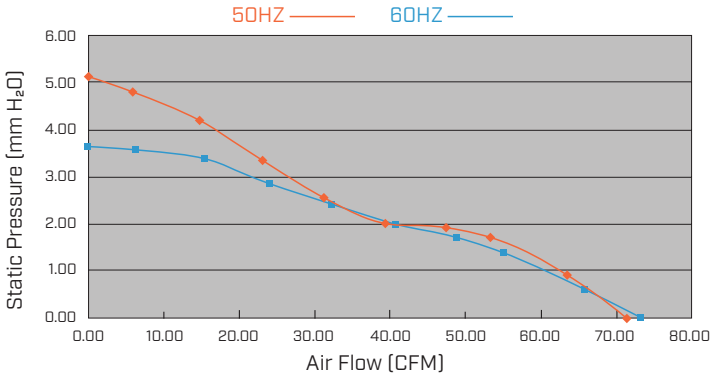

CAF-A238B-226-400

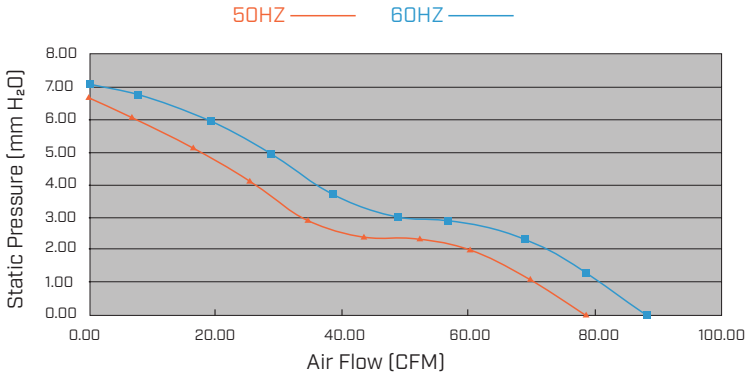

MECHANICAL

parameter	conditions/description	min	typ	max	units
motor	AC brushless				
bearing system	dual ball bearing				
direction of rotation	counter-clockwise viewed from front of fan blade				
dimensions	CAF-A225B models: 119.6 x 119.6 x 26.0 CAF-A238B models: 119.5 x 119.5 x 38.5				mm mm
material	fan frame: aluminum fan impellar: PBT (UL94V-0)				
weight	CAF-A225B models: weight varies by model CAF-A238B models: weight varies by model	285 460		287 475	g g

MECHANICAL DRAWING

units: mm

wires: UL 1007, 22 AWG

MOUNTING SCREW (Pan Head)			
Screw Type	Mounting Hole	Screw Size	Torque
Machine Screw	M4X0.7	M4X0.7	1.5 N-m
Machine Screw	M5X0.8	M5X0.8	2.0 N-m

CAF-A225B

WIRE CONNECTIONS	
Wire Color	Function
Black	+Vin
Black	-Vin

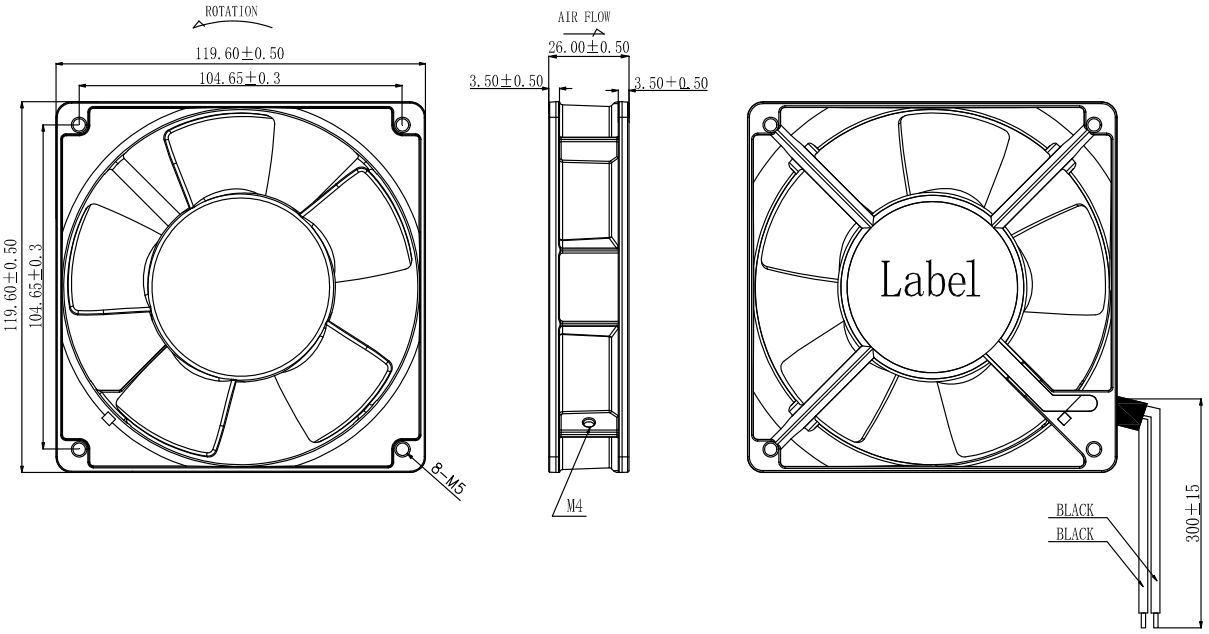

MECHANICAL DRAWING (CONTINUED)

units: mm

wires: UL 1007, 22 AWG

MOUNTING SCREW (Pan Head)			
Screw Type	Mounting Hole	Screw Size	Torque
Machine Screw	M4X0.7	M4X0.7	1.5 N-m
Machine Screw	M5X0.8	M5X0.8	2.0 N-m

CAF-A238B

WIRE CONNECTIONS	
Wire Color	Function
Black	+Vin
Black	-Vin

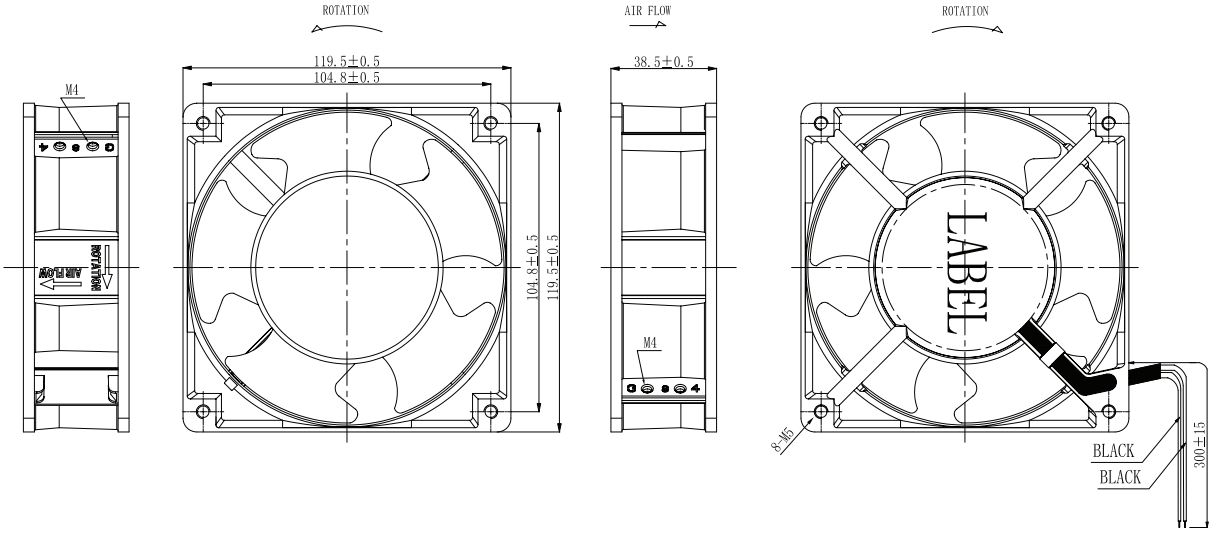

REVISION HISTORY

rev.	description	date
1.0	initial release	10/17/2023
1.01	adjusted frame size of CAF-A225B models	05/06/2024

The revision history provided is for informational purposes only and is believed to be accurate.

CUI Devices offers a one (1) year limited warranty. Complete warranty information is listed on our website.

CUI Devices reserves the right to make changes to the product at any time without notice. Information provided by CUI Devices is believed to be accurate and reliable. However, no responsibility is assumed by CUI Devices for its use, nor for any infringements of patents or other rights of third parties which may result from its use.

CUI Devices products are not authorized or warranted for use as critical components in equipment that requires an extremely high level of reliability. A critical component is any component of a life support device or system whose failure to perform can be reasonably expected to cause the failure of the life support device or system, or to affect its safety or effectiveness.

cuidevices.com