GlobTek, Inc.
www.globtek.com
186 Veterans Drive,
Northvale, NJ 07647
Tel. (201) 784-1000
Fax (201) 784-0111

| | |
|---|---|
| Drawing Title: GTM96060-0606-0.05, ICT / ITE / Medical Power Supply/Class 2/Household Power Supply, Efficiency Level: USA DOE Level VI / Eco-design Directive 2009/125/EC, (EU) 2019/1782, Case Color/Style: GlobTek Black, Wall Plug-in, Regulated Switchmode AC-DC Power Supply AC Adaptor, Input Rating: 100-240V~, 50-60 Hz, Interchangeable Blades, https://www.globtek.com/interchangeable-blades.php, Output Rating: 6.00W, 5.95V@1.0A, Pin Out: Polarity Configuration T00 All plugs are Medical Grade, Locking, Polarized once installed, and single use only. Product demonstration link: https://en.globtek.com/news/t00-changeable-output-plug-system-for-power-supplies MOLDED CONNECTORS AVAILABLE, Output Configuration: 1500 mm, 18/2 Cond, Round Black, T-plug system (includes 5.5x2.5, 5.5x2.1, 3.5x1.3mm plugs in each kit), Ferrite: None, GlobTek Black, GT Cord # C3775, Blades/Input Cord: Q-Series N. American, Approvals: | |
| Model No. GTM96060-0606-0.05 | |
| Part No./Ordering No. WR9QB1000T00NAIMR6B | Rev B |

In Addition to GlobTek Inc.'s renewed ISO9001:2015 - Quality Management System Certification, GlobTek Inc. is now certified to:

ISO13485:2016 - Medical Devices Quality Management System Certification
ISO14001:2015 - Environmental Management System Certification

ISO Certificates are available online at https://www.globtek.com/iso-certificates/

The acceptance of this specification and use of the product described in this document indicates the acceptance and binding of the customer to Globtek TERMS AND CONDITIONS (attached to the end of this document), which supersede all other agreements, terms, and conditions (https://www.globtek.com/terms-and-conditions/).

The purchaser of this product (Customer) agrees that it is their sole responsibility to determine suitability/fitness of the product described in this specification for their application and to take precautions for protection against any hazards attendant to the handling and use of the product.

Footnote:

GlobTek Inc. will not be liable for the safety and performance of these power supplies/battery packs if unauthorized access and repair occurs. End user should consult applicable UL, CSA or EN standards for proper installation instruction.

Limitation of Use:

GlobTek products are intended for use with commercial, medical, and/or industrial equipment only. GlobTek product are not authorized for use as mission critical components in life support hazardous environment, nuclear or aircraft applications without prior written approval from the CEO of GlobTek Inc.
Contents of this document are subject to change without prior notice.

## Customer Approval of Specification:

Please approve, sign and send back to GlobTek so we can complete order processing.
A delay in receipt of this form will delay delivery schedule.

| | |
|---|---|
| Company Name: | Customer P/N: |
| Quote Number: | Date: |
| Authorized Representative Name: | Authorized Representative Signature: |

PROPRIETARY INFORMATION
PROPRIETARY OF GLOBTEK, INC. ANY REPRODUCTION, DISCLOSURE OR USE OF THIS DRAWING, IN WHOLE OR IN PART, IS HEREBY PROHIBITED EXCEPT AS SPECIFIED IN WRITING BY GLOBTEK, INC. © GlobTek, Inc. 2017 - 2024
guest / 05/27/2024 2:35:02 PM GMT

GlobTek, Inc.
www.globtek.com
186 Veterans Drive,
Northvale, NJ 07647
Tel. (201) 784-1000
Fax (201) 784-0111

Drawing Title: GTM96060-0606-0.05, ICT / ITE / Medical Power Supply/Class 2/Household Power Supply, Efficiency Level: USA DOE Level VI / Eco-design Directive 2009/125/EC, (EU) 2019/1782, Case Color/Style: GlobTek Black, Wall Plug-in, Regulated Switchmode AC-DC Power Supply AC Adaptor, Input Rating: 100-240V~, 50-60 Hz, Interchangeable Blades, https://www.globtek.com/interchangeable-blades.php, Output Rating: 6.00W, 5.95V@1.0A, Pin Out: Polarity Configuration T00 All plugs are Medical Grade, Locking, Polarized once installed, and single use only. Product demonstration link: https://en.globtek.com/news/t00-changeable-output-plug-system-for-power-supplies MOLDED CONNECTORS AVAILABLE, Output Configuration: 1500 mm, 18/2 Cond, Round Black, T-plug system (includes 5.5x2.5, 5.5x2.1, 3.5x1.3mm plugs in each kit), Ferrite: None, GlobTek Black, GT Cord # C3775, Blades/Input Cord: Q-Series N. American, Approvals:

Model No. GTM96060-0606-0.05

Part No./Ordering No. WR9QB1000T00NAIMR6B | Rev B

# REVISION HISTORY

| REV | DESCRIPTION | SUB | DATE | APPROVED |
|---|---|---|---|---|
| B | Change packing from Egg crate to Gift box dimensions 100*90*58 mm | QA | 04/18/2019 | QA |
| A2 | Update output current from 1.01A to 1A | rchiu | 10/03/2017 | QA |
| A1 | Update voltage from 6V to 5.95V | rchiu | 05/26/2017 | QA |
| A | Initial Release | jwarn | 05/02/2017 | QA |

## POWER SUPPLY INFORMATION

| | |
|---|---|
| TYPE | Wall Plug-in |
| TECHNOLOGY | Regulated Switchmode AC-DC Power Supply AC Adaptor |
| CASE COLOR | GlobTek Black |
| NAMEPLATE RATED INPUT | 100-240V~, 50-60 Hz, 0.6 A |
| INPUT CONFIG | Interchangeable Blades |
| WATTS | 6.00 |
| VOLTS OUT | 5.95 |
| CURRENT OUT (Amps) | 1.0 |
| BLADE/CORD INCLUDED | Q-NA(R) Q-Series N. American |
| BLADE/CORD INSTALLED | Q-NA(R) :Q-Series N. American |
| INGRESS PROTECTION | IP42 (Optional IP54-IP55) |
| GROUNDING CONFIGURATION | (F1) Floating output, Class II / double insulated |
| EFFICIENCY LEVEL | USA DOE Level VI / Eco-design Directive 2009/125/EC, (EU) 2019/1782 - Europe Code of Conduct on Energy Efficiency of External Power Supplies - Version 5 |
| OUTPUT CONFIGURATION | 1500 mm, 18/2 Cond, Round Black, T-plug system (includes 5.5x2.5, 5.5x2.1, 3.5x1.3mm plugs in each kit), Ferrite: None, GlobTek Black, GT Cord # C3775 |
| OVERMOLDED | Yes |
| OUTPUT CONNECTOR GENDER | not applicable |
| CONNECTOR PIN OUT | Polarity Configuration T00 All plugs are Medical Grade, Locking, Polarized once installed, and single use only. Product demonstration link: https://en.globtek.com/news/t00-changeable-output-plug-system-for-power-supplies MOLDED CONNECTORS AVAILABLE |
| LABEL SPECS | Standard GT,L-1186 |
| SPECIAL BARCODE LABEL MATERIAL | No |
| PACK SPEC | Packing for Wall plug model with T00 plug and manual |
| USER MANUAL | 809-PSUQKITUSERMANUAL on A4 paper |

PROPRIETARY INFORMATION
PROPRIETARY OF GLOBTEK, INC. ANY REPRODUCTION, DISCLOSURE OR USE OF THIS DRAWING, IN WHOLE OR IN PART, IS HEREBY PROHIBITED EXCEPT AS SPECIFIED IN WRITING BY GLOBTEK, INC. © GlobTek, Inc. 2017 - 2024
guest / 05/27/2024 2:35:02 PM GMT

GlobTek, Inc.
www.globtek.com
186 Veterans Drive,
Northvale, NJ 07647
Tel. (201) 784-1000
Fax (201) 784-0111

| | |
|---|---|
| Drawing Title: GTM96060-0606-0.05, ICT / ITE / Medical Power Supply/Class 2/Household Power Supply, Efficiency Level: USA DOE Level VI / Eco-design Directive 2009/125/EC, (EU) 2019/1782, Case Color/Style: GlobTek Black, Wall Plug-in, Regulated Switchmode AC-DC Power Supply AC Adaptor, Input Rating: 100-240V~, 50-60 Hz, Interchangeable Blades, https://www.globtek.com/interchangeable-blades.php, Output Rating: 6.00W, 5.95V@1.0A, Pin Out: Polarity Configuration T00 All plugs are Medical Grade, Locking, Polarized once installed, and single use only. Product demonstration link: https://en.globtek.com/news/t00-changeable-output-plug-system-for-power-supplies MOLDED CONNECTORS AVAILABLE, Output Configuration: 1500 mm, 18/2 Cond, Round Black, T-plug system (includes 5.5x2.5, 5.5x2.1, 3.5x1.3mm plugs in each kit), Ferrite: None, GlobTek Black, GT Cord # C3775, Blades/Input Cord: Q-Series N. American, Approvals: | |
| Model No. GTM96060-0606-0.05 | |
| Part No./Ordering No. WR9QB1000T00NAIMR6B | Rev B |

Notes/Modifications/Customizations (notes in this section supersede the values shown in the standard spec)

DIMENSIONS ARE IN MM UNLESS SPECIFIED OTHERWISE

PROPRIETARY INFORMATION

PROPRIETARY OF GLOBTEK, INC. ANY REPRODUCTION, DISCLOSURE OR USE OF THIS DRAWING, IN WHOLE OR IN PART, IS HEREBY PROHIBITED EXCEPT AS SPECIFIED IN WRITING BY GLOBTEK, INC. © GlobTek, Inc. 2017 - 2024

guest / 05/27/2024 2:35:02 PM GMT

GlobTek, Inc.
www.globtek.com
186 Veterans Drive,
Northvale, NJ 07647
Tel. (201) 784-1000
Fax (201) 784-0111

Drawing Title: GTM96060-0606-0.05, ICT / ITE / Medical Power Supply/Class 2/Household Power Supply, Efficiency Level: USA DOE Level VI / Eco-design Directive 2009/125/EC, (EU) 2019/1782, Case Color/Style: GlobTek Black, Wall Plug-in, Regulated Switchmode AC-DC Power Supply AC Adaptor, Input Rating: 100-240V~, 50-60 Hz, Interchangeable Blades, https://www.globtek.com/interchangeable-blades.php, Output Rating: 6.00W, 5.95V@1.0A, Pin Out: Polarity Configuration T00 All plugs are Medical Grade, Locking, Polarized once installed, and single use only. Product demonstration link: https://en.globtek.com/news/t00-changeable-output-plug-system-for-power-supplies MOLDED CONNECTORS AVAILABLE, Output Configuration: 1500 mm, 18/2 Cond, Round Black, T-plug system (includes 5.5x2.5, 5.5x2.1, 3.5x1.3mm plugs in each kit), Ferrite: None, GlobTek Black, GT Cord # C3775, Blades/Input Cord: Q-Series N. American, Approvals:

Model No. GTM96060-0606-0.05

Part No./Ordering No. WR9QB1000T00NAIMR6B Rev B

ELECTRICAL SPECIFICATIONS

## Input

| | |
|---|---|
| Input Voltage: | Specified: 90-264VAC, Nameplate: 100-240VAC<br>100% rated load current for 90-264VAC<br>85% rated load current for 85-264VAC<br>100% rated load current for 110-370VDC |
| Input Frequency: | Specified: 47-63Hz, Nameplate: 50-60Hz |
| No Load Input Power: | <75mW @ 230VAC |
| Inrush Current: | <30A @ 230VAC (cold start @ 25°C) |
| Efficiency: | DoE Energy Level VI and CoC Tier 2, for models 5V and above |

## Output

| | |
|---|---|
| Turn-on Delay: | 1 second max. @ 100VAC and full load |
| Output Regulation | ± 5% (measured at the output connector) |
| Line Regulation: | ± 1% (measured at the output connector @ full load) |
| Ripple: | 0.5% pk-pk or 50mV, whichever is greater (using a 47µF low-ESR cap + 0.1µF ceramic capacitor, measured @ 20MHz BW)<br>(Note: < 0.2% or 25mV option available upon request) |
| Transient Response: | 5% deviation max. (with 25% load step), recovery to within 1ms typ. |
| Startup Overshoot: | <5% (full load) |
| Hold-up Time: | 8ms min. (100VAC and full load) |
| Power Indicator: | Green LED |
| Switching Frequency: | 65KHz typ. |

## Protections

| | |
|---|---|
| Input Protection: | 300Vac MOV transient suppressor, input line fusing |
| Over-Voltage Protection: | 110-130%, of nominal output voltage |
| Current Limiting:<br>(Standard CV Models): | Short circuit and overload protected, auto recovery<br>Output current limit: 120% to 250% of rated output current<br>(Upper end of current limit range is determined by normal output power rating, not derated output power level) |
| Current Limiting:<br>(Constant Current Models): | ± 10% of specified nominal output current rating<br>Current regulated from Vout (nom.) to 0.25 * Vout (nom.)<br>Average output current below 0.25 * Vout will be reduced, and unit will hiccup cycle |
| Over-Temperature Protection | On-chip temperature sensor (integrated in primary-side switching controller), shut down at Tj = ~140°C, restart at Tj = ~70°C |

PROPRIETARY INFORMATION
PROPRIETARY OF GLOBTEK, INC. ANY REPRODUCTION, DISCLOSURE OR USE OF THIS DRAWING, IN WHOLE OR IN PART, IS HEREBY PROHIBITED EXCEPT AS SPECIFIED IN WRITING BY GLOBTEK, INC. © GlobTek, Inc. 2017 - 2024
guest / 05/27/2024 2:35:02 PM GMT

## Environmental

| | |
|---|---|
| MTBF: | 1,500,000 hours @ 25°C ambient, full load (Telcordia SR-332, Issue 3) |
| Operating Temperature: | -10°C to 50°C (@ 6W load)<br>See derating graph for output power capability outside of standard range. |
| Storage Temperature: | -30°C to 80°C |
| Humidity: | 0% to 95% relative humidity, non-condensing |
| Cooling: | Convection |
| RoHS: | Compliant with latest regulations |

## Safety

| | |
|---|---|
| Dielectric Withstand Voltage: | 4000VAC or 5656VDC from input to output |
| Touch Current: | <60µA |
| Earth Leakage Current | N/A, Class II input (No protective earth pin, therefore earth leakage is not measured) |
| Means of Protection: | 2 x MOPP |
| Primary-Secondary Bridging Capacitance: | Two 470pF IEC60384-14 certified Y1 capacitors in series |

## EMC

| | |
|---|---|
| Applicable Standards: | Medical: EN60601-1-2, 4th edition<br>Emissions: EN55032, EN 55011, EN61000-6-3, EN61000-6-4, CISPR11, CISPR22<br>Immunity: EN55024, EN61000-6-1, EN61000-6-2 |
| Conducted Emissions: | Class B, FCC Part 15, Class B (with resistive load) |
| Radiated Emissions: | Class B, FCC Part 15, Class B (with resistive load) |
| Harmonic Current Voltage Distortion: | EN61000-3-2, Class A |
| Voltage Fluctuations/Flicker: | EN61000-3-3 |
| Electrostatic Discharge (ESD) Immunity: | EN61000-4-2, 10KV contact discharge, 18KV air discharge |
| Radiated RF Immunity: | EN61000-4-3, 10V/m 80-1000MHz, 3V/m 1-2.7GHz, 80% 1KHz AM |
| EFT/Burst Immunity: | EN61000-4-4, 4KV/100kHz. |
| Line Surge Immunity: | EN61000-4-5, 1.5KV differential, 4KV common-mode |
| Conducted RF Immunity: | EN61000-4-6, 3VRMS, 80% 1KHz AM |
| Power Frequency Magnetic Field Immunity: | EN61000-4-8, 3A/m |
| Voltage Dip Immunity: | EN61000-4-11 |

## Enclosure

| | |
|---|---|
| Housing: | High impact plastic, 94V0 polycarbonate, non-vented |
| Size: | 43.5 x 74.0 x 36.8 +/-1.0 mm |
| Markings: | Label, pad printing, or laser engraving |


PROPRIETARY INFORMATION
PROPRIETARY OF GLOBTEK, INC. ANY REPRODUCTION, DISCLOSURE OR USE OF THIS DRAWING, IN WHOLE OR IN PART, IS HEREBY PROHIBITED EXCEPT AS SPECIFIED IN WRITING BY GLOBTEK, INC. © GlobTek, Inc. 2017 - 2024
guest / 05/27/2024 2:35:02 PM GMT

GlobTek, Inc.
www.globtek.com
186 Veterans Drive,
Northvale, NJ 07647
Tel. (201) 784-1000
Fax (201) 784-0111

| | |
|---|---|
| Drawing Title: GTM96060-0606-0.05, ICT / ITE / Medical Power Supply/Class 2/Household Power Supply, Efficiency Level: USA DOE Level VI / Eco-design Directive 2009/125/EC, (EU) 2019/1782, Case Color/Style: GlobTek Black, Wall Plug-in, Regulated Switchmode AC-DC Power Supply AC Adaptor, Input Rating: 100-240V~, 50-60 Hz, Interchangeable Blades, https://www.globtek.com/interchangeable-blades.php, Output Rating: 6.00W, 5.95V@1.0A, Pin Out: Polarity Configuration T00 All plugs are Medical Grade, Locking, Polarized once installed, and single use only. Product demonstration link: https://en.globtek.com/news/t00-changeable-output-plug-system-for-power-supplies MOLDED CONNECTORS AVAILABLE, Output Configuration: 1500 mm, 18/2 Cond, Round Black, T-plug system (includes 5.5x2.5, 5.5x2.1, 3.5x1.3mm plugs in each kit), Ferrite: None, GlobTek Black, GT Cord # C3775, Blades/Input Cord: Q-Series N. American, Approvals: | |
| Model No. GTM96060-0606-0.05 | |
| Part No./Ordering No. WR9QB1000T00NAIMR6B | Rev B |

## Special Options

1. Cost reduction, removal of LED
2. Custom cordsets, various cordage types, and connector types
3. Custom markings
4. Reduced leakage current version, medical Type-CF leakage current compliance
5. Tightened output voltage tolerance
6. Reduced output ripple level
7. Constant current battery charger characteristic
8. Reduced output power rating
9. High reliability PCB laminate with plated through-holes for IPC610 Class 2 Compliance
10. Output voltage between 3.3V and 4.9V (without DoE EL6 and EU CoC Tier 2 compliance)
11. Special housing colors and cordset colors
12. Tamper proof, AC wall plug-in blade assembly. (Requires a special tool to remove the AC Wall Plug-in blade assembly.)

TO ADDRESS SYSTEM-LEVEL EMI CONCERNS, FERRITE CHOKES/BEADS MAY BE ADDED/REVISED UPON REQUEST. A SAMPLE KIT OF GLOBTEK'S STANDARD FERRITES IS AVAILABLE UNDER GLOBTEK P/N: EMI-MITIGATION-KIT1

FOR ADDITIONAL INFORMATION, PLEASE READ OUR WHITE PAPER AT: https://r.globtek.info/3QeaqtD

INGRESS PROTECTION: IP42 (Optional IP54-IP55)

PROPRIETARY INFORMATION
PROPRIETARY OF GLOBTEK, INC. ANY REPRODUCTION, DISCLOSURE OR USE OF THIS DRAWING, IN WHOLE OR IN PART, IS HEREBY PROHIBITED EXCEPT AS SPECIFIED IN WRITING BY GLOBTEK, INC. © GlobTek, Inc. 2017 - 2024
guest / 05/27/2024 2:35:02 PM GMT

GlobTek, Inc.
www.globtek.com
186 Veterans Drive,
Northvale, NJ 07647
Tel. (201) 784-1000
Fax (201) 784-0111

| | |
|---|---|
| Drawing Title: GTM96060-0606-0.05, ICT / ITE / Medical Power Supply/Class 2/Household Power Supply, Efficiency Level: USA DOE Level VI / Eco-design Directive 2009/125/EC, (EU) 2019/1782, Case Color/Style: GlobTek Black, Wall Plug-in, Regulated Switchmode AC-DC Power Supply AC Adaptor, Input Rating: 100-240V~, 50-60 Hz, Interchangeable Blades, https://www.globtek.com/interchangeable-blades.php, Output Rating: 6.00W, 5.95V@1.0A, Pin Out: Polarity Configuration T00 All plugs are Medical Grade, Locking, Polarized once installed, and single use only. Product demonstration link: https://en.globtek.com/news/t00-changeable-output-plug-system-for-power-supplies MOLDED CONNECTORS AVAILABLE, Output Configuration: 1500 mm, 18/2 Cond, Round Black, T-plug system (includes 5.5x2.5, 5.5x2.1, 3.5x1.3mm plugs in each kit), Ferrite: None, GlobTek Black, GT Cord # C3775, Blades/Input Cord: Q-Series N. American, Approvals: | |
| Model No. GTM96060-0606-0.05 | |
| Part No./Ordering No. WR9QB1000T00NAIMR6B | Rev B |

3D File Download https://www.globtek.com/dl/GTM96180-WALL-PLUG%20(5).igs

Mechanical drawing

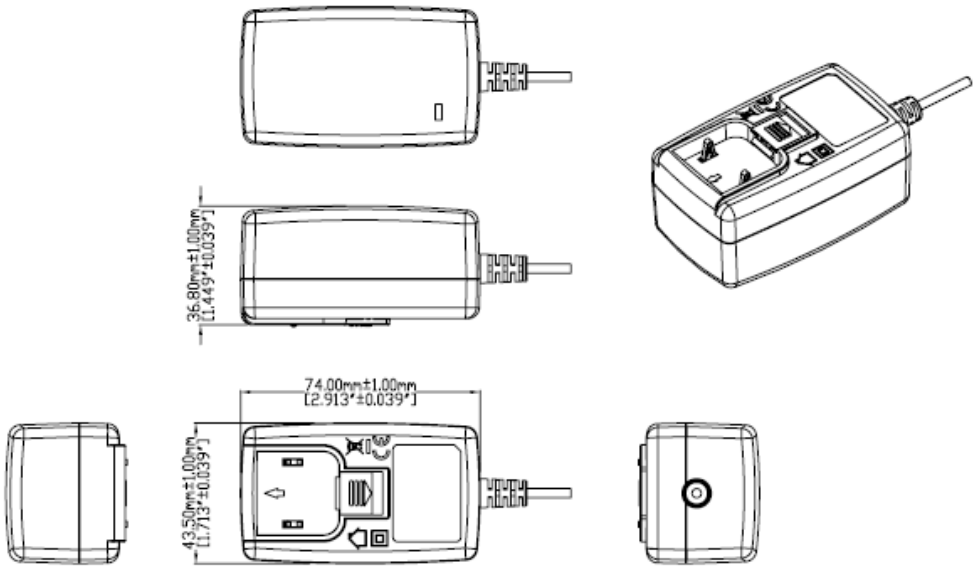


LED INDICATOR: Green Power ON indicator LED standard. May be ordered without LED as an option

PROPRIETARY INFORMATION
PROPRIETARY OF GLOBTEK, INC. ANY REPRODUCTION, DISCLOSURE OR USE OF THIS DRAWING, IN WHOLE OR IN PART, IS HEREBY PROHIBITED EXCEPT AS SPECIFIED IN WRITING BY GLOBTEK, INC. © GlobTek, Inc. 2017 - 2024
guest / 05/27/2024 2:35:02 PM GMT

GlobTek, Inc.
www.globtek.com
186 Veterans Drive,
Northvale, NJ 07647
Tel. (201) 784-1000
Fax (201) 784-0111

Drawing Title: GTM96060-0606-0.05, ICT / ITE / Medical Power Supply/Class 2/Household Power Supply, Efficiency Level: USA DOE Level VI / Eco-design Directive 2009/125/EC, (EU) 2019/1782, Case Color/Style: GlobTek Black, Wall Plug-in, Regulated Switchmode AC-DC Power Supply AC Adaptor, Input Rating: 100-240V~, 50-60 Hz, Interchangeable Blades, https://www.globtek.com/interchangeable-blades.php, Output Rating: 6.00W, 5.95V@1.0A, Pin Out: Polarity Configuration T00 All plugs are Medical Grade, Locking, Polarized once installed, and single use only. Product demonstration link: https://en.globtek.com/news/t00-changeable-output-plug-system-for-power-supplies MOLDED CONNECTORS AVAILABLE, Output Configuration: 1500 mm, 18/2 Cond, Round Black, T-plug system (includes 5.5x2.5, 5.5x2.1, 3.5x1.3mm plugs in each kit), Ferrite: None, GlobTek Black, GT Cord # C3775, Blades/Input Cord: Q-Series N. American, Approvals:

Model No. GTM96060-0606-0.05

Part No./Ordering No. WR9QB1000T00NAIMR6B | Rev B

## DERATING CURVE

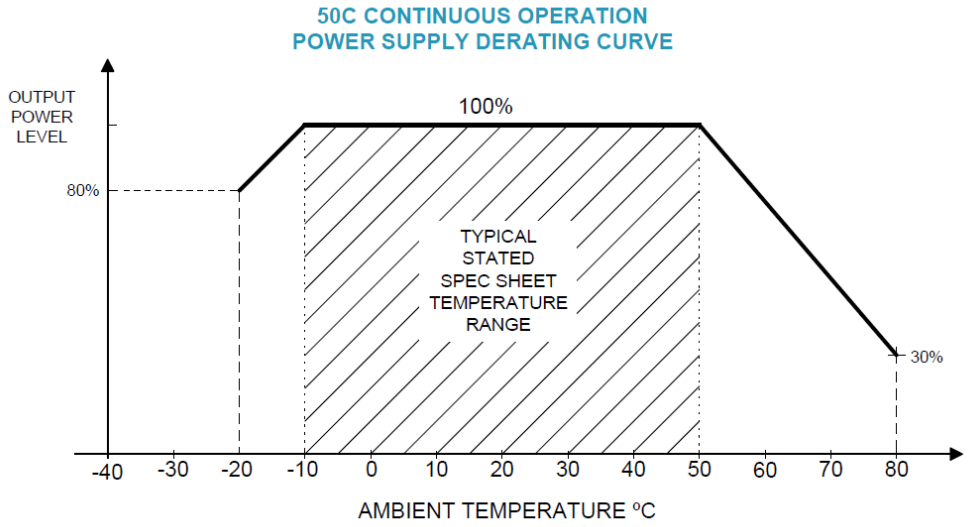


PROPRIETARY INFORMATION
PROPRIETARY OF GLOBTEK, INC. ANY REPRODUCTION, DISCLOSURE OR USE OF THIS DRAWING, IN WHOLE OR IN PART, IS HEREBY PROHIBITED EXCEPT AS SPECIFIED IN WRITING BY GLOBTEK, INC. © GlobTek, Inc. 2017 - 2024
guest / 05/27/2024 2:35:02 PM GMT

GlobTek, Inc.
www.globtek.com
186 Veterans Drive,
Northvale, NJ 07647
Tel. (201) 784-1000
Fax (201) 784-0111

Drawing Title: GTM96060-0606-0.05, ICT / ITE / Medical Power Supply/Class 2/Household Power Supply, Efficiency Level: USA DOE Level VI / Eco-design Directive 2009/125/EC, (EU) 2019/1782, Case Color/Style: GlobTek Black, Wall Plug-in, Regulated Switchmode AC-DC Power Supply AC Adaptor, Input Rating: 100-240V~, 50-60 Hz, Interchangeable Blades, https://www.globtek.com/interchangeable-blades.php, Output Rating: 6.00W, 5.95V@1.0A, Pin Out: Polarity Configuration T00 All plugs are Medical Grade, Locking, Polarized once installed, and single use only. Product demonstration link: https://en.globtek.com/news/t00-changeable-output-plug-system-for-power-supplies MOLDED CONNECTORS AVAILABLE, Output Configuration: 1500 mm, 18/2 Cond, Round Black, T-plug system (includes 5.5x2.5, 5.5x2.1, 3.5x1.3mm plugs in each kit), Ferrite: None, GlobTek Black, GT Cord # C3775, Blades/Input Cord: Q-Series N. American, Approvals:

Model No. GTM96060-0606-0.05

Part No./Ordering No. WR9QB1000T00NAIMR6B | Rev B

## INPUT CONFIGURATION

(F1) Floating output, Class II / double insulated

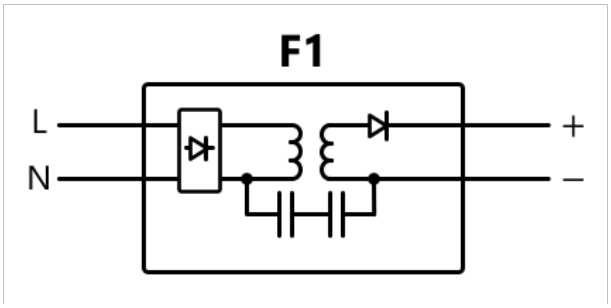


Alternate grounding configurations available upon request.

Blades/Cord Included:Q-NA(R):Q-Series N. American

Blades/Cord Installed:Q-NA(R):Q-Series N. American

Q Blades (Interchangeable)
Blade Options for Q Series Wall Plug-in Power Supplies

PROPRIETARY INFORMATION
PROPRIETARY OF GLOBTEK, INC. ANY REPRODUCTION, DISCLOSURE OR USE OF THIS DRAWING, IN WHOLE OR IN PART, IS HEREBY PROHIBITED EXCEPT AS SPECIFIED IN WRITING BY GLOBTEK, INC. © GlobTek, Inc. 2017 - 2024
guest / 05/27/2024 2:35:02 PM GMT

GlobTek, Inc.
www.globtek.com
186 Veterans Drive,
Northvale, NJ 07647
Tel. (201) 784-1000
Fax (201) 784-0111

| | |
|---|---|
| Drawing Title: GTM96060-0606-0.05, ICT / ITE / Medical Power Supply/Class 2/Household Power Supply, Efficiency Level: USA DOE Level VI / Eco-design Directive 2009/125/EC, (EU) 2019/1782, Case Color/Style: GlobTek Black, Wall Plug-in, Regulated Switchmode AC-DC Power Supply AC Adaptor, Input Rating: 100-240V~, 50-60 Hz, Interchangeable Blades, https://www.globtek.com/interchangeable-blades.php, Output Rating: 6.00W, 5.95V@1.0A, Pin Out: Polarity Configuration T00 All plugs are Medical Grade, Locking, Polarized once installed, and single use only. Product demonstration link: https://en.globtek.com/news/t00-changeable-output-plug-system-for-power-supplies MOLDED CONNECTORS AVAILABLE, Output Configuration: 1500 mm, 18/2 Cond, Round Black, T-plug system (includes 5.5x2.5, 5.5x2.1, 3.5x1.3mm plugs in each kit), Ferrite: None, GlobTek Black, GT Cord # C3775, Blades/Input Cord: Q-Series N. American, Approvals: | |
| Model No. GTM96060-0606-0.05 | |
| Part No./Ordering No. WR9QB1000T00NAIMR6B | Rev B |

Data Sheet: http://en.globtek.com/interchangeable-blades.php

Insertion Instructions: http://www.globtek.com/pdf/Instructions-Interchangeable-Blades.pdf

Video: Q-Blade Style Instruction Video

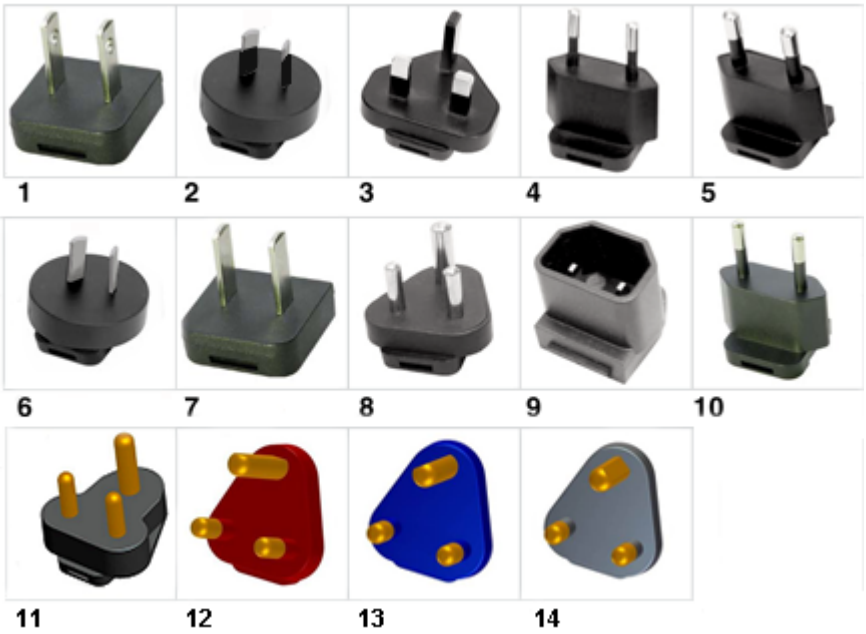


INPUT CONNECTOR: Q-Socket (below are available blades configurations which are "not included" (unless stated above); can be purchased separately, package with power supply or as a separate "Q-KIT" if specified

PROPRIETARY INFORMATION
PROPRIETARY OF GLOBTEK, INC. ANY REPRODUCTION, DISCLOSURE OR USE OF THIS DRAWING, IN WHOLE OR IN PART, IS HEREBY PROHIBITED EXCEPT AS SPECIFIED IN WRITING BY GLOBTEK, INC. © GlobTek, Inc. 2017 - 2024
guest / 05/27/2024 2:35:02 PM GMT

GlobTek, Inc.
www.globtek.com
186 Veterans Drive,
Northvale, NJ 07647
Tel. (201) 784-1000
Fax (201) 784-0111

| | |
|---|---|
| Drawing Title: GTM96060-0606-0.05, ICT / ITE / Medical Power Supply/Class 2/Household Power Supply, Efficiency Level: USA DOE Level VI / Eco-design Directive 2009/125/EC, (EU) 2019/1782, Case Color/Style: GlobTek Black, Wall Plug-in, Regulated Switchmode AC-DC Power Supply AC Adaptor, Input Rating: 100-240V~, 50-60 Hz, Interchangeable Blades, https://www.globtek.com/interchangeable-blades.php, Output Rating: 6.00W, 5.95V@1.0A, Pin Out: Polarity Configuration T00 All plugs are Medical Grade, Locking, Polarized once installed, and single use only. Product demonstration link: https://en.globtek.com/news/t00-changeable-output-plug-system-for-power-supplies MOLDED CONNECTORS AVAILABLE, Output Configuration: 1500 mm, 18/2 Cond, Round Black, T-plug system (includes 5.5x2.5, 5.5x2.1, 3.5x1.3mm plugs in each kit), Ferrite: None, GlobTek Black, GT Cord # C3775, Blades/Input Cord: Q-Series N. American, Approvals: | |
| Model No. GTM96060-0606-0.05 | |
| Part No./Ordering No. WR9QB1000T00NAIMR6B | Rev B |

01. United States / Canada / Japan NEMA 1-15P/ IEC PLUG Type A [WORKS IN PLUG B] configuration: NA 2 blades, Class II; US/CA/JP P/N: Q-NA(R)
02. Australian AS 3112 configuration: SAA 2 blade/ IEC TYPE I, Class II; AU P/N: Q-SAA(R)
03. UK BS 1363 configuration: UK 3 blade with dummy Ground/ IEC TYPE G, Class II; GB P/N: Q-UK(R)
04. European CEE 7/16 configuration: Europlug 2 pins/ IEC TYPE C [WORKS IN TYPE E&F], Class II; EU P/N: Q-EU(R)
05. Korean KS C8305 configuration: 2 pins/SIMILAR TO IEC TYPE C, Class II; KR P/N: Q-KR(R)
06. Argentina IRAM 2073 configuration: 2 blades/SIMILAR TO IEC TYPE I; AR P/N: Class II Q-AR(R)
07. China GB 2099 configuration: 2 blades/SIMILAR TO TYPE A, Class II; CN P/N:Q-CN(R)
08. India IS 1293 6A/BS546 configuration: 5A, 3 pins with Dummy Ground, Class II/IEC TYPE D; IN P/N: Q-IN(R)
09. IEC60320/C18 Inlet, Class II; P/N: Q-C18(R)
10. Brazilian NBR6147 configuration: 2 pins, Class II;SIMILAR TO IEC TYPE C BR P/N: Q-BR(R)
11. South Africa SABS164-1 and India IS 1293, IS694, 16A type plug, 3 round prongs, Class II + dummy ground, IEC TYPE M P/N: Q-SANS164-1-16A(R)
12. South Africa SABS164-4, 3 round prongs with a notched prong @ 0º, Class II + dummy ground, IEC TYPE M Red, P/N:
Q-SANS164-4C-16A(R)
13. South Africa SABS164-4, 3 round prongs with a notched prong @ -53º, Class II + dummy ground, Blue, IEC TYPE M, P/N:
Q-SANS164-4L-16A(R)
14. South Africa SABS164-4, 3 round prongs with a notched prong @ +53º, Class II + dummy ground, Black,IEC TYPE M P/N:
Q-SANS164-4R-16A(R)

Kits

01. Q-KIT: 1,2,3,4 above
02. Q-KIT-INTL: 2,3,4 above
03. Q-KIT-6: 1,2,3,4,5,6 above
04. Q-KIT-7: 1,2,3,4,5,6,7 above
05. Q-KIT-8: 1,2,3,4,5,6,7,8 above

PROPRIETARY INFORMATION
PROPRIETARY OF GLOBTEK, INC. ANY REPRODUCTION, DISCLOSURE OR USE OF THIS DRAWING, IN WHOLE OR IN PART, IS HEREBY PROHIBITED EXCEPT AS SPECIFIED IN WRITING BY GLOBTEK, INC. © GlobTek, Inc. 2017 - 2024
guest / 05/27/2024 2:35:02 PM GMT

GlobTek, Inc.
www.globtek.com
186 Veterans Drive,
Northvale, NJ 07647
Tel. (201) 784-1000
Fax (201) 784-0111

Drawing Title: GTM96060-0606-0.05, ICT / ITE / Medical Power Supply/Class 2/Household Power Supply, Efficiency Level: USA DOE Level VI / Eco-design Directive 2009/125/EC, (EU) 2019/1782, Case Color/Style: GlobTek Black, Wall Plug-in, Regulated Switchmode AC-DC Power Supply AC Adaptor, Input Rating: 100-240V~, 50-60 Hz, Interchangeable Blades, https://www.globtek.com/interchangeable-blades.php, Output Rating: 6.00W, 5.95V@1.0A, Pin Out: Polarity Configuration T00 All plugs are Medical Grade, Locking, Polarized once installed, and single use only. Product demonstration link: https://en.globtek.com/news/t00-changeable-output-plug-system-for-power-supplies MOLDED CONNECTORS AVAILABLE, Output Configuration: 1500 mm, 18/2 Cond, Round Black, T-plug system (includes 5.5x2.5, 5.5x2.1, 3.5x1.3mm plugs in each kit), Ferrite: None, GlobTek Black, GT Cord # C3775, Blades/Input Cord: Q-Series N. American, Approvals:

Model No. GTM96060-0606-0.05

Part No./Ordering No. WR9QB1000T00NAIMR6B | Rev B

## OUTPUT CORD AND CONNECTOR: T00/C3775

ACTUAL CONNECTORS, OVERMOLDS, FERRITES MAY VARY SLIGHTLY FROM THE PICTURE BELOW

| | |
|---|---|
| CABLE TYPE | Round Black |
| CABLE LENGTH (mm) | 1500 |
| CABLE TOLERANCE (mm) | ± 50 |
| WIRE GAUGE (AWG) | 18 |
| CONDUCTORS | 2 |
| HANK DIMENSION (mm) | 80 ± 10 |
| CABLE / CONNECTOR OVERMOLD COLOR | GlobTek Black |
| FERRITE TYPE AND DIMENSION | None |
| FERRITE NUMBER OF TURNS(Definition) | N/A |
| FERRITE DIMENSION FROM STRAIN RELIEF | N/A |
| FERRITE DIMENSION FROM PLUG | N/A |
| PLUG TYPE | T-plug system (includes 5.5x2.5, 5.5x2.1, 3.5x1.3mm plugs in each kit) |
| OUTPUT CONNECTOR GENDER | not applicable |
| OVERMOLDED | Yes |
| OVER MOLD ORIENTATION | Straight |
| CONNECTOR PIN OUT | Polarity Configuration T00 All plugs are Medical Grade, Locking, Polarized once installed, and single use only. Product demonstration link: https://en.globtek.com/news/t00-changeable-output-plug-system-for-power-supplies MOLDED CONNECTORS AVAILABLE |
| ADDITIONAL REQUIREMENTS | UL1310 Warning Label Up To 36 Volts with plugs |

This novel system allows for rapid shipment of prototype samples or small quantities of common output voltage and current which can fullfill the needs of most common barrel plug specs. The table below explains the standard and non standard options available as part of this system. This system also allows for both Center Positive and Center Negative polarity.
The T00 plug and adapters are Medical Grade, single use only, Polarized after installation, and not removable without use of special tool.
Any of the below options, and more, are available as molded plugs from stock or special order. Please contact GlobTek for more information.

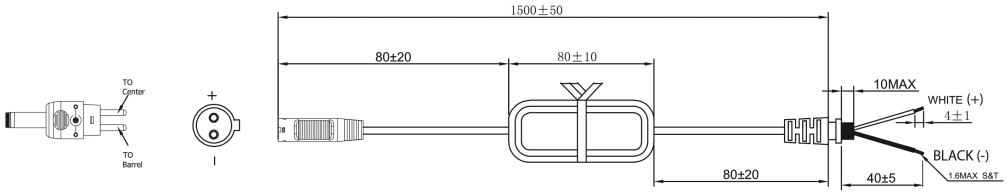


Cable OD 4.8 ± 0.15 mm
Individual conductor (Black & White) OD value of this 18 AWG cable is 2.0 ± 0.1 mm

PROPRIETARY INFORMATION
PROPRIETARY OF GLOBTEK, INC. ANY REPRODUCTION, DISCLOSURE OR USE OF THIS DRAWING, IN WHOLE OR IN PART, IS HEREBY PROHIBITED EXCEPT AS SPECIFIED IN WRITING BY GLOBTEK, INC. © GlobTek, Inc. 2017 - 2024
guest / 05/27/2024 2:35:02 PM GMT

GlobTek, Inc.
www.globtek.com
186 Veterans Drive,
Northvale, NJ 07647
Tel. (201) 784-1000
Fax (201) 784-0111

| | |
|---|---|
| Drawing Title: GTM96060-0606-0.05, ICT / ITE / Medical Power Supply/Class 2/Household Power Supply, Efficiency Level: USA DOE Level VI / Eco-design Directive 2009/125/EC, (EU) 2019/1782, Case Color/Style: GlobTek Black, Wall Plug-in, Regulated Switchmode AC-DC Power Supply AC Adaptor, Input Rating: 100-240V~, 50-60 Hz, Interchangeable Blades, https://www.globtek.com/interchangeable-blades.php, Output Rating: 6.00W, 5.95V@1.0A, Pin Out: Polarity Configuration T00 All plugs are Medical Grade, Locking, Polarized once installed, and single use only. Product demonstration link: https://en.globtek.com/news/t00-changeable-output-plug-system-for-power-supplies MOLDED CONNECTORS AVAILABLE, Output Configuration: 1500 mm, 18/2 Cond, Round Black, T-plug system (includes 5.5x2.5, 5.5x2.1, 3.5x1.3mm plugs in each kit), Ferrite: None, GlobTek Black, GT Cord # C3775, Blades/Input Cord: Q-Series N. American, Approvals: | |
| Model No. GTM96060-0606-0.05 | |
| Part No./Ordering No. WR9QB1000T00NAIMR6B | Rev B |

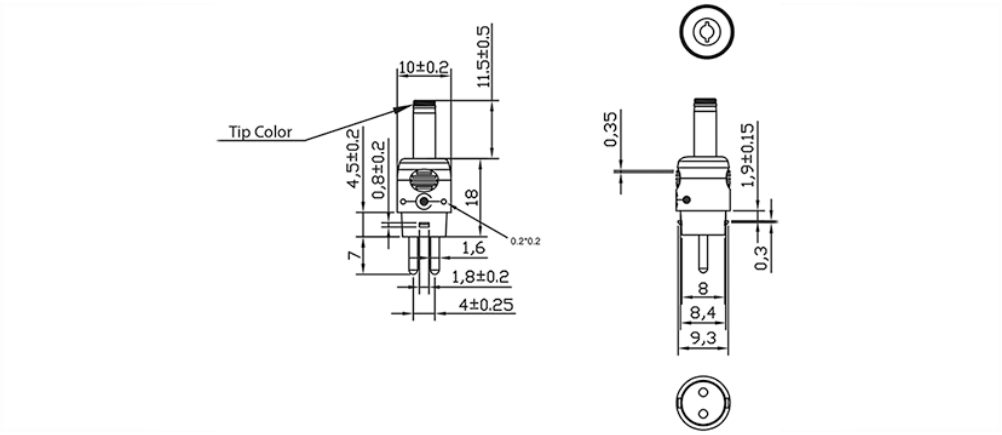


Option upon request: STRAIGHT Female Barrels are available for special order in any length between 9mm-14mm

This novel system allows for rapid shipment of prototype samples or small quantities of common output voltage and current which can fulfill the needs of most common barrel plug as well as male plug specs. The table explains the standard and non-standard options available as part of this system. This system also allows for both Center Positive and Center Negative
polarity.

The T00 plug and adapters are Medical Grade, single use only, Polarized after installation, and not removable without use of special tool.

Any of the below options, and more, are available as molded plugs from stock or special order. Please contact GlobTek for more information

ADDITIONAL OUTPUT PLUG OPTIONS ARE AVAILABLE AT https://www.globtek.com/en/connectors
STANDARD PLUGS AND CONNECTORS CAN BE SEEN ONLINE AT https://www.globtek.com/en/connectors
CALCULATE VOLTAGE REGULATION/DROP WITH OUR ONLINE CALCULATOR: https://www.globtek.com/r2/PtqjjL

PROPRIETARY INFORMATION
PROPRIETARY OF GLOBTEK, INC. ANY REPRODUCTION, DISCLOSURE OR USE OF THIS DRAWING, IN WHOLE OR IN PART, IS HEREBY PROHIBITED EXCEPT AS SPECIFIED IN WRITING BY GLOBTEK, INC. © GlobTek, Inc. 2017 - 2024
guest / 05/27/2024 2:35:02 PM GMT

GlobTek, Inc.
www.globtek.com
186 Veterans Drive,
Northvale, NJ 07647
Tel. (201) 784-1000
Fax (201) 784-0111

| | |
|---|---|
| Drawing Title: GTM96060-0606-0.05, ICT / ITE / Medical Power Supply/Class 2/Household Power Supply, Efficiency Level: USA DOE Level VI / Eco-design Directive 2009/125/EC, (EU) 2019/1782, Case Color/Style: GlobTek Black, Wall Plug-in, Regulated Switchmode AC-DC Power Supply AC Adaptor, Input Rating: 100-240V~, 50-60 Hz, Interchangeable Blades, https://www.globtek.com/interchangeable-blades.php, Output Rating: 6.00W, 5.95V@1.0A, Pin Out: Polarity Configuration T00 All plugs are Medical Grade, Locking, Polarized once installed, and single use only. Product demonstration link: https://en.globtek.com/news/t00-changeable-output-plug-system-for-power-supplies MOLDED CONNECTORS AVAILABLE, Output Configuration: 1500 mm, 18/2 Cond, Round Black, T-plug system (includes 5.5x2.5, 5.5x2.1, 3.5x1.3mm plugs in each kit), Ferrite: None, GlobTek Black, GT Cord # C3775, Blades/Input Cord: Q-Series N. American, Approvals: | |
| Model No. GTM96060-0606-0.05 | |
| Part No./Ordering No. WR9QB1000T00NAIMR6B | Rev B |

## OUTPUT CONNECTOR HOOK UP

TO ADDRESS SYSTEM-LEVEL EMI CONCERNS, FERRITE CHOKES/BEADS MAY BE ADDED/REVISED UPON REQUEST. A SAMPLE KIT OF GLOBTEK'S STANDARD FERRITES IS AVAILABLE UNDER GLOBTEK P/N: EMI-MITIGATION-KIT1

FOR ADDITIONAL INFORMATION, PLEASE READ OUR WHITE PAPER AT:
https://www.globtek.com/en/technical-articles/ferrite-kit-radiated-emi-suppression-kit-for-globtek-power-supplies-cable-assemblies

PROPRIETARY INFORMATION
PROPRIETARY OF GLOBTEK, INC. ANY REPRODUCTION, DISCLOSURE OR USE OF THIS DRAWING, IN WHOLE OR IN PART, IS HEREBY PROHIBITED EXCEPT AS SPECIFIED IN WRITING BY GLOBTEK, INC. © GlobTek, Inc. 2017 - 2024
guest / 05/27/2024 2:35:02 PM GMT

| | | |
|---|---|---|
| GlobTek, Inc.<br>www.globtek.com<br>186 Veterans Drive,<br>Northvale, NJ 07647<br>Tel. (201) 784-1000<br>Fax (201) 784-0111 | Drawing Title: GTM96060-0606-0.05, ICT / ITE / Medical Power Supply/Class 2/Household Power Supply, Efficiency Level: USA DOE Level VI / Eco-design Directive 2009/125/EC, (EU) 2019/1782, Case Color/Style: GlobTek Black, Wall Plug-in, Regulated Switchmode AC-DC Power Supply AC Adaptor, Input Rating: 100-240V~, 50-60 Hz, Interchangeable Blades, https://www.globtek.com/interchangeable-blades.php, Output Rating: 6.00W, 5.95V@1.0A, Pin Out: Polarity Configuration T00 All plugs are Medical Grade, Locking, Polarized once installed, and single use only. Product demonstration link: https://en.globtek.com/news/t00-changeable-output-plug-system-for-power-supplies MOLDED CONNECTORS AVAILABLE, Output Configuration: 1500 mm, 18/2 Cond, Round Black, T-plug system (includes 5.5x2.5, 5.5x2.1, 3.5x1.3mm plugs in each kit), Ferrite: None, GlobTek Black, GT Cord # C3775, Blades/Input Cord: Q-Series N. American, Approvals: | |
| | Model No. GTM96060-0606-0.05 | |
| | Part No./Ordering No. WR9QB1000T00NAIMR6B | Rev B |

LABEL:L-1186

| | |
|---|---|
| LABEL P/N | Standard GT |
| MATERIAL | Flat Thermal Transfer, Imprintable, Polyester Label and/or Pad Printed and/or Molded, and/or Laser Engraved in the case |
| BACKGROUND COLOR | Black if housing is Black, White or Silver if housing is White or Gray. |
| TEXT COLOR | White or Silver if label is Black Background for Black housing. Black if label is White or Silver background and Housing is White or Gray. |
| LABEL WIDTH (mm) | 29.8 |
| LABEL HEIGHT (mm) | 20.8 |
| SPECIAL BARCODE LABEL MATERIAL | No |

Below is the minimum information which will appear on the label. NOTE: in the logo area additional/actual positioning of symbols and text is subjected to change as per agency updates/requirements or additional model approvals become available.
Regulatory certifications/label markings may be in logo area on the label or molded into the case housing outside the label area.
Information will be shown via label and/or pad printed and/or molded and/or laser engraved in the case. * Date code markings at GlobTek option
.

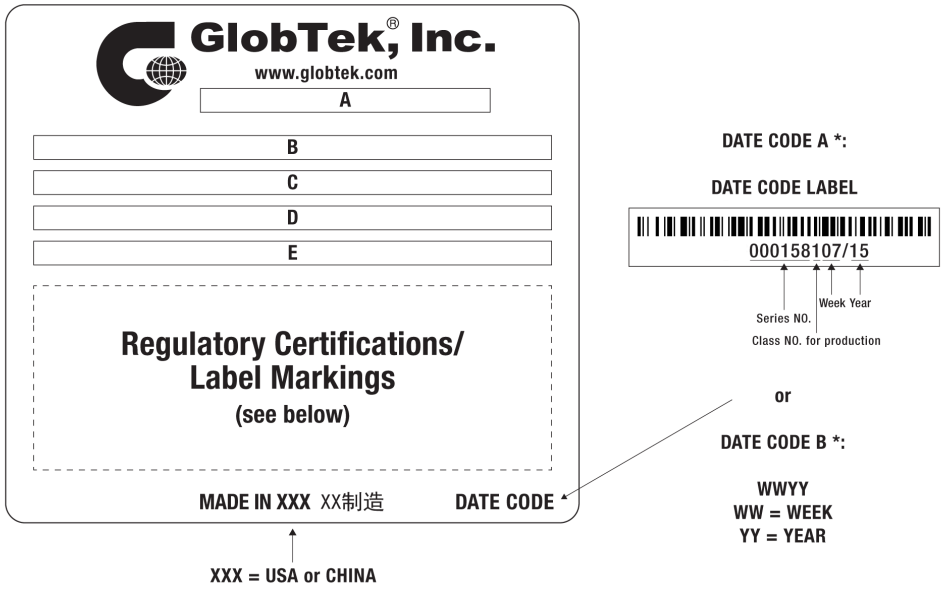


A=ICT / ITE / Medical Power Supply/Class 2/Household Power Supply
B=P/N: (料号) WR9QB1000T00NAIMR6B
C=Model (型号) GTM96060-0606-0.05
D=Input (输入)100-240V~, 50-60 Hz, 0.6 A
E=Output (输出)5.95 V ⎓ 1.0 A, 6.00W

PROPRIETARY INFORMATION
PROPRIETARY OF GLOBTEK, INC. ANY REPRODUCTION, DISCLOSURE OR USE OF THIS DRAWING, IN WHOLE OR IN PART, IS HEREBY PROHIBITED EXCEPT AS SPECIFIED IN WRITING BY GLOBTEK, INC. © GlobTek, Inc. 2017 - 2024
guest / 05/27/2024 2:35:02 PM GMT

GlobTek, Inc.
www.globtek.com
186 Veterans Drive,
Northvale, NJ 07647
Tel. (201) 784-1000
Fax (201) 784-0111

| | |
|---|---|
| Drawing Title: GTM96060-0606-0.05, ICT / ITE / Medical Power Supply/Class 2/Household Power Supply, Efficiency Level: USA DOE Level VI / Eco-design Directive 2009/125/EC, (EU) 2019/1782, Case Color/Style: GlobTek Black, Wall Plug-in, Regulated Switchmode AC-DC Power Supply AC Adaptor, Input Rating: 100-240V~, 50-60 Hz, Interchangeable Blades, https://www.globtek.com/interchangeable-blades.php, Output Rating: 6.00W, 5.95V@1.0A, Pin Out: Polarity Configuration T00 All plugs are Medical Grade, Locking, Polarized once installed, and single use only. Product demonstration link: https://en.globtek.com/news/t00-changeable-output-plug-system-for-power-supplies MOLDED CONNECTORS AVAILABLE, Output Configuration: 1500 mm, 18/2 Cond, Round Black, T-plug system (includes 5.5x2.5, 5.5x2.1, 3.5x1.3mm plugs in each kit), Ferrite: None, GlobTek Black, GT Cord # C3775, Blades/Input Cord: Q-Series N. American, Approvals: | |
| Model No. GTM96060-0606-0.05 | |
| Part No./Ordering No. WR9QB1000T00NAIMR6B | Rev B |

| | |
|---|---|
| AGENCY ONLINE DOCUMENTS | http://www.globtek.info/certs/GTM96060/ |
| CE EC-Declaration for Medical | https://cs.globtek.info/ec_declaration_product?id=01ta0000007dRIi&m=1 |
| CE EC-Declaration for Industrial/Commercial/ITE | https://cs.globtek.info/ec_declaration_product?id=01ta0000007dRIi&i=2 |
| CE EC-Declaration for Household | https://cs.globtek.info/ec_declaration_product?id=01ta0000007dRIi&h=2 |
| UKCA-Declaration for Medical | https://cs.globtek.info/ukca_declaration_product?id=01ta0000007dRIi&m=1 |
| UKCA-Declaration for Industrial/Commercial/ITE | https://cs.globtek.info/ukca_declaration_product?id=01ta0000007dRIi&i=2 |
| UKCA-Declaration for Household | https://cs.globtek.info/ukca_declaration_product?id=01ta0000007dRIi&h=2 |
| Morocco SDoC Declaration | https://cs.globtek.info/Morocco_SDoC_Declaration?id=a0Oa000000NrvDbEAJ |
| RoHS/RoHS3 Declaration | https://www.globtek.com/pdf/rohs_cert/01ta0000007dRIiAAM |
| REACH Declaration | https://www.globtek.com/pdf/iso_certificates/REACH.pdf |
| Conflict Minerals Declaration | https://www.globtek.com/pdf/conflict-minerals.pdf |
| Prop 65 Statement | https://www.globtek.com/prop-65-statement.pdf |

IPXY rating is based on 3rd party testing and customers should check suitability and test system level IPXY rating before ordering.

## Regulatory Certifications/Label Markings

Below follows a link to the latest regulatory certifications and marks for this specific product. National standards as well as certification schemes are constantly changing and so is the set of certification marks and symbols applicable to this product. Various standards, marks and symbols, and certificates are subject to change at any time without notice.

Additional standards or unique country certifications are available upon request. Please contact Globtek to request a quotation.

| | |
|---|---|
| LATEST PRODUCT/MODEL CERTIFICATIONS: | https://www.globtek.com/ds/PqGxTvoh8qy/Yi8bNqiuJiu.html |
| AGENCY ONLINE DOCUMENTS | http://www.globtek.info/certs/GTM96060/ |



(F1) Floating output, Class II / double insulated




Polarity Configuration T00 All plugs are Medical Grade, Locking, Polarized once installed, and single use only.
Product demonstration link:
https://en.globtek.com/news/t00-changeable-output-plug-system-for-power-s

MOLDED CONNECTORS AVAILABLE

PROPRIETARY INFORMATION
PROPRIETARY OF GLOBTEK, INC. ANY REPRODUCTION, DISCLOSURE OR USE OF THIS DRAWING, IN WHOLE OR IN PART, IS HEREBY PROHIBITED EXCEPT AS SPECIFIED IN WRITING BY GLOBTEK, INC. © GlobTek, Inc. 2017 - 2024
guest / 05/27/2024 2:35:02 PM GMT

GlobTek, Inc.
www.globtek.com
186 Veterans Drive,
Northvale, NJ 07647
Tel. (201) 784-1000
Fax (201) 784-0111

| | |
|---|---|
| Drawing Title: GTM96060-0606-0.05, ICT / ITE / Medical Power Supply/Class 2/Household Power Supply, Efficiency Level: USA DOE Level VI / Eco-design Directive 2009/125/EC, (EU) 2019/1782, Case Color/Style: GlobTek Black, Wall Plug-in, Regulated Switchmode AC-DC Power Supply AC Adaptor, Input Rating: 100-240V~, 50-60 Hz, Interchangeable Blades, https://www.globtek.com/interchangeable-blades.php, Output Rating: 6.00W, 5.95V@1.0A, Pin Out: Polarity Configuration T00 All plugs are Medical Grade, Locking, Polarized once installed, and single use only. Product demonstration link: https://en.globtek.com/news/t00-changeable-output-plug-system-for-power-supplies MOLDED CONNECTORS AVAILABLE, Output Configuration: 1500 mm, 18/2 Cond, Round Black, T-plug system (includes 5.5x2.5, 5.5x2.1, 3.5x1.3mm plugs in each kit), Ferrite: None, GlobTek Black, GT Cord # C3775, Blades/Input Cord: Q-Series N. American, Approvals: | |
| Model No. GTM96060-0606-0.05 | |
| Part No./Ordering No. WR9QB1000T00NAIMR6B | Rev B |

## PACKAGING

| | |
|---|---|
| Packing Spec P/N | Packing for Wall plug model with T00 plug and manual |
| Box Qty | 60 |
| Gift Box Size (mm) | 100*90*58 |
| Gift Box Color | White |
| Master Carton Size (mm) | 480 x 450 x 205 |
| Master Carton Cubic Volume ($m^3$) | 0.04 |
| Master GW (Kg) | 15.2 kg |
| BLADES INCLUDED | Q-NA(R): Q-Series N. American |
| BLADE/CORD INSTALLED | Q-NA(R): Q-Series N. American |
| USER MANUAL* | 809-PSUQKITUSERMANUAL on A4 paper |
| USER MANUAL WEB LINK | https://www.globtek.com/pdf/809-PSUQKITUSERMANUAL.jpg |

* This specification sheet is considered the user manual for all applications. It is expected that the buyer of this product will use it to formulate their own user manual for their end product and a user manual specifically for the power adapter is not usually required. If a user manual is not specifically listed above then none will be provided with this unit.

PROPRIETARY INFORMATION
PROPRIETARY OF GLOBTEK, INC. ANY REPRODUCTION, DISCLOSURE OR USE OF THIS DRAWING, IN WHOLE OR IN PART, IS HEREBY PROHIBITED EXCEPT AS SPECIFIED IN WRITING BY GLOBTEK, INC. © GlobTek, Inc. 2017 - 2024
guest / 05/27/2024 2:35:02 PM GMT

| | | |
|---|---|---|
| GlobTek, Inc.<br>www.globtek.com<br>186 Veterans Drive,<br>Northvale, NJ 07647<br>Tel. (201) 784-1000<br>Fax (201) 784-0111 | Drawing Title: GTM96060-0606-0.05, ICT / ITE / Medical Power Supply/Class 2/Household Power Supply, Efficiency Level: USA DOE Level VI / Eco-design Directive 2009/125/EC, (EU) 2019/1782, Case Color/Style: GlobTek Black, Wall Plug-in, Regulated Switchmode AC-DC Power Supply AC Adaptor, Input Rating: 100-240V~, 50-60 Hz, Interchangeable Blades, https://www.globtek.com/interchangeable-blades.php, Output Rating: 6.00W, 5.95V@1.0A, Pin Out: Polarity Configuration T00 All plugs are Medical Grade, Locking, Polarized once installed, and single use only. Product demonstration link: https://en.globtek.com/news/t00-changeable-output-plug-system-for-power-supplies MOLDED CONNECTORS AVAILABLE, Output Configuration: 1500 mm, 18/2 Cond, Round Black, T-plug system (includes 5.5x2.5, 5.5x2.1, 3.5x1.3mm plugs in each kit), Ferrite: None, GlobTek Black, GT Cord # C3775, Blades/Input Cord: Q-Series N. American, Approvals: | |
| | Model No. GTM96060-0606-0.05 | |
| | Part No./Ordering No. WR9QB1000T00NAIMR6B | Rev B |

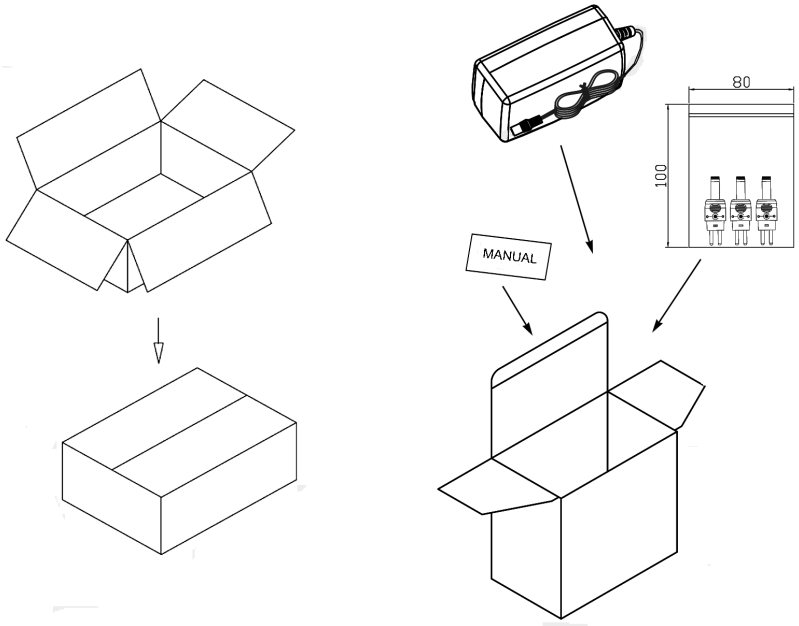


Manual for T00-plug:

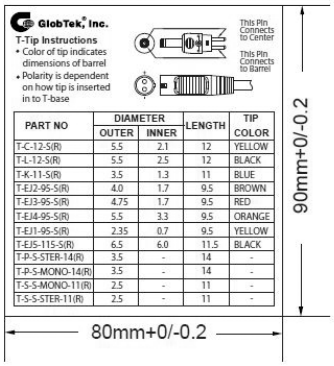


| PART NO | DIAMETER | | LENGTH | TIP |
|---|---|---|---|---|
| | OUTER | INNER | | COLOR |
| T-C-12-S(R) | 5.5 | 2.1 | 12 | YELLOW |
| T-L-12-S(R) | 5.5 | 2.5 | 12 | BLACK |
| T-K-11-S(R) | 3.5 | 1.3 | 11 | BLUE |
| T-EJ2-95-S(R) | 4.0 | 1.7 | 9.5 | BROWN |
| T-EJ3-95-S(R) | 4.75 | 1.7 | 9.5 | RED |
| T-EJ4-95-S(R) | 5.5 | 3.3 | 9.5 | ORANGE |
| T-EJ1-95-S(R) | 2.35 | 0.7 | 9.5 | YELLOW |
| T-EJS-115-S(R) | 6.5 | 6.0 | 11.5 | BLACK |
| T-P-S-STER-14(R) | 3.5 | - | 14 | - |
| T-P-S-MONO-14(R) | 3.5 | - | 14 | - |
| T-S-S-MONO-11(R) | 2.5 | - | 11 | - |
| T-S-S-STER-11(R) | 2.5 | - | 11 | - |

正面/SHEET A

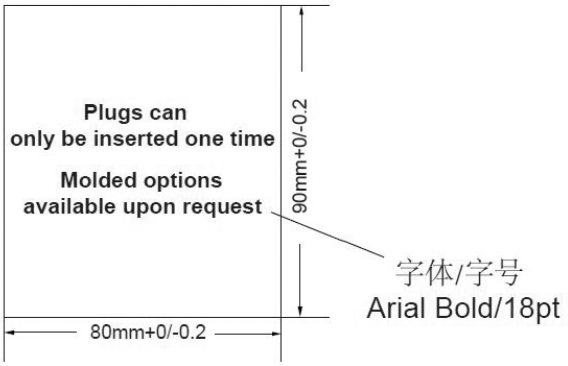


反面/SHEET B


PROPRIETARY OF GLOBTEK, INC. ANY REPRODUCTION, DISCLOSURE OR USE OF THIS DRAWING, IN WHOLE OR IN PART, IS HEREBY PROHIBITED EXCEPT AS SPECIFIED IN WRITING BY GLOBTEK, INC. © GlobTek, Inc. 2017 - 2024
guest / 05/27/2024 2:35:02 PM GMT

GlobTek, Inc.
www.globtek.com
186 Veterans Drive,
Northvale, NJ 07647
Tel. (201) 784-1000
Fax (201) 784-0111

| | |
|---|---|
| Drawing Title: GTM96060-0606-0.05, ICT / ITE / Medical Power Supply/Class 2/Household Power Supply, Efficiency Level: USA DOE Level VI / Eco-design Directive 2009/125/EC, (EU) 2019/1782, Case Color/Style: GlobTek Black, Wall Plug-in, Regulated Switchmode AC-DC Power Supply AC Adaptor, Input Rating: 100-240V~, 50-60 Hz, Interchangeable Blades, https://www.globtek.com/interchangeable-blades.php, Output Rating: 6.00W, 5.95V@1.0A, Pin Out: Polarity Configuration T00 All plugs are Medical Grade, Locking, Polarized once installed, and single use only. Product demonstration link: https://en.globtek.com/news/t00-changeable-output-plug-system-for-power-supplies MOLDED CONNECTORS AVAILABLE, Output Configuration: 1500 mm, 18/2 Cond, Round Black, T-plug system (includes 5.5x2.5, 5.5x2.1, 3.5x1.3mm plugs in each kit), Ferrite: None, GlobTek Black, GT Cord # C3775, Blades/Input Cord: Q-Series N. American, Approvals: | |
| Model No. GTM96060-0606-0.05 | |
| Part No./Ordering No. WR9QB1000T00NAIMR6B | Rev B |

## INSTRUCTIONS TO THE OEM SYSTEMS ENGINEER

It is the responsibility of the OEM systems engineer to provide the end system user instructions and warnings for the use of this product in the end system.

If an input cord is required for this product, AC Mains voltage should be provided to the power supply by a power supply cord approved to the national standards of the country in which it will be used.

This product is not designed to be repaired. No serviceable parts inside. A blown internal fuse is an indication of catastrophic failure of circuit component(s). If a Failure Analysis is required for a failed power supply/battery charger, please return the damaged unit to GlobTek for an accurate determination of the root cause of the failure.

EMC Compliance of the complete OEM product, including the GlobTek power supply/battery charger needs to be verified by the OEM systems engineer.

PROPRIETARY INFORMATION
PROPRIETARY OF GLOBTEK, INC. ANY REPRODUCTION, DISCLOSURE OR USE OF THIS DRAWING, IN WHOLE OR IN PART, IS HEREBY PROHIBITED EXCEPT AS SPECIFIED IN WRITING BY GLOBTEK, INC. © GlobTek, Inc. 2017 - 2024
guest / 05/27/2024 2:35:02 PM GMT

GlobTek, Inc.
www.globtek.com
186 Veterans Drive,
Northvale, NJ 07647
Tel. (201) 784-1000
Fax (201) 784-0111

| | |
|---|---|
| Drawing Title: GTM96060-0606-0.05, ICT / ITE / Medical Power Supply/Class 2/Household Power Supply, Efficiency Level: USA DOE Level VI / Eco-design Directive 2009/125/EC, (EU) 2019/1782, Case Color/Style: GlobTek Black, Wall Plug-in, Regulated Switchmode AC-DC Power Supply AC Adaptor, Input Rating: 100-240V~, 50-60 Hz, Interchangeable Blades, https://www.globtek.com/interchangeable-blades.php, Output Rating: 6.00W, 5.95V@1.0A, Pin Out: Polarity Configuration T00 All plugs are Medical Grade, Locking, Polarized once installed, and single use only. Product demonstration link: https://en.globtek.com/news/t00-changeable-output-plug-system-for-power-supplies MOLDED CONNECTORS AVAILABLE, Output Configuration: 1500 mm, 18/2 Cond, Round Black, T-plug system (includes 5.5x2.5, 5.5x2.1, 3.5x1.3mm plugs in each kit), Ferrite: None, GlobTek Black, GT Cord # C3775, Blades/Input Cord: Q-Series N. American, Approvals: | |
| Model No. GTM96060-0606-0.05 | |
| Part No./Ordering No. WR9QB1000T00NAIMR6B | Rev B |

INSTRUCTION SHEET

Q Blades Instruction Sheet (not required to be packaged with product)

Insertion Instructions: http://www.globtek.com/pdf/Instructions-Interchangeable-Blades.pdf

This manual is Provided to customer within the product specification - it is the responsibility of the OEM/customer to provide the end system user instructions + warnings for the use of this product in the end system. By accepting this specification the customer/OEM Agrees to these terms.

USER MANUAL FOR Q-BLADE SERIES SWITCHING POWER SUPPLIES

Manual del Usuario. Fuentes de Alimentación Series Q-Blade

WARNING! RISK OF FIRE! SHOCK HAZARD!: To prevent electric shock, do not remove the cover. No user-serviceable parts inside. This unit contains hazardous voltages and should only be opened by a trained and qualified technician. Do not use if bent, cracked, modifed or compromised. To avoid the possibility of electric shock, disconnect electric power to the product before connecting or disconnecting.

Advertencia! Riesgo de Fuego! Peligro de Choque eléctrico! No contiene dentro componentes servibles para el usuario. Desconecte el cable de alimentación antes de quitar la cubierta.

INDOOR USE ONLY!

Únicamente para uso en el interior.

POWER SUPPLY BLADE/CORD: AC Mains voltage should be provided to the power supply by a power supply cords approved to the national standards in which it will be used. Please use the below table as a guideline for Suitable Power cords.

CABLE DE ALIMENTACIÓN: El voltaje de la CA debe proporcionarse a la fuente de alimentación mediante los cables de alimentación aprobados conforme a las normas nacionales según las cuales será utilizada. Utilice por favor la tabla mencionada aquí abajo como guía para los cables eléctricos adecuados.

PROPRIETARY INFORMATION
PROPRIETARY OF GLOBTEK, INC. ANY REPRODUCTION, DISCLOSURE OR USE OF THIS DRAWING, IN WHOLE OR IN PART, IS HEREBY PROHIBITED EXCEPT AS SPECIFIED IN WRITING BY GLOBTEK, INC. © GlobTek, Inc. 2017 - 2024
guest / 05/27/2024 2:35:02 PM GMT

GlobTek, Inc.
www.globtek.com
186 Veterans Drive,
Northvale, NJ 07647
Tel. (201) 784-1000
Fax (201) 784-0111

| | |
|---|---|
| Drawing Title: GTM96060-0606-0.05, ICT / ITE / Medical Power Supply/Class 2/Household Power Supply, Efficiency Level: USA DOE Level VI / Eco-design Directive 2009/125/EC, (EU) 2019/1782, Case Color/Style: GlobTek Black, Wall Plug-in, Regulated Switchmode AC-DC Power Supply AC Adaptor, Input Rating: 100-240V~, 50-60 Hz, Interchangeable Blades, https://www.globtek.com/interchangeable-blades.php, Output Rating: 6.00W, 5.95V@1.0A, Pin Out: Polarity Configuration T00 All plugs are Medical Grade, Locking, Polarized once installed, and single use only. Product demonstration link: https://en.globtek.com/news/t00-changeable-output-plug-system-for-power-supplies MOLDED CONNECTORS AVAILABLE, Output Configuration: 1500 mm, 18/2 Cond, Round Black, T-plug system (includes 5.5x2.5, 5.5x2.1, 3.5x1.3mm plugs in each kit), Ferrite: None, GlobTek Black, GT Cord # C3775, Blades/Input Cord: Q-Series N. American, Approvals: | |
| Model No. GTM96060-0606-0.05 | |
| Part No./Ordering No. WR9QB1000T00NAIMR6B | Rev B |

1. Class II model NEMA 1-15P AC power plug with 2 prongs, Q-NA(R)
2. Australian AS 3112 configuration: SAA 2 pins Class II, Q-SAA(R)
3. UK BS 1363 configuration: UK 2 pins Class II, Q-UK(R)
4. European CEE 7/16 configuration: Europlug 2 PINS, Class II, Q-EU(R)
5. Korean KS C8305 configuration: Q-KR(R)
6. Argentina IRAM 2073 configuration: 2 pins, Class II Q-AR(R)
7. China GR 2099 configuration: 2 pins, Class II Q-CN(R)
8. India configuration: 2 pins, Class II, Q-IN(R)
9. IEC320/C18 Inlet

FUSING: Internal fuse for Line is provided in the power supply. A blown internal fuse is an indication of catastrophic failure of circuit component(s). Repair must be performed by GlobTek, Inc. authorized personnel. Fuses must be replaced with same type and ratings per GlobTek internal documentation.

PROPRIETARY INFORMATION
PROPRIETARY OF GLOBTEK, INC. ANY REPRODUCTION, DISCLOSURE OR USE OF THIS DRAWING, IN WHOLE OR IN PART, IS HEREBY PROHIBITED EXCEPT AS SPECIFIED IN WRITING BY GLOBTEK, INC. © GlobTek, Inc. 2017 - 2024
guest / 05/27/2024 2:35:02 PM GMT

FUSIBLES: La fuente de alimentación provee un fusible interno para la línea. Un fusible interno quemado es un indicador de una falla catastrófica de los componentes del circuito. La reparación debe ser hecha por personal autorizado de GlobTek, Inc. Los fusibles se deben reemplazar por los mismos tipos y rangos que la documentación interna de GlobTek mencione.

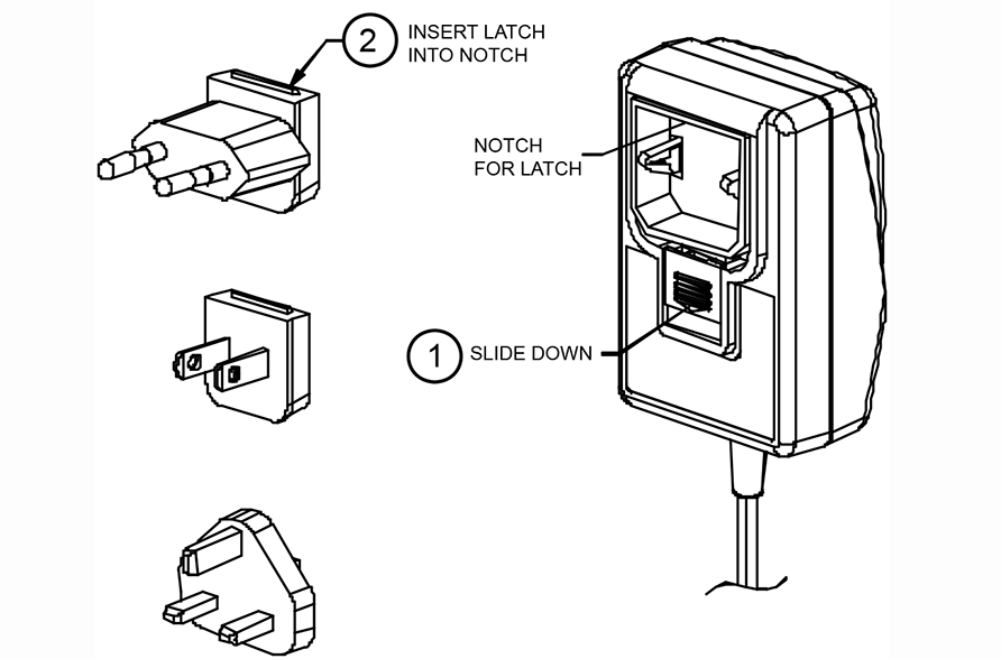


This symbol on an instrument indicates that the user should refer to the operating instructions located in the manual.

Please note:

The blades shown above are for representation of the installation process and do not indicate which AC blades are included with this power supply. Please reference the specifications “Power Supply Information” (page 2) and “Input Configuration (page 6) for information regarding the actual blade included with this power supply, if any.


PROPRIETARY INFORMATION

PROPRIETARY OF GLOBTEK, INC. ANY REPRODUCTION, DISCLOSURE OR USE OF THIS DRAWING, IN WHOLE OR IN PART, IS HEREBY PROHIBITED EXCEPT AS SPECIFIED IN WRITING BY GLOBTEK, INC. © GlobTek, Inc. 2017 - 2024

guest / 05/27/2024 2:35:02 PM GMT

GlobTek, Inc.
www.globtek.com
186 Veterans Drive,
Northvale, NJ 07647
Tel. (201) 784-1000
Fax (201) 784-0111

| | |
|---|---|
| Drawing Title: GTM96060-0606-0.05, ICT / ITE / Medical Power Supply/Class 2/Household Power Supply, Efficiency Level: USA DOE Level VI / Eco-design Directive 2009/125/EC, (EU) 2019/1782, Case Color/Style: GlobTek Black, Wall Plug-in, Regulated Switchmode AC-DC Power Supply AC Adaptor, Input Rating: 100-240V~, 50-60 Hz, Interchangeable Blades, https://www.globtek.com/interchangeable-blades.php, Output Rating: 6.00W, 5.95V@1.0A, Pin Out: Polarity Configuration T00 All plugs are Medical Grade, Locking, Polarized once installed, and single use only. Product demonstration link: https://en.globtek.com/news/t00-changeable-output-plug-system-for-power-supplies MOLDED CONNECTORS AVAILABLE, Output Configuration: 1500 mm, 18/2 Cond, Round Black, T-plug system (includes 5.5x2.5, 5.5x2.1, 3.5x1.3mm plugs in each kit), Ferrite: None, GlobTek Black, GT Cord # C3775, Blades/Input Cord: Q-Series N. American, Approvals: | |
| Model No. GTM96060-0606-0.05 | |
| Part No./Ordering No. WR9QB1000T00NAIMR6B | Rev B |

PROPRIETARY INFORMATION
PROPRIETARY OF GLOBTEK, INC. ANY REPRODUCTION, DISCLOSURE OR USE OF THIS DRAWING, IN WHOLE OR IN PART, IS HEREBY PROHIBITED EXCEPT AS SPECIFIED IN WRITING BY GLOBTEK, INC. © GlobTek, Inc. 2017 - 2024
guest / 05/27/2024 2:35:02 PM GMT