3-1761608-1 ✔ ACTIVE

AMP-LATCH

TE Internal #: 3-1761608-1

Ribbon Cable Connectors, Wire-to-Board, 34 Position, 2.54 mm [.1 in] Centerline, Vertical, Through Hole - Solder, 2 Row, Plug, Low Profile

View on TE.com >

Connectors > PCB Connectors > Wire-to-Board Connectors > FFC, FPC & Ribbon Connectors > Ribbon Cable Connectors

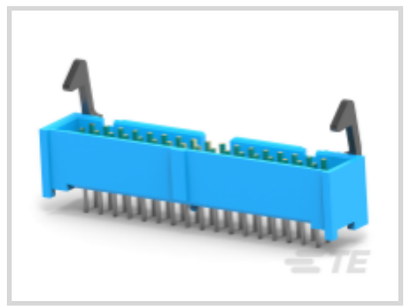

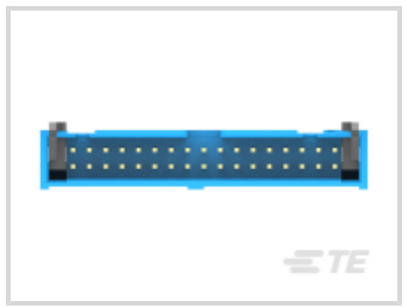
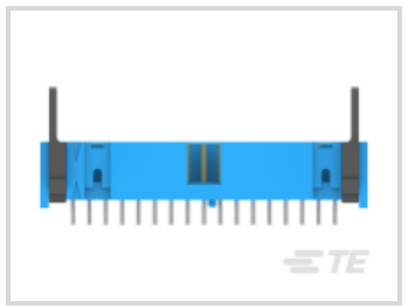
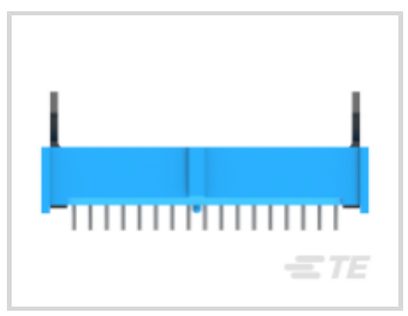

Connector System: **Wire-to-Board**

Number of Positions: **34**

Centerline (Pitch): **2.54 mm [.1 in]**

PCB Mount Retention: **Without**

PCB Mount Orientation: **Vertical**

Features

Product Type Features

Ribbon Cable Connector Header Type	Pin Header
Connector Product Type	Connector Assembly
Connector System	Wire-to-Board
Connector & Housing Type	Plug
Connector & Contact Terminates To	Printed Circuit Board

Configuration Features

Number of Positions	34
PCB Mount Orientation	Vertical
Number of Rows	2

Electrical Characteristics

Insulation Resistance	5000 MΩ
Operating Voltage	250 VAC

Body Features

Daisy Chain	With

Primary Product Color	Blue
Connector Profile	Low

Contact Features

PCB Contact Termination Area Plating Material Thickness	2.54 µm[100 µin]
Mating Pin Diameter	.64 mm[.025 in]
Contact Type	Pin
Contact Mating Area Plating Material Thickness	.762 µm[30 µin]
Contact Mating Area Plating Material	Gold Flash
Contact Shape & Form	Square
Contact Underplating Material	Nickel
PCB Contact Termination Area Plating Material	Tin
Contact Base Material	Phosphor Bronze
Contact Current Rating (Max)	1 A

Termination Features

Round Termination Post & Tail Diameter	.64 mm[.025 in]
Termination Post & Tail Length	2.6 mm[.102 in]
Termination Method to Printed Circuit Board	Through Hole - Solder

Mechanical Attachment

Mating Alignment	With
PCB Mount Alignment	Without
Panel Mount Feature	Without
PCB Mount Retention	Without
Mating Alignment Type	Center
Mating Retention	With
Mating Retention Type	Ejection Latch
Connector Mounting Type	Board Mount

Housing Features

Mating Entry Location	Top
Housing Material	PBT
Centerline (Pitch)	2.54 mm[.1 in]

Dimensions

Shrouded End Dimension	3.76 mm[.148 in]

Connector Length	50.8 mm[2 in]
Connector Height	9.19 mm[.36 in]
Row-to-Row Spacing	2.54 mm[.1 in]

Usage Conditions

Housing Temperature Rating	High
Operating Temperature Range	-65 - 105 °C[-85 - 221 °F]

Operation/Application

Circuit Application	Signal

Industry Standards

UL Flammability Rating	UL 94V-0

Packaging Features

Packaging Quantity	10
Packaging Method	Tube

Product Compliance

For compliance documentation, visit the product page on TE.com>

EU RoHS Directive 2011/65/EU	Compliant
EU ELV Directive 2000/53/EC	Compliant
China RoHS 2 Directive MIIT Order No 32, 2016	No Restricted Materials Above Threshold
EU REACH Regulation (EC) No. 1907/2006	Current ECHA Candidate List: JAN 2024 (240) Candidate List Declared Against: JAN 2024 (240) Does not contain REACH SVHC
Halogen Content	Not Low Halogen - contains Br or Cl > 900 ppm.
Solder Process Capability	Wave solder capable to 265°C

Product Compliance Disclaimer

This information is provided based on reasonable inquiry of our suppliers and represents our current actual knowledge based on the information they provided. This information is subject to change. The part numbers that TE has identified as EU RoHS compliant have a maximum concentration of 0.1% by weight in homogenous materials for lead, hexavalent chromium, mercury, PBB, PBDE, DBP, BBP, DEHP, DIBP, and 0.01% for cadmium, or qualify for an exemption to these limits as defined in the Annexes of Directive 2011/65/EU (RoHS2). Finished electrical and electronic equipment products will be CE marked as required by Directive 2011/65/EU. Components may not be CE marked. Additionally, the part numbers that TE has identified as EU ELV compliant have a maximum concentration of 0.1% by weight in homogenous materials for lead, hexavalent chromium, and mercury, and 0.01% for cadmium, or qualify for an exemption to these limits as defined in the Annexes of Directive 2000/53/EC (ELV). Regarding the REACH Regulation, the information TE provides

on SVHC in articles for this part number is based on the latest European Chemicals Agency (ECHA) 'Guidance on requirements for substances in articles' posted at this URL: https://echa.europa.eu/guidance-documents/guidance-on-reach

Compatible Parts

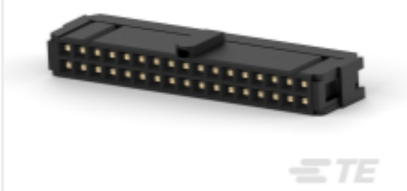

TE Part # 1658621-8
34 NOVO MIL/CTR 15DP,LEAD FREE

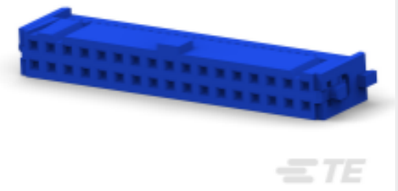

TE Part # 1-1658526-8
609-3430LF FEM SOCKT,LEAD FREE



TE Part # 1658622-8
34 NOVO MIL/CTR 30DP,LEAD FREE



TE Part # 1658620-8
34 NOVO MIL 15DP, LEAD FREE



TE Part # 1658623-8
34 NOVO MIL 30DP, LEAD FREE

Customers Also Bought



TE Part # 1-1623728-0
Wirewound Resistor: Vertical Mount

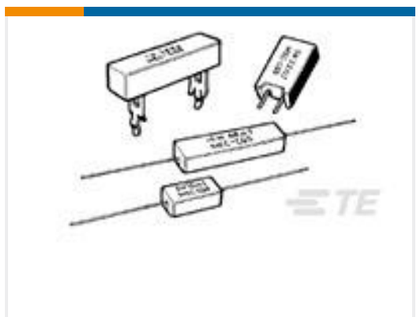

TE Part # 2-1623783-1
SQM7 100K 5% (METAL FILM)

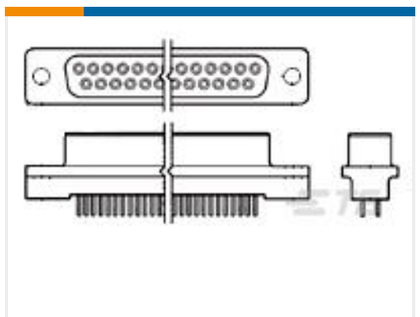

TE Part # 5207841-4
HD-20 RCPT 9P VERT THD INS

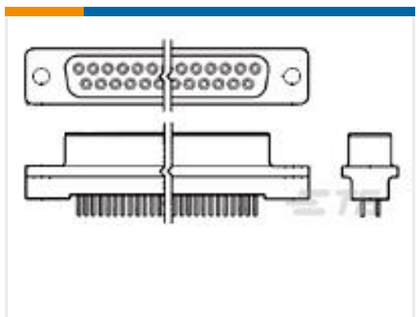

TE Part # 5745057-4
HD-20 RCPT 15P VERT THD INS



TE Part # L9000034-01
Antenna 1/4 Wave Short 2.4GHz SMA



TE Part # 650083N002
D-436-59CS2612

Documents

Product Drawings

IDC LOW PRO HDR 34P VERT SHT L

English

CAD Files

3D PDF

3D

Customer View Model

ENG_CVM_CVM_3-1761608-1_C.2d_dxf.zip

English

Customer View Model

ENG_CVM_CVM_3-1761608-1_C.3d_igs.zip

English

Customer View Model

ENG_CVM_CVM_3-1761608-1_C.3d_stp.zip

English

By downloading the CAD file I accept and agree to the **Terms and Conditions**of use.

Product Specifications

Product Specification

English