BGA Heat Sink (High Aspect Ratio Ext.) Slant Fin



Image above is for illustration purpose only.

ATS Part#: **ATS060060019-MF-16R**

Description: 60.00 x 60.00 x 19.00 mm BGA Heat Sink (High Aspect Ratio Ext.) Slant Fin

Heat Sink Type: Slant Fin

Heat Sink Attachment: N/A

Equivalent Part Number: N/A

Features & Benefits

- Features a low profile, slant fin array that offers many of the performance benefits of **maxiFLOW™** at a great value
- Fabricated from extruded aluminum, which minimizes thermal resistance from the base to the fins, reduces weight and keeps costs low
- Higher performance helps ensure reliable product life at a lower cost than other extruded heat sinks
- Comes standard without interface material or with most common pressure sensitive thermal tapes as a custom option

Thermal Performance

AIR VELOCITY		@200 LFM 1.0 M/S	@300 LFM 1.5 M/S	@400 LFM 2.0 M/S	@500 LFM 2.5 M/S	@600 LFM 3.0 M/S	@700 LFM 3.5 M/S	@800 LFM 4.0 M/S
THERMAL RESISTANCE	Unducted Flow	2.25 °C/W	1.3 °C/W	0.9 °C/W	0.7 °C/W	0.6 °C/W	0.6 °C/W	0.5 °C/W
	Ducted Flow	0.8	0.6	0.5	0.5	0.4	0.4	0.4

Product Detail

Schematic Image	Dimension A	Dimension B	Dimension C	Dimension D	TIM	Finish
	60.00 mm	60.00 mm	19.00 mm	66.02 mm	N/A	BLACK-ANODIZED

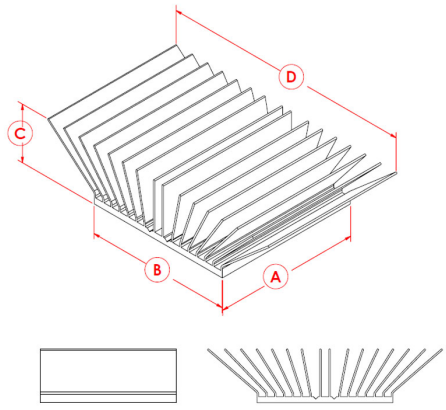

Image above is for illustration purpose only.

Notes:

- Dimension A and B refer to component size.
- Dimension C is the heat sink height from the bottom of the base to the top of the fin field.
- Dimension D is fin tip to fin tip.
- Thermal performance data are provided for reference only. Actual performance may vary by application.
- ATS reserves the right to update or change its products without notice to improve the design or performance.
- ATS certifies that this heat sink assembly is RoHS-6 and REACH compliant.
- Contact ATS to learn about custom options available.

For more information, to find a distributor or to place an order, please contact us at 781-769-2800 (North America), **sales@qats.com** or **www.qats.com**.

© 2013 Advanced Thermal Solutions, Inc. | 89-27 Access Road | Norwood MA | 02062 | USA

ATS ADVANCED THERMAL SOLUTIONS, INC.
Innovations in Thermal Management®

Rev - 040413