PASTERNACK®
THE ENGINEER'S RF SOURCE

BNC Twinax Jack Right Angle Connector Solder Attachment Thru Hole PCB, .687 inch x .500 inch Hole Spacing



RF Connectors Technical Data Sheet PE44116

Configuration

- BNC Twinax Jack Connector
- MIL-STD-348
- 78 Ohms
- Right Angle Body Geometry
- Thru Hole Interface Type
- Solder Attachment

Features

- Silver Plated Contact
- Contact plating according to QQ-S-365

Applications

- General Purpose Test
- PCB Applications

Description

Pasternack's PE44116 78 ohm BNC Twinax jack right angle connector with solder attachment for thru hole PCB (.687 inch x .500 inch hole spacing) is part of our full line of RF components available for same-day shipping. Its right angle body geometry allows for easier connections in tight spaces.

Our 78 ohm BNC Twinax jack right angle connector PE44116 datasheet specifications and drawing with dimensions are shown below in this PDF. Pasternack's broad catalog of RF, microwave and millimeter wave connectors allows designers to configure and customize their signal connections however they like. Whether the need is to provide an I/O for a board design, or simply create a custom cable assembly configuration, Pasternack has the right connector for the job. Pasternack can also expertly build your custom cable assemblies for you and ship same-day.

Mechanical Specifications

Size

Length	1.06 in [26.92 mm]
Width/Dia.	0.688 in [17.48 mm]
Height	0.785 in [19.94 mm]
Weight	0.027 lbs [12.25 g]

Material Specifications

Description	Material	Plating
Contact		Silver QQ-S-365
Insulation	PTFE	
Body	Brass	Nickel QQ-N-290

Click the following link (or enter part number in "SEARCH" on website) to obtain additional part information including price, inventory and certifications: BNC Twinax Jack Right Angle Connector Solder Attachment Thru Hole PCB, .687 inch x .500 inch Hole Spacing PE44116

Pasternack Enterprises, Inc. • P.O. Box 16759, Irvine, CA 92623
Phone: (866) 727-8376 or (949) 261-1920 • **Fax:** (949) 261-7451
Sales@Pasternack.com • Techsupport@Pasternack.com

© 2016 Pasternack Enterprises All Rights Reserved



BNC Twinax Jack Right Angle Connector Solder Attachment Thru Hole PCB, .687 inch x .500 inch Hole Spacing

Compliance Certifications (see product page for current document)

Plotted and Other Data

Notes:

BNC Twinax Jack Right Angle Connector Solder Attachment Thru Hole PCB, .687 inch x .500 inch Hole Spacing from Pasternack Enterprises has same day shipment for domestic and International orders. Our RF, microwave and millimeter wave products maintain a 99% availability and are part of the broadest selection in the industry.

Click the following link (or enter part number in "SEARCH" on website) to obtain additional part information including price, inventory and certifications: BNC Twinax Jack Right Angle Connector Solder Attachment Thru Hole PCB, .687 inch x .500 inch Hole Spacing PE44116

URL: https://www.pasternack.com/bnc-twinax-jack-standard-thru-hole-pcb-connector-pe44116-p.aspx

The information contained in this document is accurate to the best of our knowledge and representative of the part described herein. It may be necessary to make modifications to the part and/or the documentation of the part, in order to implement improvements. Pasternack reserves the right to make such changes as required. Unless otherwise stated, all specifications are nominal. Pasternack does not make any representation or warranty regarding the suitability of the part described herein for any particular purpose, and Pasternack does not assume any liability arising out of the use of any part or documentation.

Pasternack Enterprises, Inc. • P.O. Box 16759, Irvine, CA 92623
Phone: (866) 727-8376 or (949) 261-1920 • **Fax:** (949) 261-7451
Sales@Pasternack.com • Techsupport@Pasternack.com

© 2016 Pasternack Enterprises All Rights Reserved

PE44116 CAD Drawing

BNC Twinax Jack Right Angle Connector Solder Attachment
Thru Hole PCB, .687 inch x .500 inch Hole Spacing

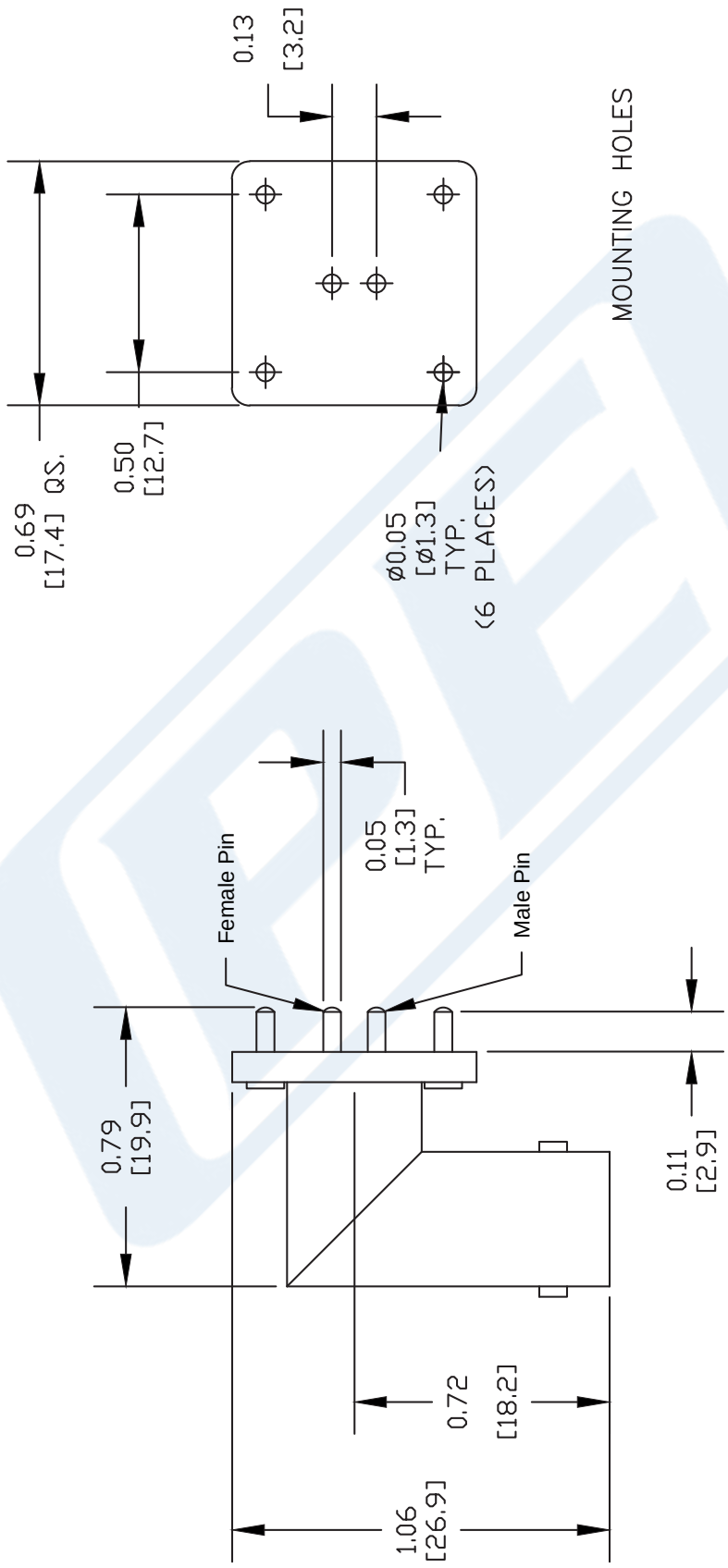

NOTES:
1. UNLESS OTHERWISE SPECIFIED ALL DIMENSIONS ARE NOMINAL.
2. ALL SPECIFICATIONS ARE SUBJECT TO CHANGE WITHOUT NOTICE AT ANY TIME.
3. DIMENSIONS ARE IN INCHES [mm].
4. FITS MIL-C-17 AND EQUIVALENT CABLES.

DWG TITLE	REV. B	FSCM NO. 53919	CAD FILE 062111	SCALE N/A	SIZE A	2231
PE44116						

PASTERNACK®
Pasternack Enterprises, Inc.
P.O. Box 16759 | Irvine | CA | 92623
Phone: (949) 261-1920 | **Fax:** (949) 261-7451
Website: www.pasternack.com | **E-Mail:** sales@pasternack.com

© 2016 Pasternack Enterprises All Rights Reserved