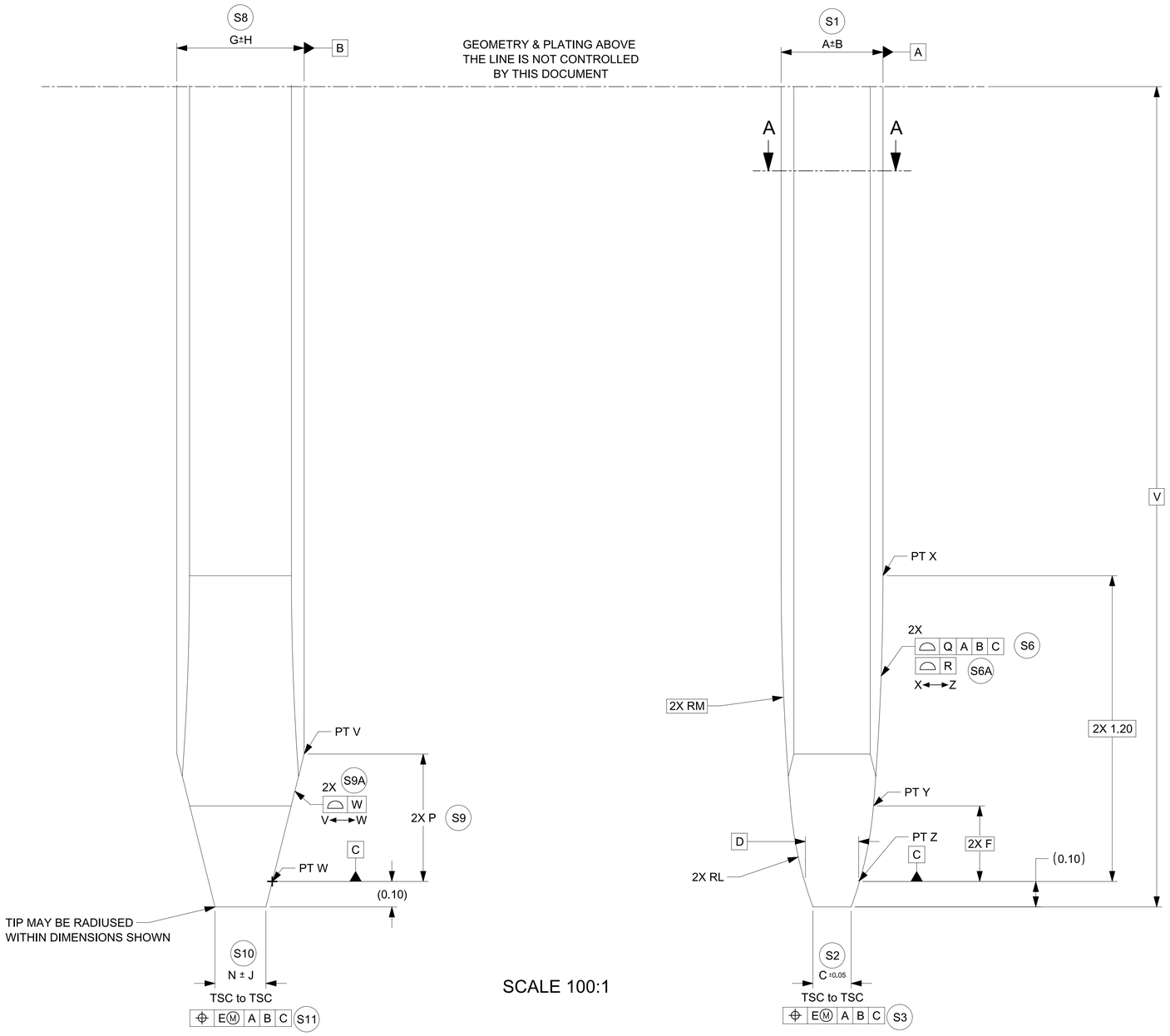

SCALE 100:1

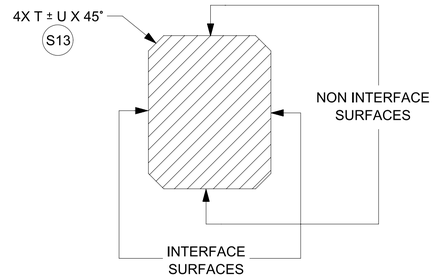

SECTION A-A

TABLE 1			DRAWING DIMENSIONS																		
Model NO.	Description	Application	A	B	C	D	E	F	G	H	J	L	M	N	P	Q	R	T	U	V	W
34735-0004_FM_000	0.50mm BLADE	HEADER	0.40	0.015	0.15	0.216	0.05	0.296	0.50	0.03	0.05	1.5	11	0.20	0.50	0.10	0.06	0.05	0.03	4.0 MIN	0.08
34735-0001_FM_000	0.64mm BLADE NORMAL THICKNESS	HEADER	0.64	0.03	0.25	0.356	0.10	0.285	0.64	0.03	0.05	1	7	0.25	0.55	0.10	0.06	0.05	0.03	5.5 MIN	0.08
34735-0002_FM_000	0.64mm BLADE - REDUCED THICKNESS	HEADER	0.625	0.015	0.234	0.341	0.10	0.285	0.64	0.03	0.05	1	7	0.25	0.55	0.10	0.06	0.05	0.03	5.5 MIN	0.08
34735-0006_FM_000	1.20mm BLADE	HEADER	0.60	0.015	0.21	0.316	0.10	0.285	1.00	0.05	0.05	1	7	0.59	0.55	0.10	0.06	0.05	0.03	5.5 MIN	0.13
34735-0003_FM_000	1.50mm BLADE	HEADER	0.80	0.03	0.25	0.321	0.10	1.10	1.50	0.05	0.10	4.775	1.083	0.5	1.68	0.10	0.06	0.05	0.03	5.0 MIN	0.13
34735-0010_FM_000	2.8mm BLADE	HEADER	0.80	0.025	0.20	0.345	0.10	0.314	2.50	0.10	0.10	1	4	1.80	1.10	0.15	0.06	0.06	0.05	9.5 MIN	0.25
34735-0011_FM_000	6.3mm BLADE	HEADER	0.80	0.025	0.31	0.345	0.10	0.314	6.0	0.25	0.20	1	4	3.90	1.10	0.15	0.06	0.06	0.05	10.5 MIN	0.13
34735-0012_FM_000	1.20mm BLADE	INLINE	0.60	0.015	0.21	0.316	0.10	0.285	1.20	0.05	0.05	1	7	0.59	0.55	0.10	0.06	N/A	N/A	5.5 MIN	0.13

FUNCTIONAL SYMBOLS
FA = 0
FC = 0
FP = 0
DIVISIONAL SYMBOLS

THIS DRAWING CONTAINS INFORMATION THAT IS PROPRIETARY TO MOLEX ELECTRONIC TECHNOLOGIES, LLC AND SHOULD NOT BE USED WITHOUT WRITTEN PERMISSION

DIMENSION UNITS	SCALE
mm	100:1

GENERAL TOLERANCES (UNLESS SPECIFIED)	
ANGULAR TOL	± 0.5 °
4 PLACES	± 0.00000
3 PLACES	± 0.0150
2 PLACES	± 0.050
1 PLACE	± 0.10
0 PLACES	± 0.00

DRAFT WHERE APPLICABLE MUST REMAIN WITHIN DIMENSIONS

CURRENT REV DESC:

PHASE: Design Production
EC NO: CO-000000508
DRWN: Raghavendra MV 2022-01-31
CHK'D: Nathan Song 2022-02-07
APPR: Deepak Patil 2022-02-09

INITIAL REVISION:
DRWN: Raghavendra MV 2022-01-31
APPR: Deepak Patil 2022-02-09

molex

DESIGN STANDARD
HEADER PIN & BLADE TIP GEOMETRY FOR MATING TO HARNESS TERMINALS

PRODUCT SALES DRAWING

DOCUMENT NUMBER	DOC TYPE	DOC PART	REVISION
347350050	PSD	000	A21

THIRD ANGLE PROJECTION | DRAWING: A1-SIZE | SERIES: 34735 | MATERIAL NUMBER | CUSTOMER | SHEET NUMBER: 2 OF 2

NOTES

1. GENERAL:

1.1. ALL PRODUCT SPECIFICATIONS AND THEIR RELATED DOCUMENTS USING THIS FEATURE MUST REFERENCE THIS DOCUMENT AS THE CONTROLLING SPECIFICATION AND USE THE SAME BALLOON NUMBERS.

1.2. COMPLIANCY TO THIS DOCUMENT:
- a) COMPLIANCY MAY BE CLAIMED BY MEETING THE REQUIREMENTS IN THIS SPECIFICATION WITH THE DEVIATION IDENTIFIED AND MAY BE REFERENCED IN OTHER DOCUMENTS (DRAWINGS, DVP&R, ETC.) AS 'CONFORMS TO MOLEX 347350050 REV X.X'.
- b) PRODUCTS DESIGNED AFTER THE DATE OF RELEASE OF THIS DOCUMENT SHALL BE COMPLIANT TO THE CURRENT REVISION OF THIS DOCUMENT.
- c) PRODUCTS THAT HAVE MET PREVIOUS REVISION(S) OF THIS DOCUMENT SPECIFICATION SHALL STILL BE CONSIDERED 'MOLEX STANDARDS COMPLIANT' TO THOSE REVISIONS AND DO NOT NEED TO BE RE-VALIDATED.

1.3. DEVIATIONS TO THIS DOCUMENT ARE ALLOWABLE UNDER THE FOLLOWING CONDITIONS:
- a) ALL DEVIATIONS SHALL SHOW EQUAL OR BETTER PERFORMANCE (ELECTRICAL/MECHANICAL) AS REQUIRED BY VALIDATION SPECIFICATION.
- b) EXCEPTIONS ARE CLEARLY IDENTIFIED ON THE PRODUCT SPECIFICATION.
- c) ALL DEVIATIONS ARE APPROVED BY THE FOLLOWING INDIVIDUALS:
  - PERSON WHO HAS INTERFACE RESPONSIBILITY
  - PERSON WITH DESIGN STANDARD APPROVER AUTHORITY
- d) ALL RECORDS OF DEVIATION APPROVALS SHALL BE INCLUDED WITH CHANGE NOTICE DOCUMENTATION.

2. DESIGN - MATERIALS:

2.1. BASE MATERIAL TYPE : COPPER ALLOY

3. DESIGN - GEOMETRY:

3.1. THE 3-D CAD DATA IS BASIC (WITHOUT TOLERANCE) AND MASTER FOR THIS PART WITH EXCEPTION TO UNDERLINED DIMENSIONS. DIMENSIONAL INFORMATION NOT SHOWN ON THIS DRAWING IS DEFINED BY THE DATA FILE AT ITS LATEST REVISION.

3.2. PRODUCT DESIGN MODEL NUMBER(S): SEE BOM TABLE

3.3. GEOMETRIC DIMENSIONS AND TOLERANCES PER ASME Y14.5-2009

3.4. EDGES OF UNDEFINED SHAPE PER ISO 13715.

3.5. DIMENSIONS AND TOLERANCES APPLY BEFORE AND AFTER PLATING.

3.6. GENERAL TOLERANCES: SEE TITLE BLOCK

4. DESIGN - MANUFACTURING:

4.1. ANY REMAINING PROCESS LUBRICANT MUST NOT VARNISH OR DEGRADE ELECTRICAL PERFORMANCE. PROCESS LUBRICANTS SHOULD BE APPROVED BY THE RESPONSIBLE ENGINEER.

4.2. ALLOWABLE BURR: 0.03mm MAX UNLESS OTHERWISE SPECIFIED

4.3. FOR UNPLATES BLADES - TOOLING MARKS SPANNING ACROSS OR ALONG THE INTERFACING PROFILE OF THE BLADE SHOULD BE FURTHER INSPECTED. A TOOLING MARK DEEPER THAN 1 MICRON SHOULD NOT BE ACCEPTED.

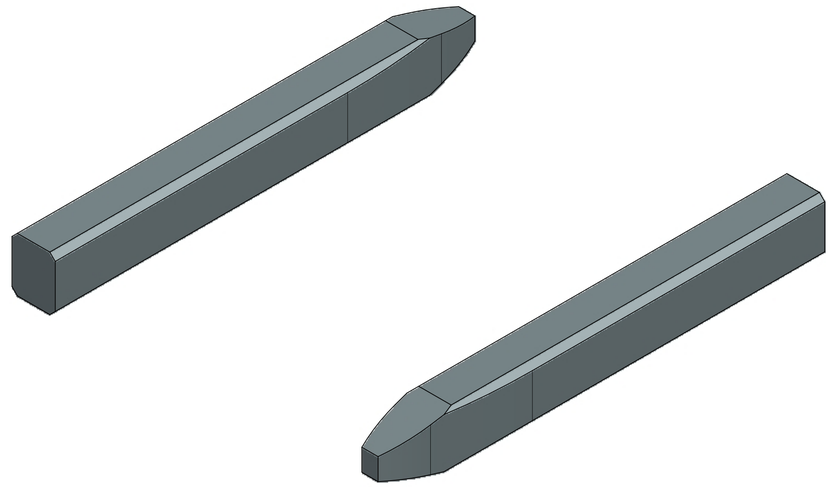

SCALE 50:1

0.5 MM PIN VIEW SHOWN FOR REPRESENTATION PURPOSES ONLY

THIS DRAWING CONTAINS INFORMATION THAT IS PROPRIETARY TO MOLEX ELECTRONIC TECHNOLOGIES, LLC AND SHOULD NOT BE USED WITHOUT WRITTEN PERMISSION

FUNCTIONAL SYMBOLS			
EA = 0	DIMENSION UNITS	SCALE	
	mm	50:1	
EC = 0	GENERAL TOLERANCES (UNLESS SPECIFIED)		
	ANGULAR TOL	± 0.5 °	
EP = 0	4 PLACES	± 0.00000	
DIVISIONAL SYMBOLS	3 PLACES	± 0.0150	
	2 PLACES	± 0.050	
	1 PLACE	± 0.10	
	0 PLACES	± 0.00	
	DRAFT WHERE APPLICABLE MUST REMAIN WITHIN DIMENSIONS		

CURRENT REV DESC:

PHASE: Design Production
EC NO: CO-000000508
DRWN: Raghavendra MV 2022-01-31
CHK'D: Nathan Song 2022-02-07
APPR: Deepak Patil 2022-02-09

INITIAL REVISION:
DRWN: Raghavendra MV 2022-01-31
APPR: Deepak Patil 2022-02-09

THIRD ANGLE PROJECTION | DRAWING: A1-SIZE | SERIES: 34735

molex

DESIGN STANDARD
HEADER PIN & BLADE TIP GEOMETRY FOR MATING TO HARNESS TERMINALS

PRODUCT SALES DRAWING

DOCUMENT NUMBER	DOC TYPE	DOC PART	REVISION
347350050	PSD	000	A21

MATERIAL NUMBER | CUSTOMER | SHEET NUMBER: 1 OF 2

TABLE OF CONTENTS	
SHEET NO.	SHEET DESCRIPTION
1	NOTES AND PART NUMBER CHART
2	KEY CONFIGURATIONS
3	RECEPTACLE CONNECTOR ASSEMBLY

NOTES: VALID UNLESS OTHERWISE SPECIFIED

1. GENERAL:
   a. APPLICATION SPECIFICATION SEE: AS-34894-0001
      -CONTAINS: PRODUCT INTRODUCTION, PRODUCT SUMMARY, CONNECTOR ASSEMBLY, PACKAGING INFORMATION, CONNECTOR MATING, SERVICE INSTRUCTIONS, ELECTRICAL CONTINUITY CHECKING, CRIMPING, AND TROUBLESHOOTING.
   b. PRODUCT SPECIFICATION SEE: 349670001 PS
      -CONTAINS: PRODUCT INTRODUCTION, PRODUCT SUMMARY, RATINGS (CURRENT, TEMPERATURE, SEALING, AND FLAMMABILITY), AND PRODUCT VALIDATION.
   c. FOR TERMINALS TO BE USED WITH THIS ASSEMBLY SEE MOLEX DRAWING 349050400 PSD.
   d. DESIGNED TO MATE WITH DEVICE INTERFACE AS SPECIFIED IN PART NUMBER AND INTERFACE CHART. SEE MOLEX DRAWING 348950800 PSD FOR INTERFACE SPECIFICATION.
   e. ASSEMBLY SHIPPED WITH ISL IN PRE-LOCK POSITION (SEE ISL PRE-LOCK VIEW SHEET 3).
   f. PACKAGING SPECIFICATION PER MOLEX DRAWING: 348945000 PDD
   g. PARTS MUST BE IN COMPLIANCE TO MOLEX CHEMICAL SUBSTANCES FOR PRODUCTS AND PACKAGING SPECIFICATION: 2014040014
   h. DATA MUST BE SUBMITTED UNDER THE MOLEX PART NUMBER TO IMDS (COMPANY ID#13255)

2. DESIGN - MATERIALS:

CONNECTOR HOUSING:	NYLON GF35, BLACK
TERMINAL HOUSING:	NYLON GF35, BLACK
COVER:	NYLON GF35, COLOR SEE PART NUMBER CHART
ISL:	SPS GF30, NATURAL
CPA:	PBT GF30, RED
MAT SEAL:	INHERENTLY LUBRICATED SILICONE
RING SEAL:	INHERENTLY LUBRICATED SILICONE

3. DESIGN - GEOMETRY:
   a. ALL GRAPHIC DATA IS BASIC (NO TOLERANCE) AND MUST BE TAKEN FROM THE DATA FILE AT ITS LATEST REVISION.
   b. GEOMETRIC DIMENSIONS AND TOLERANCES PER ASME Y14.5-2009
   c. EDGES AND UNDIMENSIONED DETAILS PER ISO13715
   d. CORNERS SHOWN AS SHARP TO BE R 0.2 MAX.
   e. LETTERING SHALL BE 0.15 MAX RAISED IN 0.25 MAX RECESS PAD. THIS INCLUDES RECYCLING CODE, CAVITY ID, VENDOR IDENTIFICATION, AND CUSTOMER MATERIAL NUMBER.
   f. VISUAL DEFECTS SHALL MEET COSMETIC STANDARD PS-45499-002 (Class B).
   g. PARTS ARE LASER MARKED WITH PART NUMBER AND DATE CODE.

PART NUMBER AND MATING INTERFACE CHART

CIRCUIT SIZE	PART NUMBER	KEY	COVER COLOR	CPA INCLUDED	INTERFACE MODEL NUMBER
2X4	34894-4001	A	BLACK	YES	348954805
	34894-4002	B	LIGHT GRAY	YES	348954806
	34894-4003	C	DARK GRAY	YES	348954807
	34894-4004	D	STONE GRAY	YES	348954808
	34894-4009	A	BLACK	NO	348954805
	34894-4010	B	LIGHT GRAY	NO	348954806
	34894-4011	C	DARK GRAY	NO	348954807
	34894-4012	D	STONE GRAY	NO	348954808
2X8	34894-8001	A	BLACK	YES	348958801
	34894-8002	B	LIGHT GRAY	YES	348958802
	34894-8003	C	DARK GRAY	YES	348958803
	34894-8004	D	STONE GRAY	YES	348958804
	34894-8009	A	BLACK	NO	348958801
	34894-8010	B	LIGHT GRAY	NO	348958802
	34894-8011	C	DARK GRAY	NO	348958803
	34894-8012	D	STONE GRAY	NO	348958804

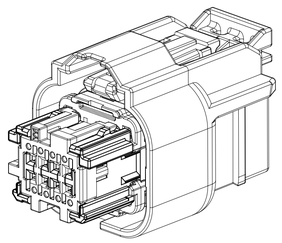

2X4

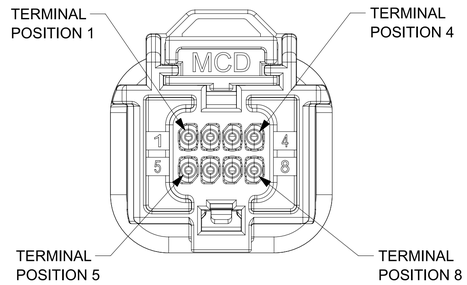

2X4

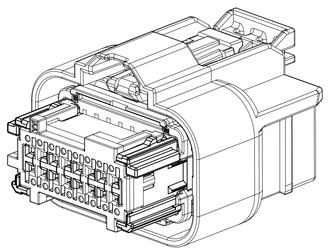

2X8

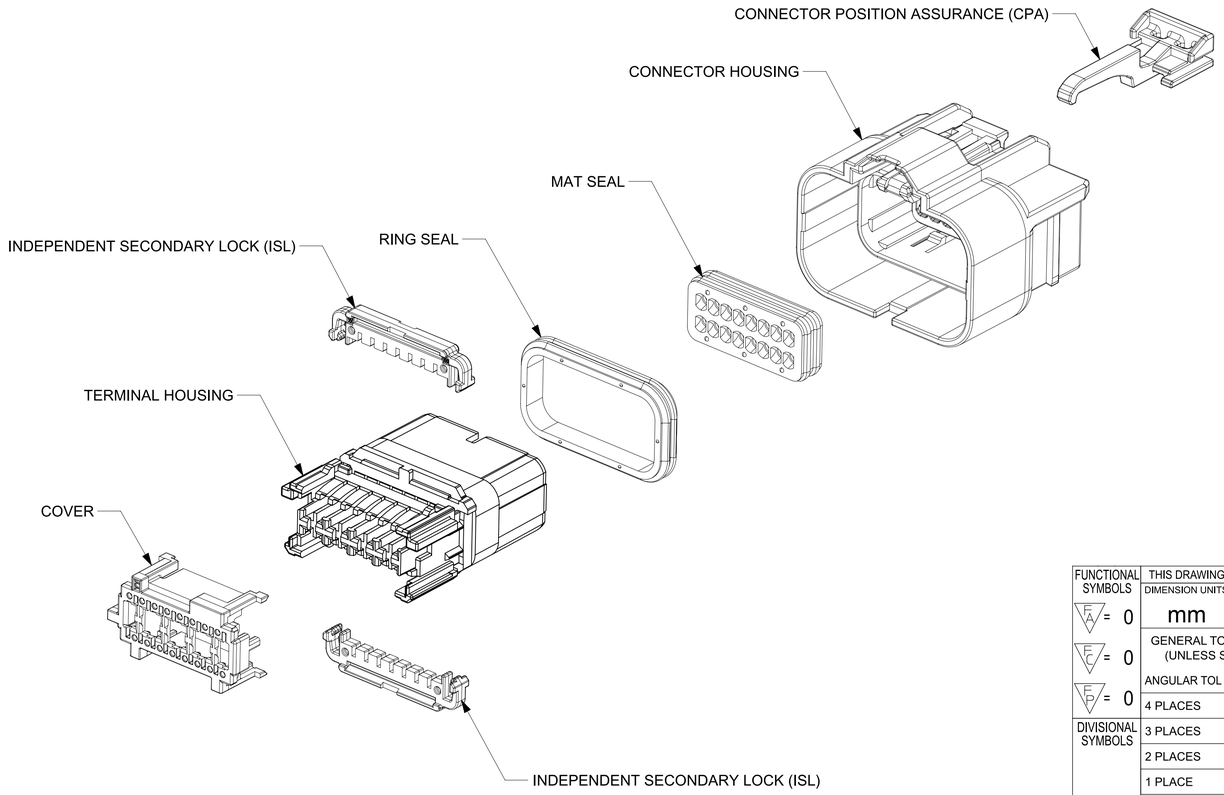

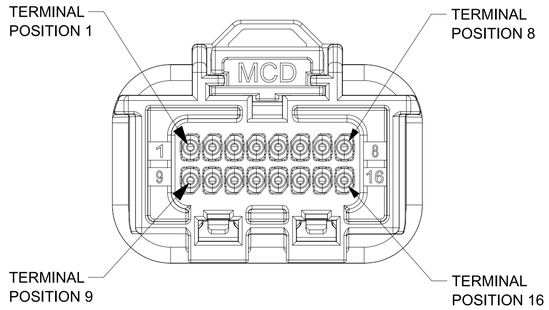

2X8

THIS DRAWING CONTAINS INFORMATION THAT IS PROPRIETARY TO MOLEX ELECTRONIC TECHNOLOGIES, LLC AND SHOULD NOT BE USED WITHOUT WRITTEN PERMISSION

FUNCTIONAL SYMBOLS	DIMENSION UNITS	SCALE
FA = 0	mm	3:1
FC = 0	GENERAL TOLERANCES (UNLESS SPECIFIED)	
FP = 0	ANGULAR TOL	± 0.5°
DIVISIONAL SYMBOLS	4 PLACES	±
	3 PLACES	±
	2 PLACES	±
	1 PLACE	±
	0 PLACES	±
	DRAFT WHERE APPLICABLE MUST REMAIN WITHIN DIMENSIONS	

CURRENT REV DESC: UPDATED 2X4 INTERFACE MODEL NUMBERS

PHASE: Design Production
CO NO: CO-000001789
DRWN: Michael Li 2022-11-29
CHK'D: Michael Li 2022-12-02
APPR: Mike Vanslambrouck 2022-12-15

INITIAL REVISION:
DRWN: KBORUSZEWSKI
APPR:

molex

MINI50 SEALED RECEPTACLE ASSEMBLY
DUAL ROW

PRODUCT SALES DRAWING

THIRD ANGLE PROJECTION	DRAWING	SERIES	MATERIAL NUMBER	CUSTOMER	SHEET NUMBER
	A1-SIZE	34894	SEE CHART		1 OF 3

DOCUMENT NUMBER	DOC TYPE	DOC PART	REVISION
348940001	PSD	000	A6

SHEET DESCRIPTION
KEY CONFIGURATIONS

2X4

KEY A

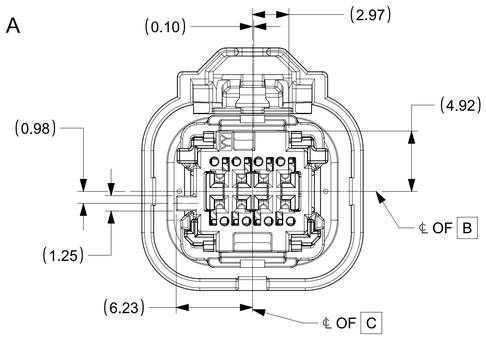

KEY B

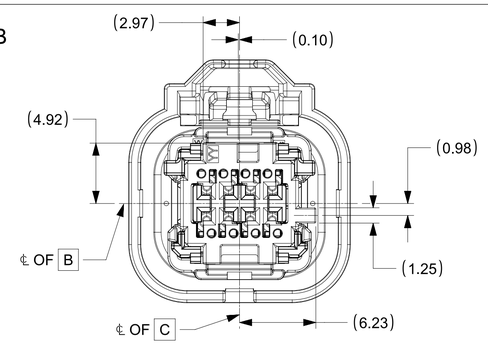

KEY C

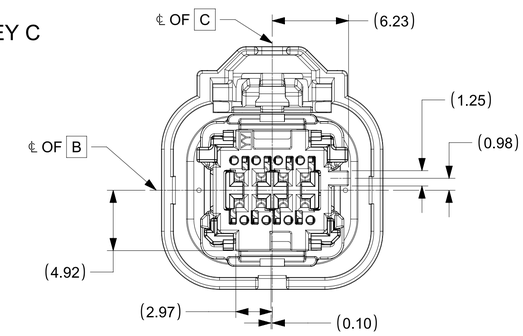

KEY D

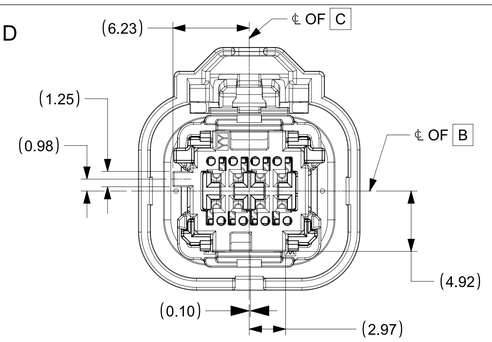

2X8

KEY A

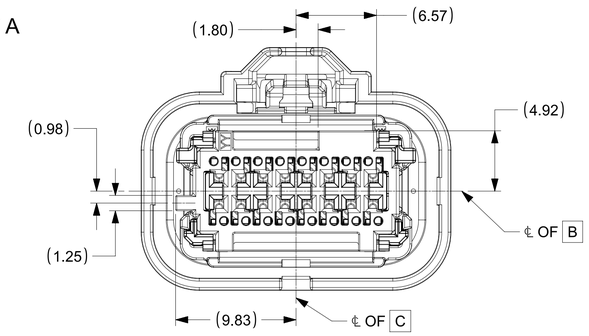

KEY B

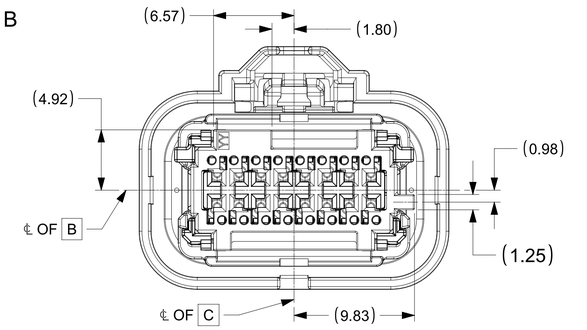

KEY C

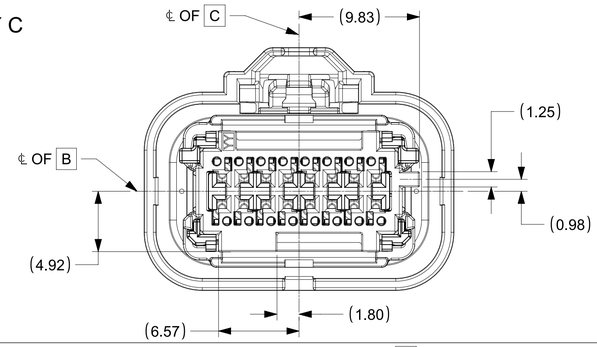

KEY D

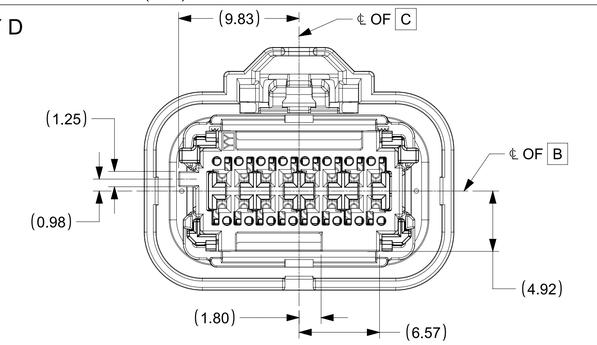

FUNCTIONAL SYMBOLS	
F/A	= 0
F/C	= 0
F/P	= 0
DIVISIONAL SYMBOLS	

THIS DRAWING CONTAINS INFORMATION THAT IS PROPRIETARY TO MOLEX ELECTRONIC TECHNOLOGIES, LLC AND SHOULD NOT BE USED WITHOUT WRITTEN PERMISSION

DIMENSION UNITS	SCALE
mm	4:1

GENERAL TOLERANCES (UNLESS SPECIFIED)	
ANGULAR TOL	± 0.5°
4 PLACES	±
3 PLACES	±
2 PLACES	±
1 PLACE	±
0 PLACES	±

DRAFT WHERE APPLICABLE MUST REMAIN WITHIN DIMENSIONS

CURRENT REV DESC: UPDATED 2X4 INTERFACE MODEL NUMBERS

PHASE:	Design Production	
CO NO:	CO-000001789	
DRWN:	Michael Li	2022-11-29
CHK'D:	Michael Li	2022-12-02
APPR:	Mike Vanslambrouck	2022-12-15

INITIAL REVISION:
DRWN: KBORUSZEWSKI
APPR:

molex

MINI50 SEALED RECEPTACLE ASSEMBLY
DUAL ROW

PRODUCT SALES DRAWING

THIRD ANGLE PROJECTION	DRAWING	SERIES	MATERIAL NUMBER	CUSTOMER	SHEET NUMBER
	A1-SIZE	34894	SEE CHART		2 OF 3

DOCUMENT NUMBER	DOC TYPE	DOC PART	REVISION
348940001	PSD	000	A6

SHEET DESCRIPTION
RECEPTACLE CONNECTOR ASSEMBLY

DESCRIPTION	CHARTED DIMENSION				
	DIMENSIONS				
	A	B	C	D	E
2X4	22.82	12.30	2.70	9.40	18.10
2X8	27.66	19.50	6.30	13.00	25.30

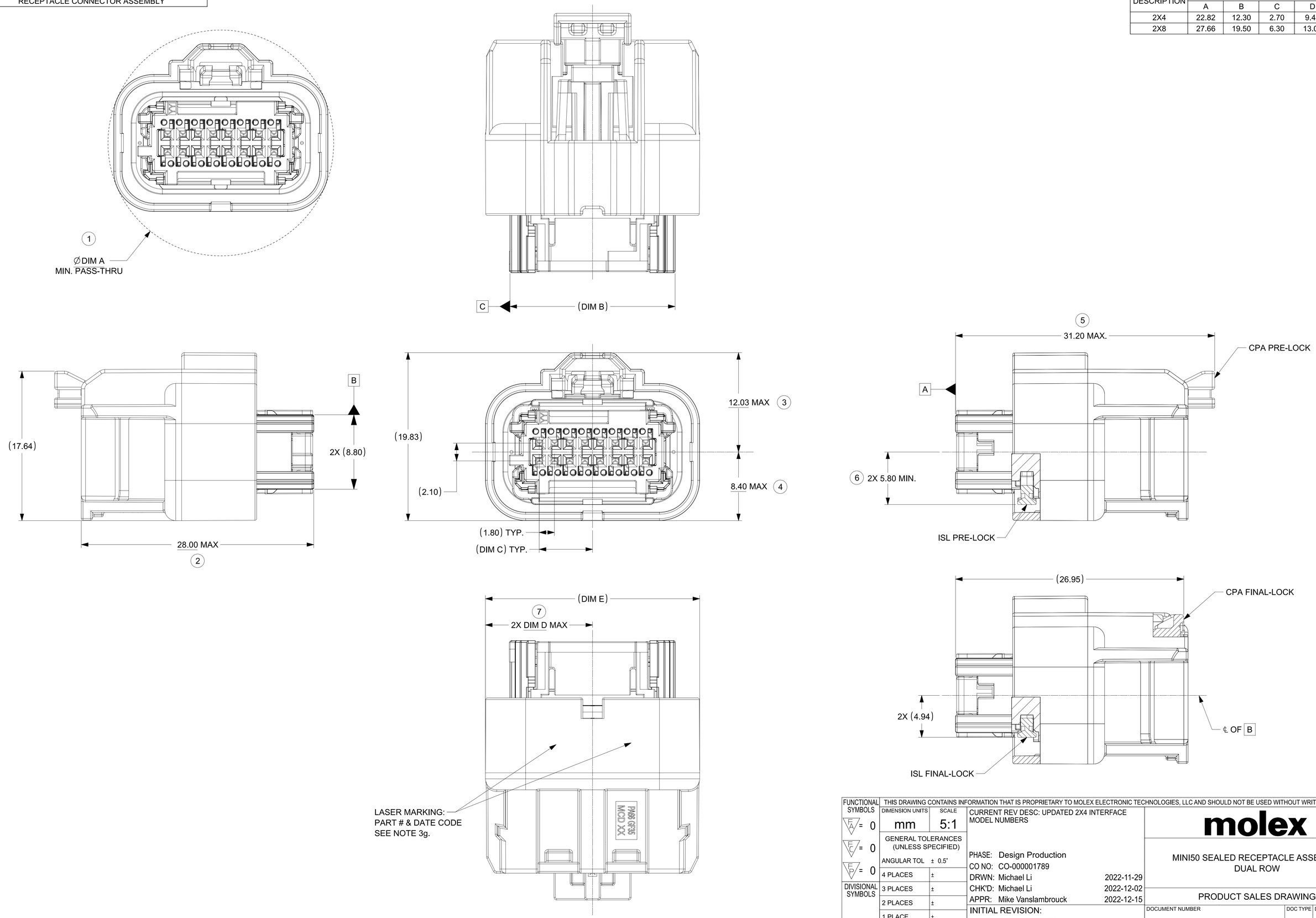

FUNCTIONAL SYMBOLS	THIS DRAWING CONTAINS INFORMATION THAT IS PROPRIETARY TO MOLEX ELECTRONIC TECHNOLOGIES, LLC AND SHOULD NOT BE USED WITHOUT WRITTEN PERMISSION			
FA = 0	DIMENSION UNITS: mm	SCALE: 5:1	CURRENT REV DESC: UPDATED 2X4 INTERFACE MODEL NUMBERS	molex
FC = 0	GENERAL TOLERANCES (UNLESS SPECIFIED)			MINI50 SEALED RECEPTACLE ASSEMBLY DUAL ROW
FP = 0	ANGULAR TOL ± 0.5°		PHASE: Design Production	
	4 PLACES ±		CO NO: CO-000001789	
DIVISIONAL SYMBOLS	3 PLACES ±		DRWN: Michael Li 2022-11-29	
	2 PLACES ±		CHK'D: Michael Li 2022-12-02	PRODUCT SALES DRAWING
	1 PLACE ±		APPR: Mike Vanslambrouck 2022-12-15	
	0 PLACES ±		INITIAL REVISION: DRWN: KBORUSZEWSKI APPR:	DOCUMENT NUMBER: 348940001 / DOC TYPE: PSD / DOC PART: 000 / REVISION: A6
	DRAFT WHERE APPLICABLE MUST REMAIN WITHIN DIMENSIONS	THIRD ANGLE PROJECTION	DRAWING: A1-SIZE / SERIES: 34894	MATERIAL NUMBER: SEE CHART / CUSTOMER: / SHEET NUMBER: 3 OF 3

FORMAT TC-dwg-sub-A1
REVISION: A
DATE: 2021/06/10

molex

MINI50 SEALED 2x8 RECEPTACLE CONNECTOR

BOM AND PIN OUT SHEET

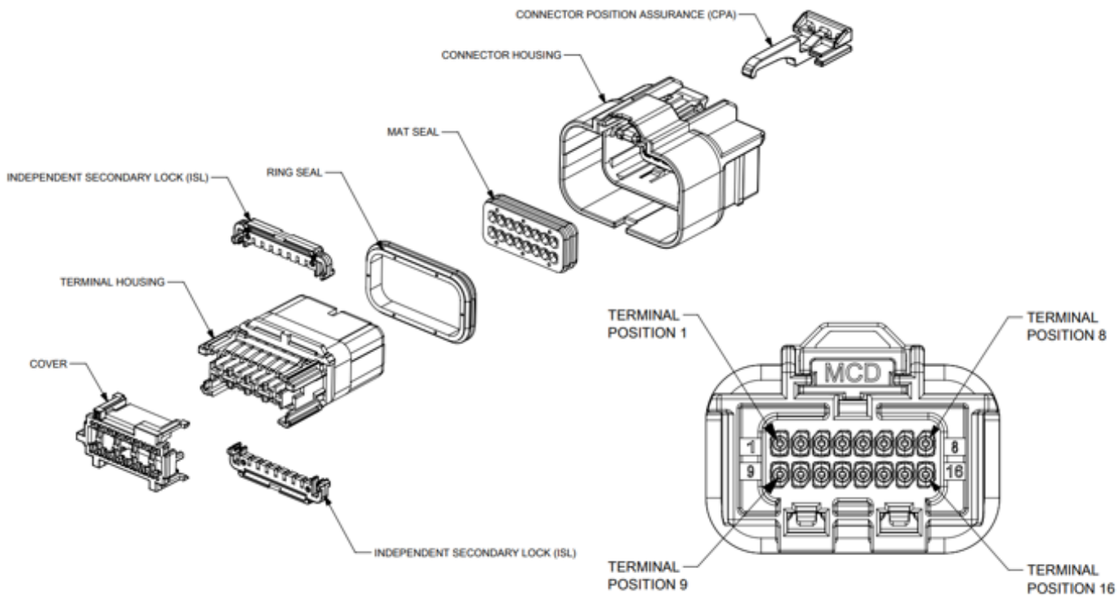

ABBREVIATION	DESCRIPTION	COLOR	MATERIAL
A-BLACK	COVER KEYING OPTION A	BLACK	NYLON GF35
B-LIGHT GRAY	COVER KEYING OPTION B	LIGHT GRAY	NYLON GF35
C-DARK GRAY	COVER KEYING OPTION C	DARK GRAY	NYLON GF35
D-STONE GRAY	COVER KEYING OPTION D	STONE GRAY	NYLON GF35
C-HSG-P	CONNECTOR HOUSING PLUGGED	BLACK	NYLON GF35
C-HSG-O	CONNECTOR HOUSING OPEN	BLACK	NYLON GF35
T-HSG	TERMINAL HOUSING	BLACK	NYLON GF35
ISL	INDEPENDENT SECONDARY LOCK	NATURAL	SPS
CPA	CONNECTOR POSITION ASSURANCE	RED	PBT GF 30
M	MAT SEAL	RUST RED	INHERENTLY LUBRICATED SILICONE
R	RING SEAL	RUST RED	INHERENTLY LUBRICATED SILICONE

FOR ADDITIONAL INFORMATION SEE 348940001 **PSD 000**

ASSEMBLY DESCRIPTION	ASSEMBLY PART NUMBER	COMPONENT							BLOCKED TERMINALS																STATUS	COMMENTS	OPTIONAL ATTATCHMENTS SOLD SEPERATELY
		THE PRESENCE OF AN ABBREVIATION INDICATES THE PRESENCE OF THAT COMPONENT							CAVITY WITH A NUMBER INDICATES BLOCKED TERMINAL POSITION CAVITY WITHOUT A NUMBER INDICATES OPEN TERMINAL POSITION																		BLACKSHELL P/N
		COVER KEY/ COLOR	CONNECTOR HOUSING	TERMINAL HOUSING	ISL (2X)	CPA	MAT SEAL	RING SEAL																			
MINI50 SEALED 2X8 RCPT CON KEY A CPA/16	348948001	A-BLACK	C-HSG-O	T-HSG	ISL	YES	M	R	-	-	-	-	-	-	-	-	-	-	-	-	-	-	-	-	SALEABLE		
MINI50 SEALED 2X8 RCPT CON KEY B CPA/16	348948002	B-LIGHT GRAY	C-HSG-O	T-HSG	ISL	YES	M	R	-	-	-	-	-	-	-	-	-	-	-	-	-	-	-	-	SALEABLE		
MINI50 SEALED 2X8 RCPT CON KEY C CPA/16	348948003	C-DARK GRAY	C-HSG-O	T-HSG	ISL	YES	M	R	-	-	-	-	-	-	-	-	-	-	-	-	-	-	-	-	SALEABLE		
MINI50 SEALED 2X8 RCPT CON KEY D CPA/16	348948004	D-STONE GRAY	C-HSG-O	T-HSG	ISL	YES	M	R	-	-	-	-	-	-	-	-	-	-	-	-	-	-	-	-	SALEABLE		
MINI50 SEALED 2X8 RCPT CON KEY A CPA/0	348948005	A-BLACK	C-HSG-P	T-HSG	ISL	YES	M	R	1	2	3	4	5	6	7	8	9	10	11	12	13	14	15	16	SALEABLE		
MINI50 SEALED 2X8 RCPT CON KEY B CPA/0	348948006	B-LIGHT GRAY	C-HSG-P	T-HSG	ISL	YES	M	R	1	2	3	4	5	6	7	8	9	10	11	12	13	14	15	16	SALEABLE		
MINI50 SEALED 2X8 RCPT CON KEY C CPA/0	348948007	C-DARK GRAY	C-HSG-P	T-HSG	ISL	YES	M	R	1	2	3	4	5	6	7	8	9	10	11	12	13	14	15	16	SALEABLE		
MINI50 SEALED 2X8 RCPT CON KEY D CPA/0	348948008	D-STONE GRAY	C-HSG-P	T-HSG	ISL	YES	M	R	1	2	3	4	5	6	7	8	9	10	11	12	13	14	15	16	SALEABLE		
MINI50 SEALED 2X8 RCPT CON KEY A/16	348948009	A-BLACK	C-HSG-O	T-HSG	ISL	NO	M	R	-	-	-	-	-	-	-	-	-	-	-	-	-	-	-	-	SALEABLE		
MINI50 SEALED 2X8 RCPT CON KEY B/16	348948010	B-LIGHT GRAY	C-HSG-O	T-HSG	ISL	NO	M	R	-	-	-	-	-	-	-	-	-	-	-	-	-	-	-	-	SALEABLE		

molex

MINI50 SEALED 2x8 RECEPTACLE CONNECTOR

BOM AND PIN OUT SHEET

ASSEMBLY DESCRIPTION	ASSEMBLY PART NUMBER	COMPONENT							BLOCKED TERMINALS																STATUS	COMMENTS	OPTIONAL ATTATCHMENTS SOLD SEPERATELY
		THE PRESENCE OF AN ABBREVIATION INDICATES THE PRESENCE OF THAT COMPONENT							CAVITY WITH A NUMBER INDICATES BLOCKED TERMINAL POSITION CAVITY WITHOUT A NUMBER INDICATES OPEN TERMINAL POSITION																		BLACKSHELL P/N
		COVER KEY/ COLOR	CONNECTOR HOUSING	TERMINAL HOUSING	ISL (2X)	CPA	MAT SEAL	RING SEAL																			
MINI50 SEALED 2X8 RCPT CON KEY C/16	348948011	C-DARK GRAY	C-HSG-O	T-HSG	ISL	NO	M	R	-	-	-	-	-	-	-	-	-	-	-	-	-	-	-	-	SALEABLE		
MINI50 SEALED 2X8 RCPT CON KEY D/16	348948012	D-STONE GRAY	C-HSG-O	T-HSG	ISL	NO	M	R	-	-	-	-	-	-	-	-	-	-	-	-	-	-	-	-	SALEABLE		
MINI50 SEALED 2X8 RCPT CON KEY A/0	348948013	A-BLACK	C-HSG-P	T-HSG	ISL	NO	M	R	1	2	3	4	5	6	7	8	9	10	11	12	13	14	15	16	SALEABLE		
MINI50 SEALED 2X8 RCPT CON KEY B/0	348948014	B-LIGHT GRAY	C-HSG-P	T-HSG	ISL	NO	M	R	1	2	3	4	5	6	7	8	9	10	11	12	13	14	15	16	SALEABLE		
MINI50 SEALED 2X8 RCPT CON KEY C/0	348948015	C-DARK GRAY	C-HSG-P	T-HSG	ISL	NO	M	R	1	2	3	4	5	6	7	8	9	10	11	12	13	14	15	16	SALEABLE		
MINI50 SEALED 2X8 RCPT CON KEY D/0	348948016	D-STONE GRAY	C-HSG-P	T-HSG	ISL	NO	M	R	1	2	3	4	5	6	7	8	9	10	11	12	13	14	15	16	SALEABLE		
MINI50 SEALED 2X8 RCPT CON KEY A CPA/8	348948017	A-BLACK	C-HSG-P	T-HSG	ISL	YES	M	R	1	-	3	-	5	-	7	-	-	10	-	12	-	14	-	16	SALEABLE		
MINI50 SEALED 2X8 RCPT CON KEY A CPA/8	348948018	A-BLACK	C-HSG-P	T-HSG	ISL	YES	M	R	-	2	-	4	-	6	-	8	9	-	11	-	13	-	15	-	SALEABLE		
MINI50 SEALED 2X8 RCPT CON KEY A CPA/14	348948019	A-BLACK	C-HSG-P	T-HSG	ISL	YES	M	R	-	-	-	-	-	-	-	8	-	-	-	-	-	-	-	16	SALEABLE		
MINI50 SEALED 2X8 RCPT CON KEY A CPA/12	348948020	A-BLACK	C-HSG-P	T-HSG	ISL	YES	M	R	1	-	-	-	-	-	-	8	9	-	-	-	-	-	-	16	SALEABLE		
MINI50 SEALED 2X8 RCPT CON KEY A/11	348948021	A-BLACK	C-HSG-P	T-HSG	ISL	NO	M	R	-	2	-	-	-	-	-	8	-	10	11	12	-	-	-	-	SALEABLE		
MINI50 SEALED 2X8 RCPT CON KEY A/13	348948022	A-BLACK	C-HSG-P	T-HSG	ISL	NO	M	R	-	-	3	-	-	-	7	8	-	-	-	-	-	-	-	-	SALEABLE		

TABLE OF CONTENTS	
SHEET NO.	SHEET DESCRIPTION
1	NOTES AND BOM
2	TERMINAL CONFIGURATIONS
3	KEY CONFIGURATIONS
4	INTERFACE DEFINITION
5	INTERFERENCE RIBS DEFINITION (FOR 2X4 ONLY)
6	DATUM TARGETS

MATING INTERFACE CHART			
CIRCUIT SIZE	KEY	MODEL NUMBER	MATING CONNECTOR COVER COLOR
2X4	A	348954805	BLACK
	B	348954806	LIGHT GRAY
	C	348954807	DARK GRAY
	D	348954808	STONE GRAY
2X8	A	348958801	BLACK
	B	348958802	LIGHT GRAY
	C	348958803	DARK GRAY
	D	348958804	STONE GRAY

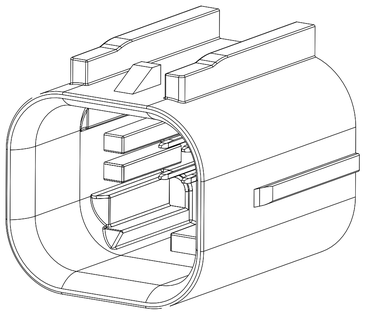

2X4

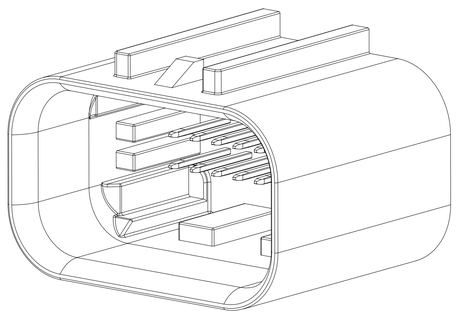

2X8

NOTES: VALID UNLESS OTHERWISE SPECIFIED

1. GENERAL:

REFER TO "SAE/USCAR 12 CONNECTOR GUIDELINES" AND "SAE/USCAR 2 PERFORMANCE SPECIFICATION FOR AUTOMOTIVE ELECTRICAL CONNECTOR SYSTEMS" FOR ADDITIONAL REQUIREMENTS.

2. DESIGN - MATERIALS:

a. HOUSING: SPS/NYLON 20% GLASS FILLED OR EQUIVALENT
FLAMMABILITY REQUIREMENT: PER ISO3795 OR GMW3191
1. BURN RATE 100mm/MIN MAXIMUM
2. MATERIAL MUST BE SELF EXTINGUISHING

b. BLADE TERMINAL: SEE MOLEX SALES DRAWING 347350050. FOR MATERIAL, DIMENSIONAL, PLATING AND COATING REQUIREMENTS AND ANY BLADE TERMINAL DESIGN INFORMATION NOT SHOWN ON REFERENCED OR THIS DRAWING SEE EWCAP DWG NO. EWCAP-001.
1. TIN PLATING: 2.5-4.0 MICROMETERS MATTE TIN OVER 1.25-2.25 MICROMETERS DUCTILE SULFAMATE NICKEL
2. SILVER PLATING: 1.9-3.3 MICROMETERS SILVER OVER 1.0-1.8 MICROMETERS DUCTILE SULFAMATE NICKEL.
ANTI-TARNISH: SYNTHETIC HYDROCARBON CONTACT SURFACE FINISH OR EQUIVALENT APPLIED WITHOUT VOID TO CONTACT AREA

c. STANDARD COLORS FOR KEYING (SEE CHART). DEVIATION REQUIRES APPROVAL OF AUTHORIZED PERSON.

3. DESIGN - GEOMETRY:

a. THE 3-D CAD DATA IS BASIC (WITHOUT TOLERANCE) AND THE MASTER FOR THIS PART WITH THE EXCEPTION OF UNDERLINED DIMENSIONS. DIMENSIONAL INFORMATION NOT SHOWN IN THIS DRAWING IS DEFINED BY THE DATA FILE AT ITS LATEST REVISION.
b. PRODUCT DESIGN MODEL NUMBER(S): SEE MATING INTERFACE CHART
c. GEOMETRIC DIMENSIONS AND TOLERANCES PER ASME Y14.5-2009
d. GENERAL TOLERANCES: SEE TITLE BLOCK
e. EDGES AND UNDIMENSIONED DETAILS PER ISO13715
f. CORNERS SHOWN AS SHARP TO BE R0.2 MAX.
g. LETTERING SHALL BE 0.15 MAX RAISED IN 0.25 MAX RECESS PAD.
THIS INCLUDES RECYCLING CODE, CAVITY ID, VENDOR IDENTIFICATION, AND CUSTOMER MATERIAL NUMBER.
(FOR SMALL PARTS: LETTERING SHALL BE 0.10 MAX RAISED IN 0.15 MAX RECESS PAD)

4. DESIGN - MANUFACTURING:

a. ALLOWABLE FLASH MAX 0.20 HIGH BY MAX 0.13 THICK.
b. ALLOWABLE SPLIT/PARTING LINE MISMATCH 0.2 MAX.
c. EJECTOR PIN MARKS TO BE FLUSH TO 0.25 MAX DEPRESSED. LOCATION MUST BE APPROVED BY PRODUCT ENGINEERING. EJECTOR PIN MARKS NOT PERMISSIBLE ON OR NEAR DATUM TARGET AREA.
d. ALLOWABLE GATE VESTIGE FLUSH TO 0.25 MAX RECESS. LOCATION MUST BE APPROVED BY PRODUCT ENGINEERING.
e. NO EXTERNAL MOLD RELEASE AGENT ALLOWED DURING MANUFACTURING.
f. NO PARTING LINES, MISMATCHES OR EJECTOR MARKS PERMISSIBLE WITHIN THE INDICATED SURFACE. TOOLING FOR INDICATED SURFACE MUST BE PROCESSED TO A SURFACE FINISH OF NTMA #70 (400 PAPER).
g. BLADE TERMINAL ENVIRONMENTAL BARRIER (USED WITH SILVER PLATED TERMINALS) SHALL NOT BE PRESENT ON ANY SURFACE OTHER THAN THE BLADE TERMINALS
h. NO PARTING LINES, FLASH, MISMATCHES OR EJECTOR MARKS PERMISSIBLE ON THE INDICATED NOSE SURFACE OR TRANSITION TO INTERNAL SHROUD SURFACE.

THIS DRAWING CONTAINS INFORMATION THAT IS PROPRIETARY TO MOLEX ELECTRONIC TECHNOLOGIES, LLC AND SHOULD NOT BE USED WITHOUT WRITTEN PERMISSION

FUNCTIONAL SYMBOLS: F A = 0; F C = 0; F D = 0
DIVISIONAL SYMBOLS

DIMENSION UNITS	SCALE
mm	5:1
GENERAL TOLERANCES (UNLESS SPECIFIED)	
ANGULAR TOL	± 3.0°
4 PLACES	±
3 PLACES	±
2 PLACES	± 0.100
1 PLACE	± 0.20
0 PLACES	±
DRAFT WHERE APPLICABLE MUST REMAIN WITHIN DIMENSIONS	

CURRENT REV DESC: Added Interference Ribs to 2X4

PHASE: Design Production
CO NO: CO-000001789
DRWN: Michael Li 2022-11-23
CHK'D: Michael Li 2022-12-02
APPR: Mike Vanslambrouck 2022-12-15

INITIAL REVISION:
DRWN: MLI149
APPR:

THIRD ANGLE PROJECTION | DRAWING: A1-SIZE | SERIES: 34895

molex

MINI50 SEALED DUAL ROW HEADER INTERFACE

PRODUCT SALES DRAWING

DOCUMENT NUMBER	DOC TYPE	DOC PART	REVISION
348950800	PSD	000	B

MATERIAL NUMBER	CUSTOMER	SHEET NUMBER
SEE CHART		1 OF 6

FORMAT: TCdesignA1
SIZE: 420x297
DATE: 2017/06/21

SHEET DESCRIPTION
TERMINAL CONFIGURATIONS

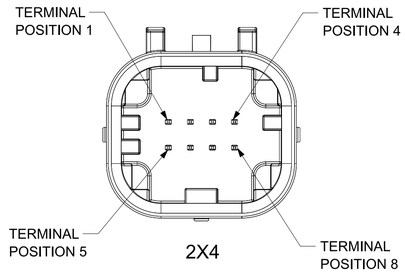

2X4

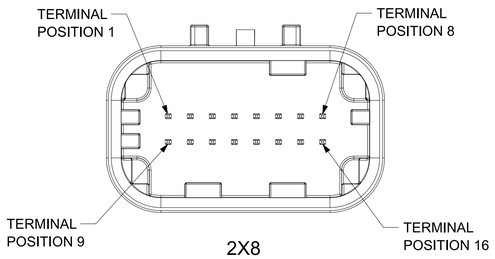

2X8

THIS DRAWING CONTAINS INFORMATION THAT IS PROPRIETARY TO MOLEX ELECTRONIC TECHNOLOGIES, LLC AND SHOULD NOT BE USED WITHOUT WRITTEN PERMISSION

FUNCTIONAL SYMBOLS	DIMENSION UNITS	SCALE
EA = 0	mm	4:1
EC = 0	GENERAL TOLERANCES (UNLESS SPECIFIED)	
EP = 0	ANGULAR TOL	± 3.0°
DIVISIONAL SYMBOLS	4 PLACES	±
	3 PLACES	±
	2 PLACES	± 0.100
	1 PLACE	± 0.20
	0 PLACES	±
	DRAFT WHERE APPLICABLE MUST REMAIN WITHIN DIMENSIONS	

CURRENT REV DESC: Added Interference Ribs to 2X4

PHASE: Design Production
CO NO: CO-000001789
DRWN: Michael Li 2022-11-23
CHK'D: Michael Li 2022-12-02
APPR: Mike Vanslambrouck 2022-12-15

INITIAL REVISION:
DRWN: MLI149
APPR:

molex

MINI50 SEALED DUAL ROW HEADER INTERFACE

PRODUCT SALES DRAWING

DOCUMENT NUMBER	DOC TYPE	DOC PART	REVISION
348950800	PSD	000	B

THIRD ANGLE PROJECTION	DRAWING	SERIES	MATERIAL NUMBER	CUSTOMER	SHEET NUMBER
	A1-SIZE	34895	SEE CHART		2 OF 6

SHEET DESCRIPTION
KEY CONFIGURATIONS

2X4

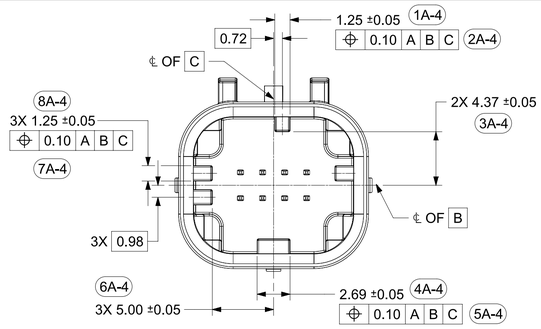

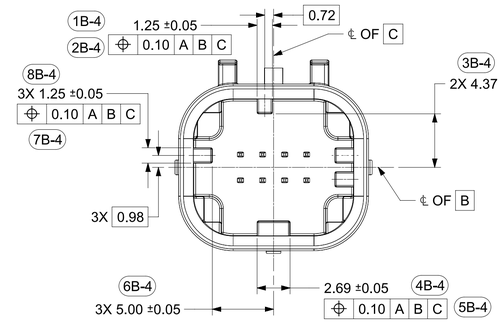

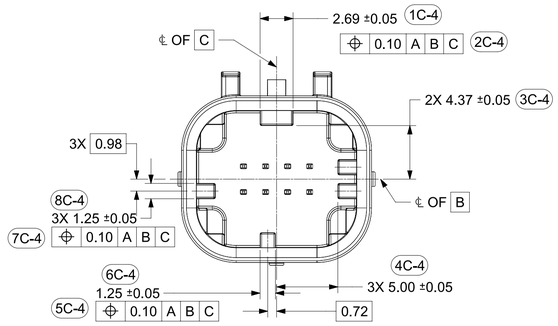

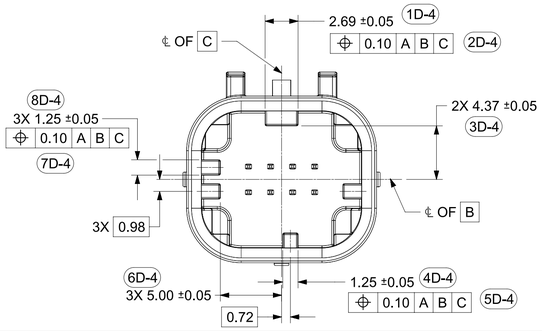

2X8

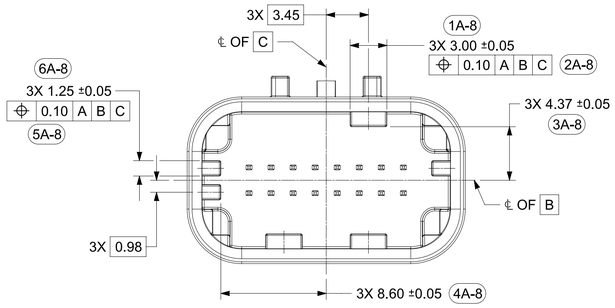

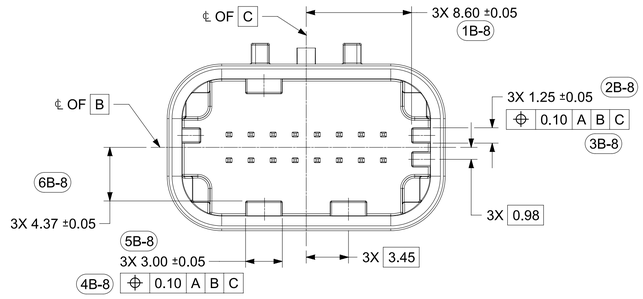

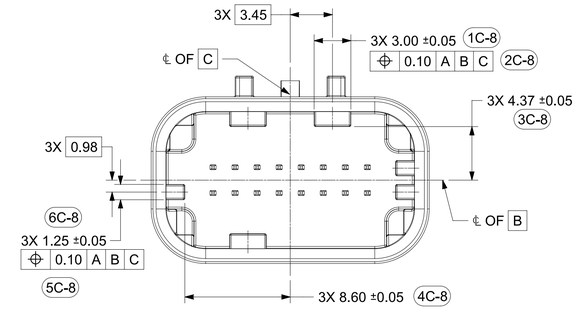

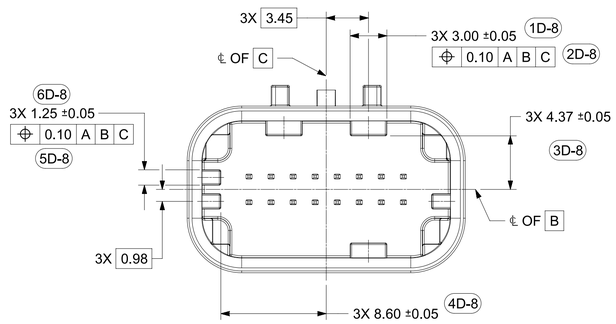

FUNCTIONAL SYMBOLS	THIS DRAWING CONTAINS INFORMATION THAT IS PROPRIETARY TO MOLEX ELECTRONIC TECHNOLOGIES, LLC AND SHOULD NOT BE USED WITHOUT WRITTEN PERMISSION			
FA = 0	DIMENSION UNITS: mm	SCALE: 4:1	CURRENT REV DESC: Added Interference Ribs to 2X4	molex
FC = 0	GENERAL TOLERANCES (UNLESS SPECIFIED)		PHASE: Design Production	MINI50 SEALED DUAL ROW HEADER INTERFACE
FP = 0	ANGULAR TOL ± 3.0°		CO NO: CO-000001789	
DIVISIONAL SYMBOLS	4 PLACES ±		DRWN: Michael Li 2022-11-23	PRODUCT SALES DRAWING
	3 PLACES ±		CHK'D: Michael Li 2022-12-02	
	2 PLACES ± 0.100		APPR: Mike Vanslambrouck 2022-12-15	
	1 PLACE ± 0.20		INITIAL REVISION:	DOCUMENT NUMBER: 348950800 / DOC TYPE: PSD / DOC PART: 000 / REVISION: B
	0 PLACES ±		DRWN: MLI149	
	DRAFT WHERE APPLICABLE MUST REMAIN WITHIN DIMENSIONS		APPR:	
	THIRD ANGLE PROJECTION	DRAWING: A1-SIZE	SERIES: 34895	MATERIAL NUMBER: SEE CHART / CUSTOMER / SHEET NUMBER: 3 OF 6

SHEET DESCRIPTION
INTERFACE DEFINITION

CHARTED DIMENSION						
DESCRIPTION	DIMENSIONS					
	A	B	D	E	F	G
2X4	2.70	11.30	7.75	13.10	12.40	10.40
2X8	6.30	18.50	11.35	20.30	19.60	14.00

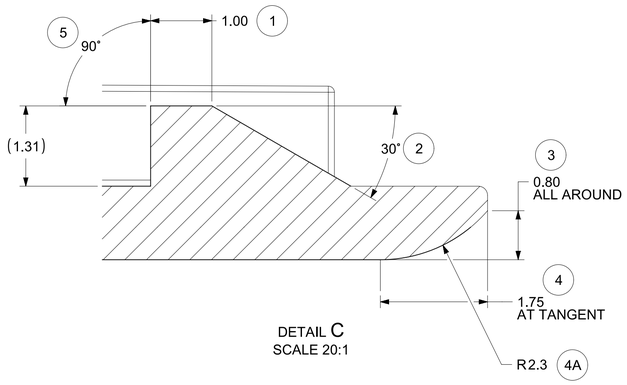

DETAIL C
SCALE 20:1

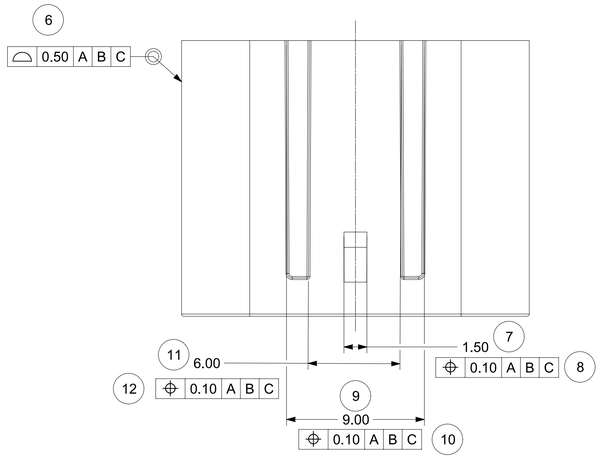

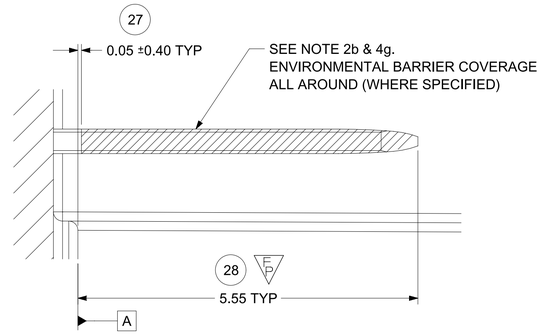

DETAIL E
SCALE 20:1

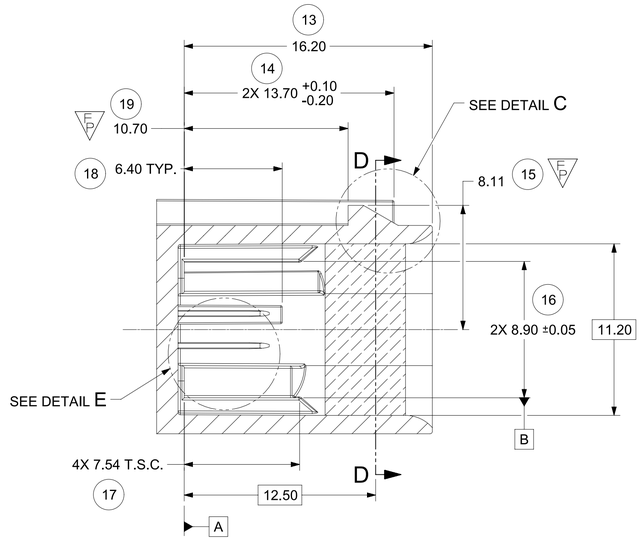

SECTION B-B

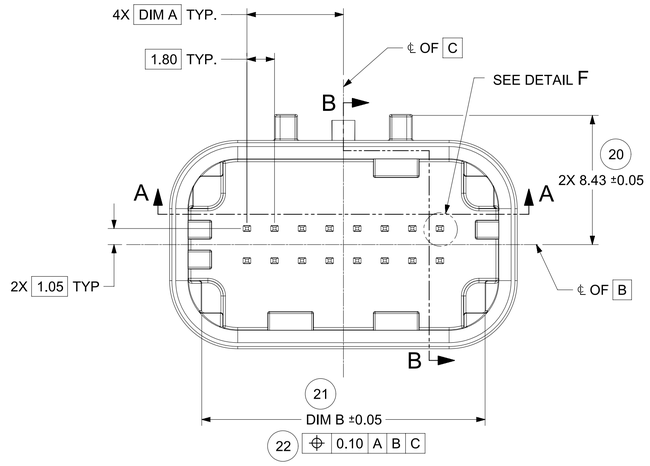

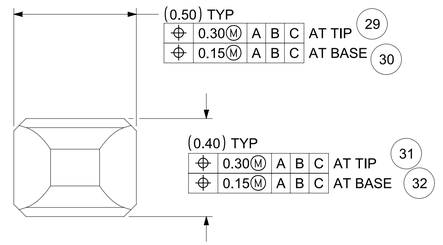

DETAIL F
SCALE 80:1

SEE NOTE 2b.
REFER TO MOLEX SALES DWG 34750050
AND EWCAP-001 REV.P 050-T001
0.50 TERMINAL BLADE CONFIGURATION

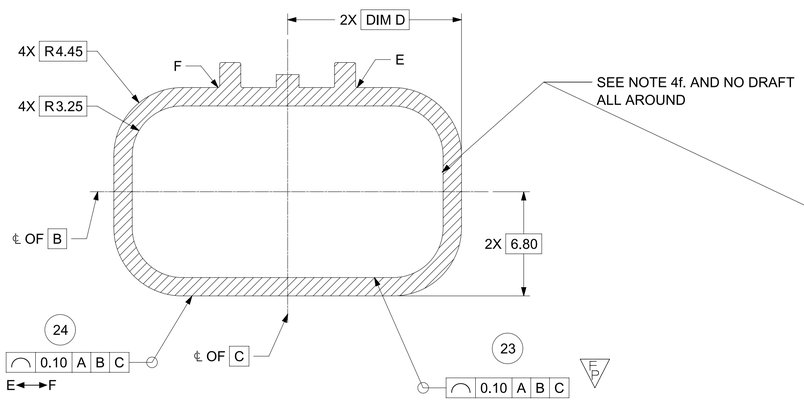

SECTION D-D

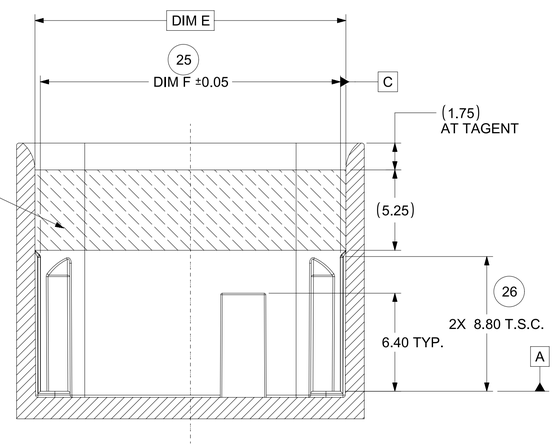

SECTION A-A

PACKAGING FRAME

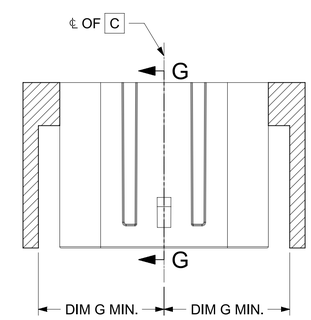

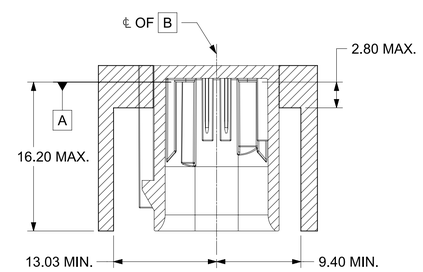

SECTION G-G

FUNCTIONAL SYMBOLS	
E/A	= 0
E/C	= 0
E/P	= 4
DIVISIONAL SYMBOLS	

THIS DRAWING CONTAINS INFORMATION THAT IS PROPRIETARY TO MOLEX ELECTRONIC TECHNOLOGIES, LLC AND SHOULD NOT BE USED WITHOUT WRITTEN PERMISSION

DIMENSION UNITS	SCALE
mm	5:1

GENERAL TOLERANCES (UNLESS SPECIFIED)	
ANGULAR TOL	± 3.0°
4 PLACES	±
3 PLACES	±
2 PLACES	± 0.100
1 PLACE	± 0.20
0 PLACES	±

DRAFT WHERE APPLICABLE MUST REMAIN WITHIN DIMENSIONS

CURRENT REV DESC: Added Interference Ribs to 2X4

PHASE: Design Production
CO NO: CO-000001789
DRWN: Michael Li 2022-11-23
CHK'D: Michael Li 2022-12-02
APPR: Mike Vanslambrouck 2022-12-15

INITIAL REVISION:
DRWN: MLI149
APPR:

THIRD ANGLE PROJECTION | DRAWING: A1-SIZE | SERIES: 34895

molex

MINI50 SEALED DUAL ROW HEADER INTERFACE

PRODUCT SALES DRAWING

DOCUMENT NUMBER	DOC TYPE	DOC PART	REVISION
348950800	PSD	000	B

MATERIAL NUMBER	CUSTOMER	SHEET NUMBER
SEE CHART		4 OF 6

FORMAT TC-Engineer-F
REVISION: A
DATE: 2021/08/11

SHEET DESCRIPTION
INTERFERENCE RIBS DEFINITION (FOR 2X4 ONLY)

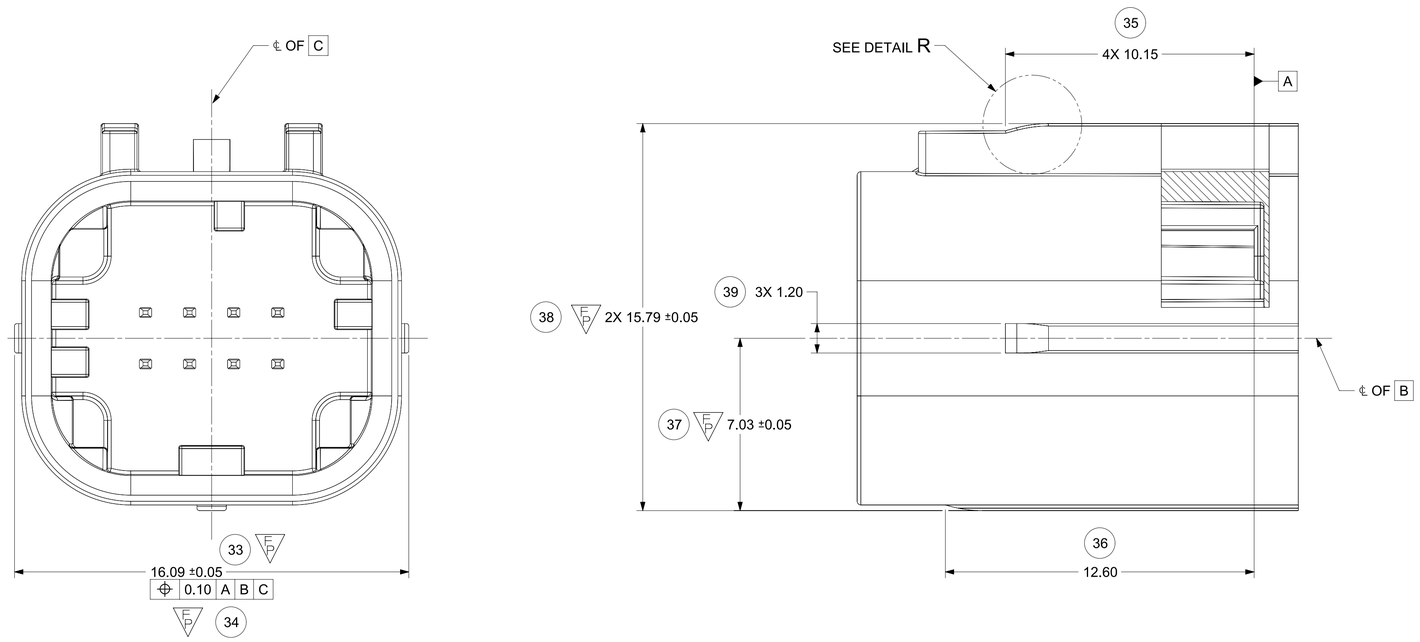

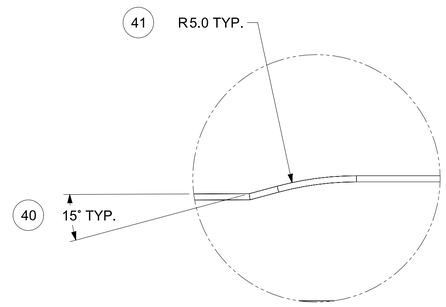

DETAIL R
SCALE 20:1

FUNCTIONAL SYMBOLS	
A	= 0
C	= 0
D	= 4
DIVISIONAL SYMBOLS	

THIS DRAWING CONTAINS INFORMATION THAT IS PROPRIETARY TO MOLEX ELECTRONIC TECHNOLOGIES, LLC AND SHOULD NOT BE USED WITHOUT WRITTEN PERMISSION

DIMENSION UNITS	SCALE
mm	8:1

GENERAL TOLERANCES (UNLESS SPECIFIED)	
ANGULAR TOL	± 3.0°
4 PLACES	±
3 PLACES	±
2 PLACES	± 0.100
1 PLACE	± 0.20
0 PLACES	±

DRAFT WHERE APPLICABLE MUST REMAIN WITHIN DIMENSIONS

CURRENT REV DESC: Added Interference Ribs to 2X4

PHASE: Design Production
CO NO: CO-000001789
DRWN: Michael Li 2022-11-23
CHK'D: Michael Li 2022-12-02
APPR: Mike Vanslambrouck 2022-12-15

INITIAL REVISION:
DRWN: MLI149
APPR:

THIRD ANGLE PROJECTION

DRAWING	SERIES
A1-SIZE	34895

molex

MINI50 SEALED DUAL ROW HEADER INTERFACE

PRODUCT SALES DRAWING

DOCUMENT NUMBER	DOC TYPE	DOC PART	REVISION
348950800	PSD	000	B

MATERIAL NUMBER	CUSTOMER	SHEET NUMBER
SEE CHART		5 OF 6

FORMAT TC10-prod-A7
REVISION: A
DATE: 2021/08/11

SHEET DESCRIPTION
DATUM TARGETS

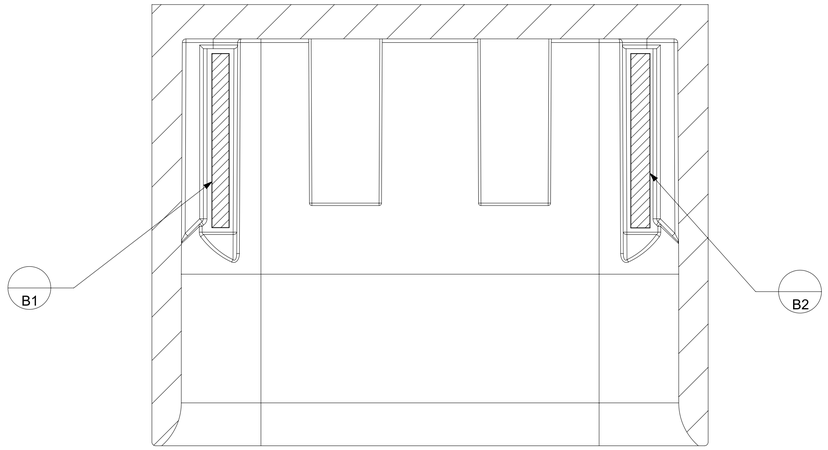

SECTION P-P

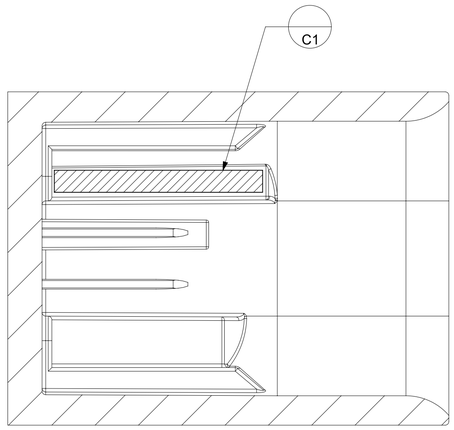

SECTION L-L

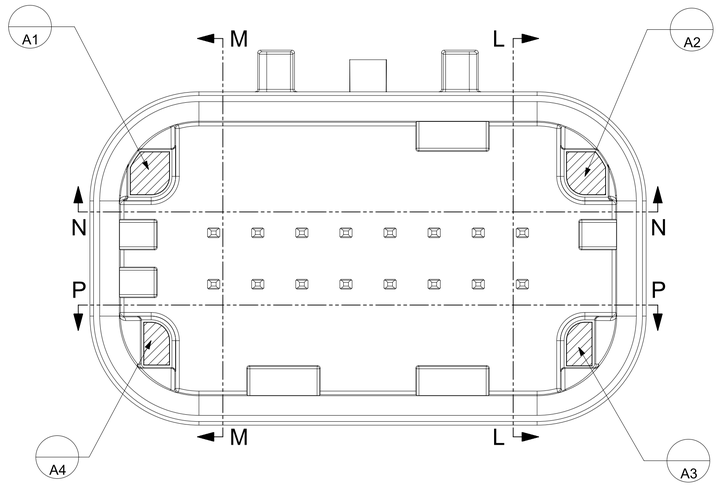

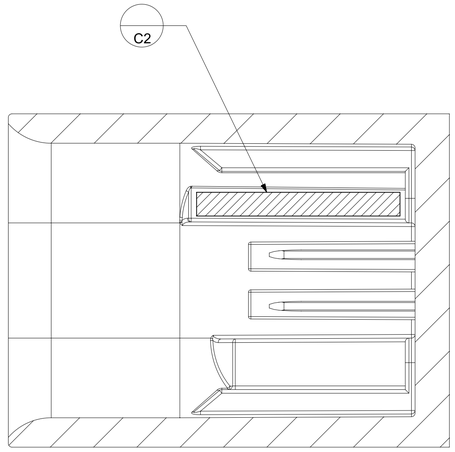

SECTION M-M

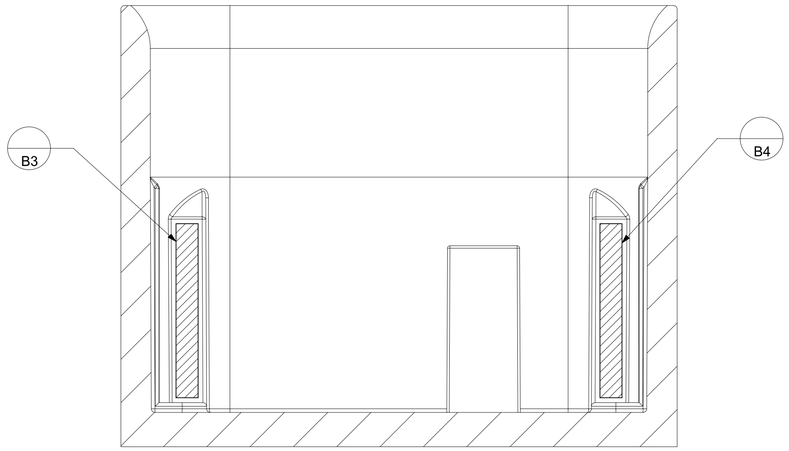

SECTION N-N

FUNCTIONAL SYMBOLS			THIS DRAWING CONTAINS INFORMATION THAT IS PROPRIETARY TO MOLEX ELECTRONIC TECHNOLOGIES, LLC AND SHOULD NOT BE USED WITHOUT WRITTEN PERMISSION								
	DIMENSION UNITS	SCALE	CURRENT REV DESC: Added Interference Ribs to 2X4					molex			
FA = 0	mm	8:1									
FC = 0	GENERAL TOLERANCES (UNLESS SPECIFIED)		PHASE: Design Production					MINI50 SEALED DUAL ROW HEADER INTERFACE			
FP = 0	ANGULAR TOL	± 3.0°	CO NO: CO-000001789								
	4 PLACES	±	DRWN: Michael Li	2022-11-23							
DIVISIONAL SYMBOLS	3 PLACES	±	CHK'D: Michael Li	2022-12-02				PRODUCT SALES DRAWING			
	2 PLACES	± 0.100	APPR: Mike Vanslambrouck	2022-12-15							
	1 PLACE	± 0.20	INITIAL REVISION:					DOCUMENT NUMBER	DOC TYPE	DOC PART	REVISION
	0 PLACES	±	DRWN: MLI149					348950800	PSD	000	B
	DRAFT WHERE APPLICABLE MUST REMAIN WITHIN DIMENSIONS		APPR:		THIRD ANGLE PROJECTION	DRAWING	SERIES	MATERIAL NUMBER	CUSTOMER		SHEET NUMBER
						A1-SIZE	34895	SEE CHART			6 OF 6