

NOTES

1. 極数/2 = 偶数に適応
   APPLY FOR CIRCUIT SIZE / 2 =EVEN
2. 適用製品及び各種仕様書はSHEET 3を参照のこと
   REFER TO SHEET 3 ABOUT APPLICABLE PRODUCTS AND VARIOUS SPECIFICATIONS.

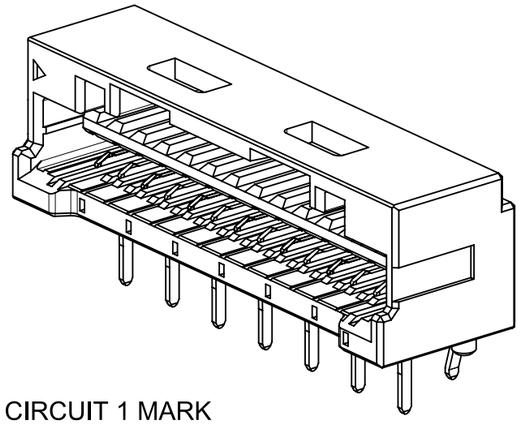

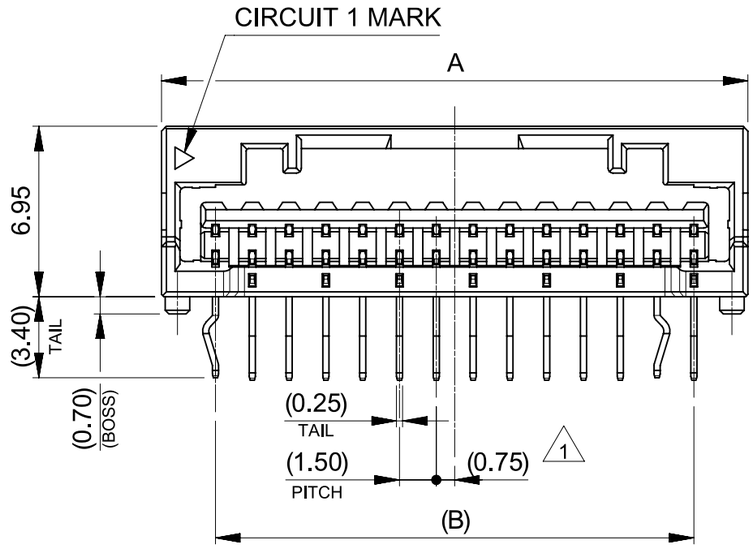

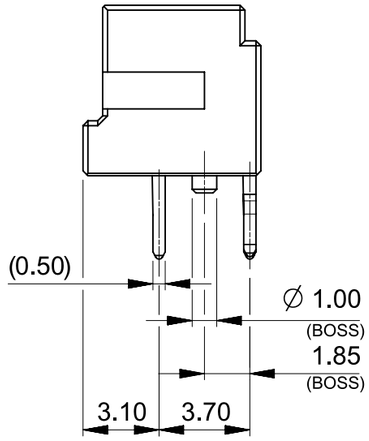

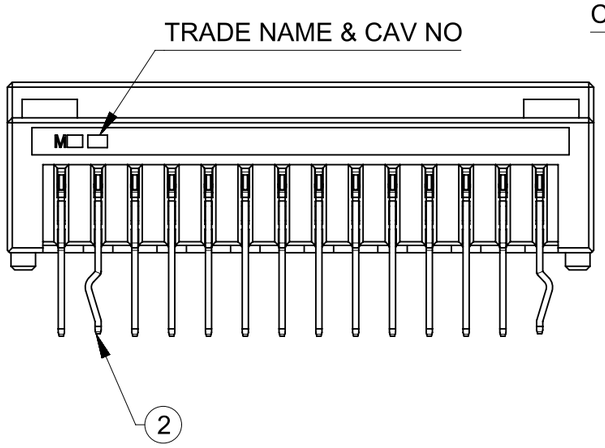

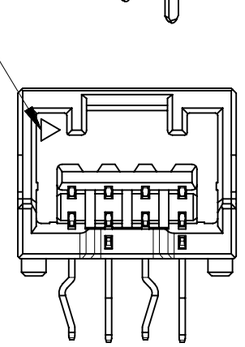

2~11極 CKT1マーク位置
MARK POSITION AT 2~11 CKTS

C		B	A		極数 CIRCUIT NO
24.1		21	25.4		15
22.6		19.5	23.9		14
21.1		18	22.4		13
19.6		16.5	20.9		12
18.1	±0.25	15	19.4		11
16.6		13.5	17.9	±0.25	10
15.1		12	16.4		9
13.6		10.5	14.9		8
12.1		9	13.4		7
10.6		7.5	11.9		6
9.1		6	10.4		5
7.6	(±0.20)	4.5	8.9		4
6.1		3	7.4	(±0.20)	3
4.6		1.5	5.9		2

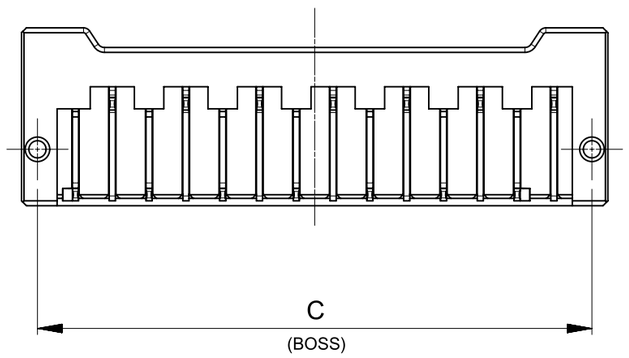

3 オーダー番号(製品番号) :
ORDER No(MATERIAL No) :

503175 ****

- 503175 : シリーズ番号 / SERIES NO
- 1桁目 : 極数 / CIRCUIT SIZE
- 2桁目 : ボス有無 / WITH OR WITHOUT BOSS
- 3桁目 : 色 / COLOR

CIRCUIT	BOSS		COLOR	
02~15	0	WITH BOSS	0	ナチュラル (ベージュ) NATURAL (BEIGE)
			1	黒 BLACK
			2	赤 RED
			3	黄 YELLOW
			4	青 BLUE
	1	W/O BOSS	5	桃 PINK
			6	緑 GREEN
			7	茶 BROWN
			8	橙 ORANGE
			9	紫 VIOLET

番号 NO.	部品 PART	材質 MATERIAL
①	ハウジング HOUSING	ポリアミド(PA) UL94V-0 色 : SEE CHART POLYAMIDE(PA) UL94V-0 COLOR : SEE CHART
②	ターミナル TERMINAL	銅合金 COPPER ALLOY
		錫めっき : 1.0 micro-meter MIN MATTE TIN PLATING
		ニッケルめっき(下地) : 1.0 micro-meter MIN NICKEL (UNDER PLATING)

DOCUMENT STATUS	P1	RELEASE DATE	2020/03/03 06:59:10

THIS DRAWING CONTAINS INFORMATION THAT IS PROPRIETARY TO MOLEX ELECTRONIC TECHNOLOGIES, LLC AND SHOULD NOT BE USED WITHOUT WRITTEN PERMISSION

DIMENSION UNITS	SCALE
mm	NTS

GENERAL TOLERANCES (UNLESS SPECIFIED)

ANGULAR TOL	±	3.0 °
4 PLACES	±	0.2
3 PLACES	±	0.2
2 PLACES	±	0.2
1 PLACE	±	0.2
0 PLACES	±	0.2

DRAFT WHERE APPLICABLE MUST REMAIN WITHIN DIMENSIONS

CURRENT REV DESC:

EC NO: 632623
DRWN: MIKEDA01 2019/07/19
CHK'D: SAKIYAMA 2020/02/28
APPR: KOMURAKAMI 2020/03/03

INITIAL REVISION:
DRWN: MIKEDA01 2019/07/19
APPR: KOMURAKAMI 2020/03/03

molex

CLIK-MATE 1.5 DIP R/A
SINGLE ROW DIP R/A TYPE

PRODUCT CUSTOMER DRAWING

DOCUMENT NUMBER	DOC TYPE	DOC PART	REVISION
5031750000-SD	PSD	000	A

THIRD ANGLE PROJECTION	DRAWING	SERIES
	A3-SIZE	503175

MATERIAL NUMBER	CUSTOMER	SHEET NUMBER
503175****	GENERAL	1 OF 4

FORMAT: tb-prod-A3
REVISION: H
DATE: 2018/01/18

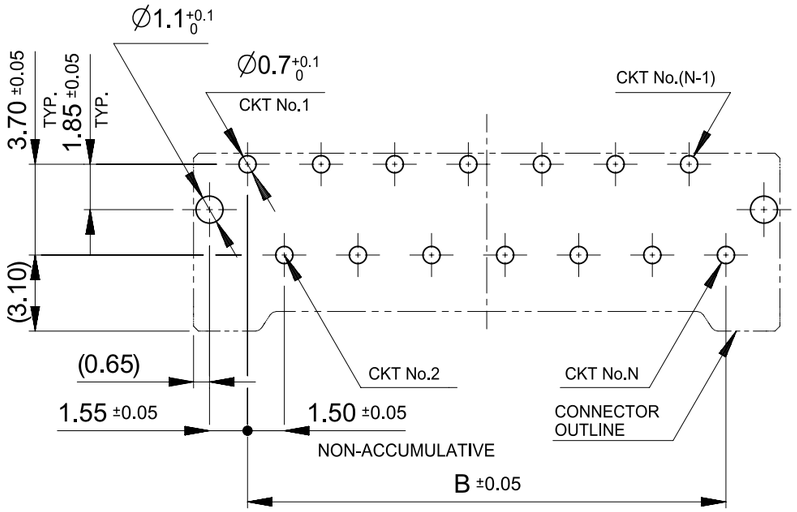

基板取付穴推奨寸法(マウント面)
RECOMMENDED PCB HOLE DIMENSION
(MOUNTING SIDE) (t=1.6)

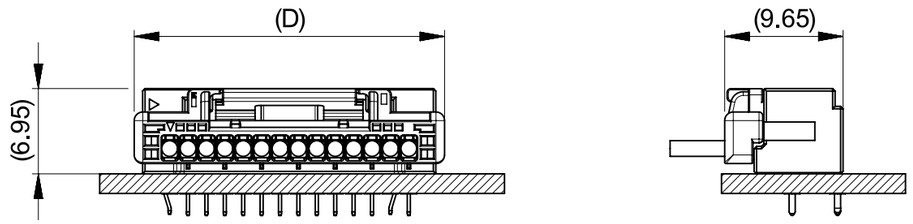

嵌合図
MATED CONNECTORS

適用製品及び各種仕様書
APPLICABLE PRODUCTS AND VARIOUS SPECIFICATIONS

	PART NUMBER	DOCUMENT NUMBER
梱包仕様書 PACKAGING SPECIFICATION	503175 **0* 503175 **1*	SPK-503175-001

	HOUSING	TERMINAL	
		#24-28	#26-30
適用嵌合相手 MATE WITH			
シリーズ番号 SERIES NUMBER	502578	502579	503429
製品仕様書 PRODUCT SPECIFICATION	5025780002-PS		
アプリケーション仕様書 APPLICATION SPECIFICATION	AS-502578-001		

THIS DRAWING CONTAINS INFORMATION THAT IS PROPRIETARY TO MOLEX ELECTRONIC TECHNOLOGIES, LLC AND SHOULD NOT BE USED WITHOUT WRITTEN PERMISSION

DIMENSION UNITS	SCALE
mm	NTS

GENERAL TOLERANCES (UNLESS SPECIFIED)

ANGULAR TOL	±	3.0 °
4 PLACES	±	0.2
3 PLACES	±	0.2
2 PLACES	±	0.2
1 PLACE	±	0.2
0 PLACES	±	0.2

DRAFT WHERE APPLICABLE MUST REMAIN WITHIN DIMENSIONS

CURRENT REV DESC:

EC NO: 632623
DRWN: MIKEDA01 2019/07/19
CHK'D: SAKIYAMA 2020/02/28
APPR: KOMURAKAMI 2020/03/03

INITIAL REVISION:
DRWN: MIKEDA01 2019/07/19
APPR: KOMURAKAMI 2020/03/03

molex

CLIK-MATE 1.5 DIP R/A
SINGLE ROW DIP R/A TYPE

PRODUCT CUSTOMER DRAWING

DOCUMENT NUMBER	DOC TYPE	DOC PART	REVISION
5031750000-SD	PSD	000	A

THIRD ANGLE PROJECTION	DRAWING	SERIES	MATERIAL NUMBER	CUSTOMER	SHEET NUMBER
	A3-SIZE	503175	503175****	GENERAL	2 OF 4

DOCUMENT STATUS	P1	RELEASE DATE	2020/03/03 06:59:10

FORMAT: mxd_2D_Dwg_A3
REVISION: H
DATE: 2018/01/16

極数別ハウジング形状
HOUSING SHAPE AT EACH CKT

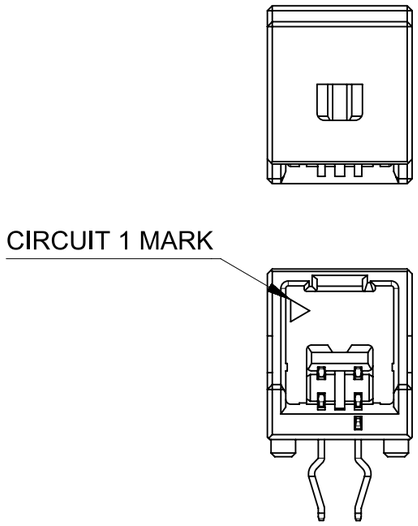

2極
2 CIRCUITS

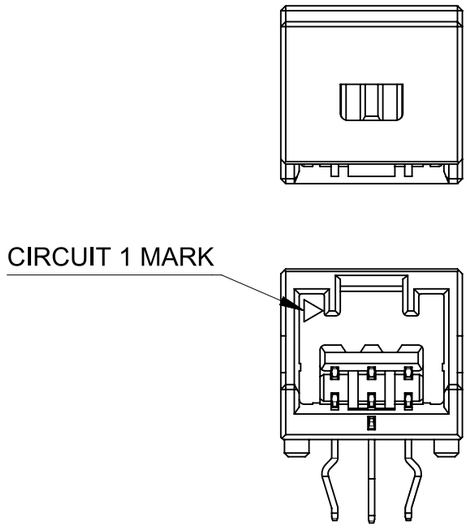

3極
3 CIRCUITS

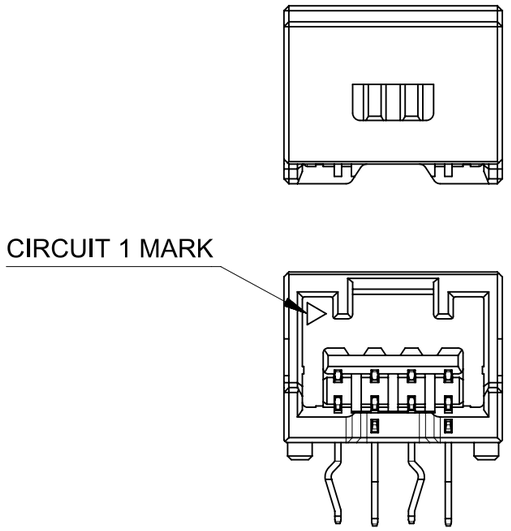

4~5極
4-5 CIRCUITS

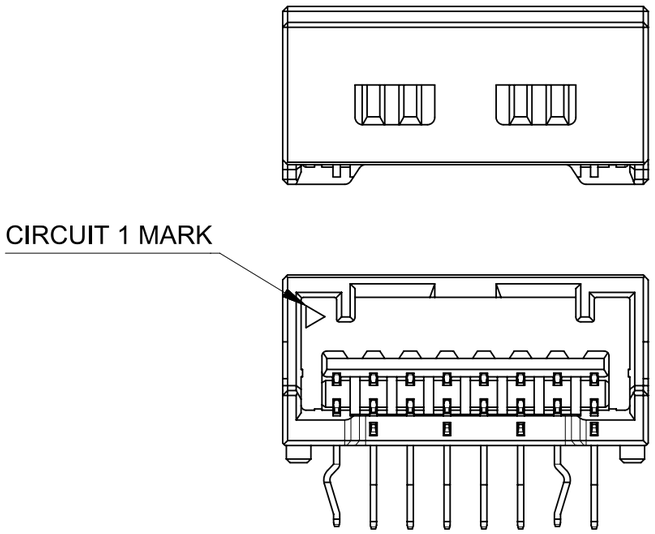

6~11極
6-11 CIRCUITS

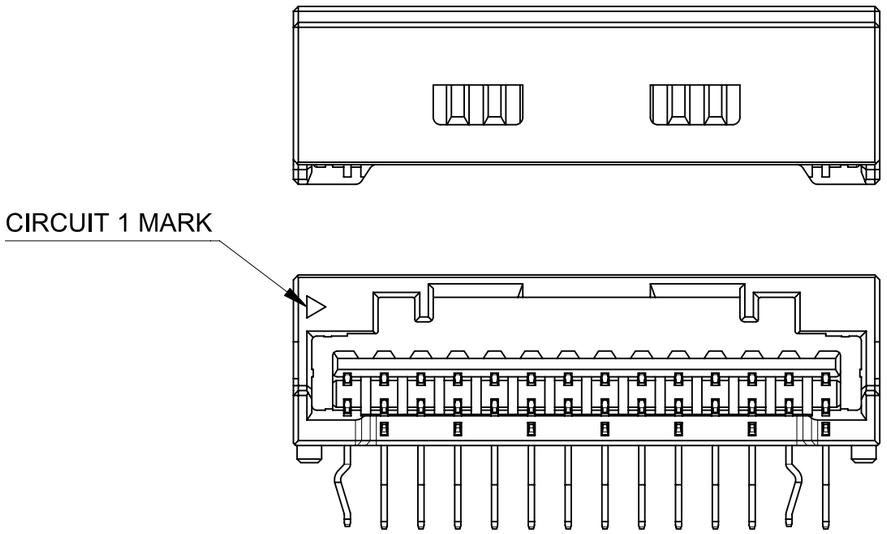

12~15極
12-15 CIRCUITS

THIS DRAWING CONTAINS INFORMATION THAT IS PROPRIETARY TO MOLEX ELECTRONIC TECHNOLOGIES, LLC AND SHOULD NOT BE USED WITHOUT WRITTEN PERMISSION

DIMENSION UNITS	SCALE
mm	NTS

GENERAL TOLERANCES (UNLESS SPECIFIED)

ANGULAR TOL	±	3.0 °
4 PLACES	±	0.2
3 PLACES	±	0.2
2 PLACES	±	0.2
1 PLACE	±	0.2
0 PLACES	±	0.2

DRAFT WHERE APPLICABLE MUST REMAIN WITHIN DIMENSIONS

CURRENT REV DESC:

EC NO: 632623
DRWN: MIKEDA01 2019/07/19
CHK'D: SAKIYAMA 2020/02/28
APPR: KOMURAKAMI 2020/03/03

INITIAL REVISION:
DRWN: MIKEDA01 2019/07/19
APPR: KOMURAKAMI 2020/03/03

THIRD ANGLE PROJECTION | DRAWING: A3-SIZE | SERIES: 503175

molex

CLIK-MATE 1.5 DIP R/A
SINGLE ROW DIP R/A TYPE

PRODUCT CUSTOMER DRAWING

DOCUMENT NUMBER	DOC TYPE	DOC PART	REVISION
5031750000-SD	PSD	000	A

MATERIAL NUMBER	CUSTOMER	SHEET NUMBER
503175****	GENERAL	3 OF 4

DOCUMENT STATUS	P1	RELEASE DATE	2020/03/03 06:59:10

FORMAT: master-thermal-A3
REVISION: H
DATE: 2018/01/16

製品一覧
PRODUCTS LIST

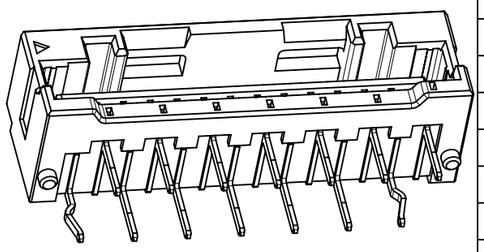

ボス有 WITH BOSS										BOSS
紫 VIOLET	橙 ORANGE	茶 BROWN	緑 GREEN	桃 PINK	青 BLUE	黄 YELLOW	赤 RED	黒 BLACK	ナチュラル(ベージュ) NATURAL(BEIGE)	HOUSING COLOR
503175 1509	503175 1508	503175 1507	503175 1506	503175 1505	503175 1504	503175 1503	503175 1502	503175 1501	503175 1500	15
503175 1409	503175 1408	503175 1407	503175 1406	503175 1405	503175 1404	503175 1403	503175 1402	503175 1401	503175 1400	14
503175 1309	503175 1308	503175 1307	503175 1306	503175 1305	503175 1304	503175 1303	503175 1302	503175 1301	503175 1300	13
503175 1209	503175 1208	503175 1207	503175 1206	503175 1205	503175 1204	503175 1203	503175 1202	503175 1201	503175 1200	12
503175 1109	503175 1108	503175 1107	503175 1106	503175 1105	503175 1104	503175 1103	503175 1102	503175 1101	503175 1100	11
503175 1009	503175 1008	503175 1007	503175 1006	503175 1005	503175 1004	503175 1003	503175 1002	503175 1001	503175 1000	10
503175 0909	503175 0908	503175 0907	503175 0906	503175 0905	503175 0904	503175 0903	503175 0902	503175 0901	503175 0900	9
503175 0809	503175 0808	503175 0807	503175 0806	503175 0805	503175 0804	503175 0803	503175 0802	503175 0801	503175 0800	8
503175 0709	503175 0708	503175 0707	503175 0706	503175 0705	503175 0704	503175 0703	503175 0702	503175 0701	503175 0700	7
503175 0609	503175 0608	503175 0607	503175 0606	503175 0605	503175 0604	503175 0603	503175 0602	503175 0601	503175 0600	6
503175 0509	503175 0508	503175 0507	503175 0506	503175 0505	503175 0504	503175 0503	503175 0502	503175 0501	503175 0500	5
503175 0409	503175 0408	503175 0407	503175 0406	503175 0405	503175 0404	503175 0403	503175 0402	503175 0401	503175 0400	4
503175 0309	503175 0308	503175 0307	503175 0306	503175 0305	503175 0304	503175 0303	503175 0302	503175 0301	503175 0300	3
503175 0209	503175 0208	503175 0207	503175 0206	503175 0205	503175 0204	503175 0203	503175 0202	503175 0201	503175 0200	2
オーダー番号 ORDER NO										極数 CIRCUIT NO

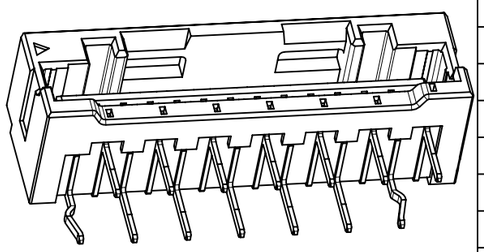

ボス無 WITHOUT BOSS										BOSS
紫 VIOLET	橙 ORANGE	茶 BROWN	緑 GREEN	桃 PINK	青 BLUE	黄 YELLOW	赤 RED	黒 BLACK	ナチュラル(ベージュ) NATURAL(BEIGE)	HOUSING COLOR
503175 1519	503175 1518	503175 1517	503175 1516	503175 1515	503175 1514	503175 1513	503175 1512	503175 1511	503175 1510	15
503175 1419	503175 1418	503175 1417	503175 1416	503175 1415	503175 1414	503175 1413	503175 1412	503175 1411	503175 1410	14
503175 1319	503175 1318	503175 1317	503175 1316	503175 1315	503175 1314	503175 1313	503175 1312	503175 1311	503175 1310	13
503175 1219	503175 1218	503175 1217	503175 1216	503175 1215	503175 1214	503175 1213	503175 1212	503175 1211	503175 1210	12
503175 1119	503175 1118	503175 1117	503175 1116	503175 1115	503175 1114	503175 1113	503175 1112	503175 1111	503175 1110	11
503175 1019	503175 1018	503175 1017	503175 1016	503175 1015	503175 1014	503175 1013	503175 1012	503175 1011	503175 1100	10
503175 1919	503175 0918	503175 0917	503175 0916	503175 0915	503175 0914	503175 0913	503175 0912	503175 0911	503175 0910	9
503175 0819	503175 1818	503175 0817	503175 0816	503175 0815	503175 0814	503175 0813	503175 0812	503175 0811	503175 0810	8
503175 0719	503175 0718	503175 1717	503175 0716	503175 0715	503175 0714	503175 0713	503175 0712	503175 0711	503175 0710	7
503175 0619	503175 0618	503175 0617	503175 1616	503175 0615	503175 0614	503175 0613	503175 0612	503175 0611	503175 0610	6
503175 0519	503175 0518	503175 0517	503175 0516	503175 1515	503175 0514	503175 0513	503175 0512	503175 0511	503175 0510	5
503175 0419	503175 0418	503175 0417	503175 0416	503175 0415	503175 1414	503175 0413	503175 0412	503175 0411	503175 0410	4
503175 0319	503175 0318	503175 0317	503175 0316	503175 0315	503175 0314	503175 1313	503175 0312	503175 0311	503175 0310	3
503175 0219	503175 0218	503175 0217	503175 0216	503175 0215	503175 0214	503175 0213	503175 1212	503175 0211	503175 0210	2
オーダー番号 ORDER NO										極数 CIRCUIT NO

THIS DRAWING CONTAINS INFORMATION THAT IS PROPRIETARY TO MOLEX ELECTRONIC TECHNOLOGIES, LLC AND SHOULD NOT BE USED WITHOUT WRITTEN PERMISSION

DIMENSION UNITS	SCALE
mm	NTS

GENERAL TOLERANCES (UNLESS SPECIFIED)		
ANGULAR TOL	±	3.0 °
4 PLACES	±	0.2
3 PLACES	±	0.2
2 PLACES	±	0.2
1 PLACE	±	0.2
0 PLACES	±	0.2

DRAFT WHERE APPLICABLE MUST REMAIN WITHIN DIMENSIONS

CURRENT REV DESC:

EC NO: 632623
DRWN: MIKEDA01 2019/07/19
CHK'D: SAKIYAMA 2020/02/28
APPR: KOMURAKAMI 2020/03/03

INITIAL REVISION:
DRWN: MIKEDA01 2019/07/19
APPR: KOMURAKAMI 2020/03/03

THIRD ANGLE PROJECTION | DRAWING: A3-SIZE | SERIES: 503175

molex

CLIK-MATE 1.5 DIP R/A
SINGLE ROW DIP R/A TYPE

PRODUCT CUSTOMER DRAWING

DOCUMENT NUMBER	DOC TYPE	DOC PART	REVISION
5031750000-SD	PSD	000	A

MATERIAL NUMBER	CUSTOMER	SHEET NUMBER
503175****	GENERAL	4 OF 4

DOCUMENT STATUS	P1	RELEASE DATE	2021/05/10 08:34:29

FORMAT: molex_drw_a3
REVISION: H
DATE: 2018/01/16