REVISIONS					
REV	ECO	DESCRIPTION	DATE	BY	APPR
B1	-	RELEASED DRAWING	Nov-29-2014	Ben	Tommy
B2	-	MODIFY WIRE RANGE	Mar-1-2019	Flan	Tommy

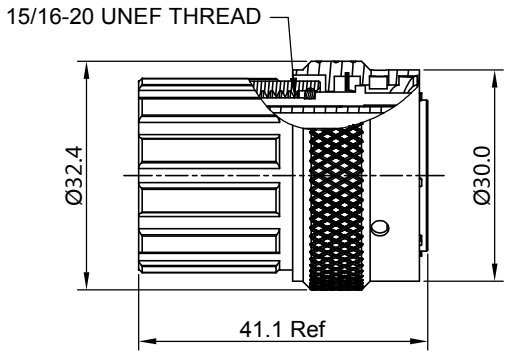

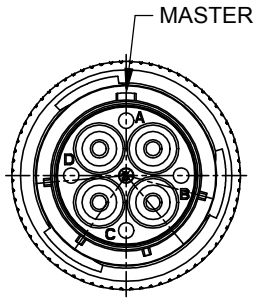

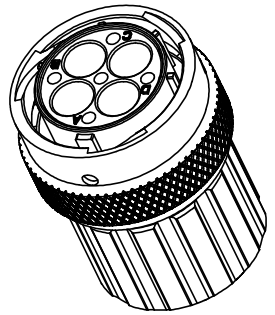

NOTES : (UNLESS OTHERWISE SPECIFIED)

1. MATERIAL :
   SHELL : ZINC ALLOY , NICKEL PLATED.
   INSERT : THERMOPLASTIC , UL94 V-0.
   END CAP : THERMOPLASTIC , UL94 V-0.
   COUPLING NUT : AL ALLOY , NICKEL PLATED.
   WAVE WASHER : STAINLESS STEEL.
   O-RING : NBR/SILICONE RUBBER.
   WIRE SEAL : SILICONE RUBBER.
   PLASTIC BUSHING : THERMOPLASTIC , UL94 V-0.
2. SPECIFICATIONS :
   2.1 RATED CURRENT : 45A (MAX) .
   2.2 RATED VOLTAGE : 600V (AC/DC) .
   2.3 OPERATING TEMPERATURE : SEE CHART.
   2.4 DIELECTRIC WITHSTANDING VOLTAGE : LESS THAN 2 MILLIAMPS CURRENT LEAKAGE@2000 VOLTS AC.
   2.5 INSULATION RESISTANCE : 5000 MEGOHMS MIN.
   2.6 IP--CLASS : IP67.
   2.7 MATING CYCLES DURABILITY : 500 CYCLES(MIN).
   2.8 RoHS COMPLIANT.
3. SUITABLE CONTACTS : 8# CONTACTS.
4. ALL DIMENSIONS ARE FOR REFERENCE USE ONLY.
5. CONTACT SIZE AND REAR SEAL WIRE RANGE :

CONTACT SIZE	MIN. INSUL O.D.	MAX. INS O.D.	WIRE RANGE
8#	Ø2.8mm	Ø4.1mm	12AWG

KEY POS	PART NUMBER	
	-40°C ~ 105°C	-40°C ~ 125°C
N	RT06164PNHEC	RT06164PNHEC03
W	RT06164PWHEC	RT06164PWHEC03
X	RT06164PXHEC	RT06164PXHEC03
Y	RT06164PYHEC	RT06164PYHEC03
Z	RT06164PZHEC	RT06164PZHEC03

	SEE PART NUMBER CHART		
QUANTITY	PART NUMBER	DESCRIPTION	ITEM

MATERIALS LIST

UNLESS OTHERWISE SPECIFIED
1) All dimensions are in metric(mm).
2) Tolerances are as follows:
1 PL DEC ±0.30 | Fractions ±1/64
2 PL DEC ±0.15 | Angles ±1°
3 PL DEC ±0.08
3) Note reference = X

MATERIAL SPECIFICATIONS:

PROCESS SPECIFICATIONS:

NEXT ASS'Y:

SIGNATURES		DATE
DRAWN:	Flan	Mar-1-2019
CHECKED:	Tod	Mar-1-2019
ENGINEER:		
APPROVAL:	Tommy	Mar-1-2019
CUSTOMER:		

THIS DRAWING IS SUPPLIED FOR INFORMATION ONLY. DESIGN FEATURES, SPECIFICATIONS AND PERFORMANCE DATA SHOWN HEREON ARE THE PROPERTY OF THE AMPHENOL CORPORATION. NO RIGHTS OF REPRODUCTION ARE IMPLIED. ALL DIMENSIONS ARE SUBJECT TO NORMAL MANUFACTURING VARIATIONS.

Amphenol

Sine Systems - www.amphenol-sine.com
44724 Morley Drive
Clinton Township, MI 48036

ECO-MATE,PLUG,
SIZE 16,4POS,PIN,END CAP.

SIZE	TYPE	DWG NO:	REVISION
B	C-	RT06164P*HEC*	B2

SCALE: NONE SHEET 1 OF 1

TITLE: ECO-MATE,PLUG,SIZE 16,4POS,PIN,END CAP.
DWG NO: RT06164P*HEC*
REV: B2
SH: 1
OF: 1

ecomate® RM/RSSM/Aquarius™ - Contact Size 3.6mm (1604 Insert Arrangement) Options

Crimp Contacts, 1604 Insert Arrangement, Machined					
Part Number		AWG	Wire Range (mm²)	For Use w Endcap	Plating
Male	Female				
MP10A23T	MS10A23T	12-10	3.0 - 6.0	Yes	Tin
MP10A23S	MS10A23S	12-10	3.0 - 6.0	Yes	Silver
MP10A23F	MS10A23F	12-10	3.0 - 6.0	Yes	Gold Flash
MP10A23G5	MS10A23G5	12-10	3.0 - 6.0	Yes	Gold 5µ"
MP10S23G10	MS10A23G10	12-10	3.0 - 6.0	Yes	Gold 10µ"
MP10A23G15	MS10A23G15	12-10	3.0 - 6.0	Yes	Gold 15µ"
MS10A23G30	MS10A23G30	12-10	3.0 - 6.0	Yes	Gold 30µ"

Tooling, Machined	
Part Number	Description
QXRT08	Contact Extraction Tool, # 8 (Ø 3.6mm) Contact
M300BT	Hand Crimper
WA27-300BT-EP	Pneumatic Crimper
TP968	Locator M3200BT and WA27-300BT-EP

Plating Options	
Symbol	Plating
T	Tin Plating Over Nickel
S	Silver Plating Over Nickel
F	Gold Plated
G5	Gold Plated (Thickeness 5µ")
G10	Gold Plated (Thickeness 10µ")
G15	Gold Plated (Thickeness 15µ")
G30	Gold Plated (Thickeness 30µ")