CUI INC
a bel group

SERIES: VMS-300 | DESCRIPTION: AC-DC POWER SUPPLY

FEATURES

- up to 300[2] W continuous power
- 12.5 W/in[3] power density
- universal input (90~264 Vac)
- 12 Vdc auxiliary fan output
- over voltage, short circuit, and over temperature protections
- built-in active PFC function
- efficiency up to 85%

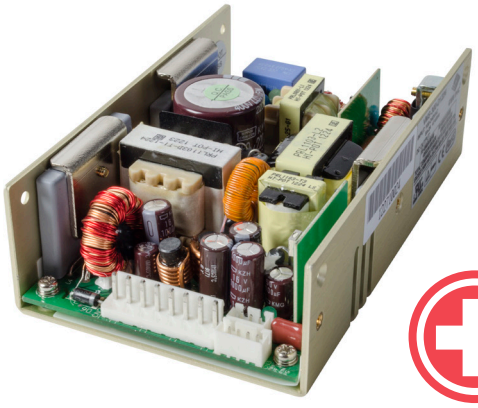

MODEL		output voltage (Vdc)	output current max (A)	output power max (W)	ripple and noise[4, 5] max (mVp-p)	efficiency min (%)
VMS-300-12		12	25[2]	300[2]	120	82
VMS-300-15		15	20[2]	300[2]	150	82
VMS-300-24		24	12.5[2]	300[2]	240	83
VMS-300-36		36	8.33[2]	300[2]	360	84
VMS-300-48		48	6.25[2]	300[2]	480	84
VMS-300-D0512*	V1 V2	5 12	24[3] 13.33[3]	240[3]	50 120	80
VMS-300-D1224	V1 V2	12 24	13.33[3] 6.67[3]	240[3]	120 240	85
VMS-300-12-CF		12	25	300	120	82
VMS-300-15-CF		15	20	300	150	82
VMS-300-24-CF		24	12.5	300	240	83
VMS-300-36-CF		36	8.33	300	360	84
VMS-300-48-CF		48	6.25	300	480	84
VMS-300-D0512-CF*	V1 V2	5 12	24 13.33	240[3]	50 120	80
VMS-300-D1224-CF	V1 V2	12 24	13.33 6.67	240[3]	120 240	85
VMS-300-12-CFS		12	25	300	120	82
VMS-300-15-CFS		15	20	300	150	82
VMS-300-24-CFS		24	12.5	300	240	83
VMS-300-36-CFS		36	8.33	300	360	84
VMS-300-48-CFS		48	6.25	300	480	84
VMS-300-D0512-CFS*	V1 V2	5 12	24 13.33	240[3]	50 120	80
VMS-300-D1224-CFS	V1 V2	12 24	13.33 6.67	240[3]	120 240	85

Notes:
1. Peak power of 600 W within 500 µs only applies to single output models
2. Total continuous output power will not exceed 300 W with 25 CFM forced air, 150 W without fan.
3. Total combined continuous output power will not exceed 240 W with 25 CFM forced air, 120 W without fan.
4. Measured at 10 kHz ~ 20 MHz, with 0.1 µF ceramic and 22 µF electrolytic parallel capacitors
5. 1% minimum load is required to maintain the ripple and regulation (10% for dual output models)
6. * Discontinued model.

PART NUMBER KEY

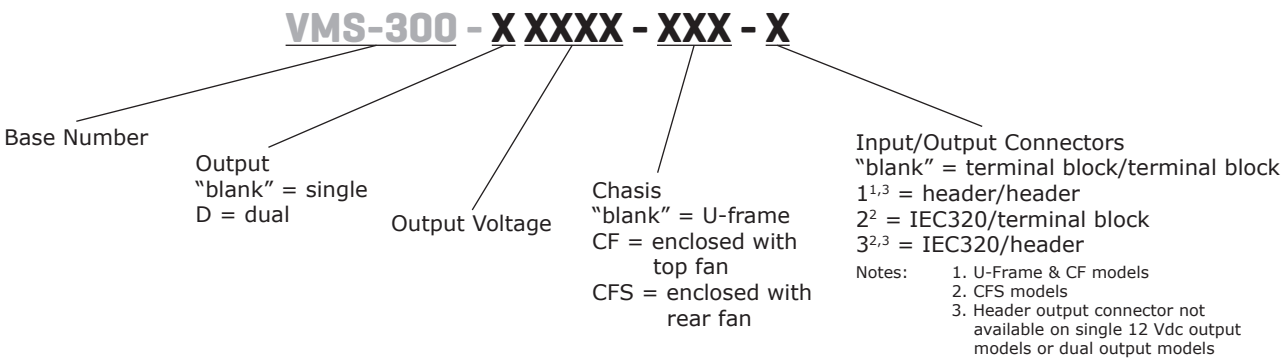

INPUT

parameter	conditions/description	min	typ	max	units
voltage		90		264	Vac
frequency		47		63	Hz
current	at 90 Vac, cold start			5	A
inrush current	at 115 Vac, cold start at 230 Vac, cold start			35 70	A A
power factor correction	single output models pass EN61000-3-2 Class D dual output models		-- 0.95		
leakage current	at 264 Vac			0.3	mA
input fuse	5 A / 250 V inserted in primary				
remote ON/OFF	designated as INH on pin 4 of CN3, requires a low signal to inhibit output				

OUTPUT

parameter	conditions/description	min	typ	max	units
load regulation	single output models dual output models		±1 ±5		% %
transient response	returns to within 1% in <2.5 ms for a 50% load change and the peak transient does not exceed 5%				
start-up time	at 230 Vac			1	s
hold-up time	at 120 Vac, 80% load	16			ms
adjustability	user adjustable		±5		%
switching frequency	PFC PWM PWM dual output models	50 65 45		70 75 55	kHz kHz kHz
fan drive	12 Vdc / 300 mA for external fan				
fan fail (FF)	designated as FF on pin 3 of CN3, open collector output rated for 28 Vdc/5 mA sink current max., goes high when a fan failure is detected				
power good (PG)	designated as PG on pin 1 of CN3, open collector, goes high 100-500 ms after DC regulation and goes low at least 1ms before loss of regulation				

PROTECTIONS

parameter	conditions/description	min	typ	max	units
over voltage protection	latch down and auto restart			130	%
over current protection	auto restart	110		140	%
short circuit protection	auto restart with no damage from a short on any output				
over temperature protection	auto restart		110		°C

SAFETY & COMPLIANCE

parameter	conditions/description	min	typ	max	units
isolation voltage	primary to secondary at 10 mA for 3 seconds primary to chassis at 10 mA for 3 seconds primary to core at 10 mA for 3 seconds	4,000 1,500 1,500			Vac Vac Vac
safety approvals	UL 60601-1, EN 60601-1, IEC 60601-1 (Edition 3.1)				
EMI/EMC	EN 60601-1-2 (4th Edition), EN 55011 Class B, EN 61000-3-(2,3), IEC 61000-4-(2,3,4,5,6,8,11)				
MTBF	as per MIL-HDBK-217F at 30°C	100,000			hours
RoHS	2011/65/EU				

ENVIRONMENTAL

parameter	conditions/description	min	typ	max	units
operating temperature	see derating curve	0		70	°C
storage temperature		-20		85	°C
operating humidity	non-condensing	5		90	%
storage humidity	non-condensing	5		95	%
vibration	5 ~ 50 Hz, acceleration ±7.35 m/s*s per axis				

CONNECTORS

parameter	conditions/description	
input connector (CN1)	U-frame and CF	Terminal Block: Howder M3 screws 3 pin 6.35 mm center Part No. HD-601-3P; PCB Labeling: L=Line; N=Neutral; G=Chassis Ground Header: CHYAO SHIUNN JS-1120-05 Mating: JST VHR-5N or equivalent (5 pin, 3 used)
	CFS	Terminal Block: Howder HD-602-3P Input plug: IEC320 Inlet
output connector (CN2)	single output models	Terminal block: Dinkle P830N, M5 screws Header: CHYAO SHIUNN JS-1120-06 Mating: JST VHR-6N or equivalent (6 pin)
	dual output models	Terminal block: Howder HD-816-3P, M3 screws
output pin assignment	single output models	Terminal block: Pin 1 = -V, Pin 2 = +V Header: Pins 1~3 = V-, Pins 4~6 = V+
	dual output models	Terminal block: Pin 1 = V2, Pin 2 = RTN, Pin 3 = V1
logical signal connector (CN3)	Mating JST XHP-4 or equivalent (CHYAO SHIUNN JS-2001-04); Mating Pins: JST SXH-002T-P0.6 FOR AWG 30 to 26	
fan driver connector (FAN1)	Mating connector is JST P/N XHP-3 (3 pins 0.98 pitch) or equivalent (CHYAO SHIUNN JS-2001-03)	

DERATING CURVE

TEMPERATURE DERATING CURVE

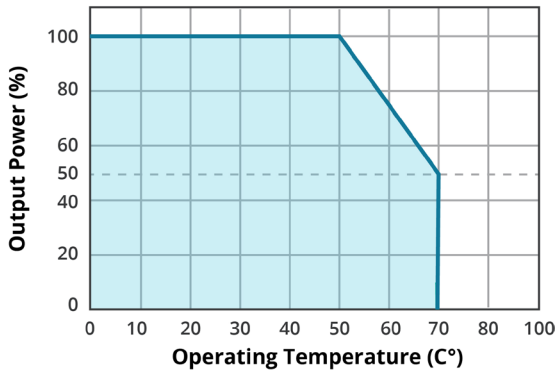

Single Output

U-Frame	at 300 W max. with 25 CFM forced air cooling, at 150 W max. convection
CF	up to 300 W max.
CFS	up to 300 W max.

Dual Output

U-Frame	at 240 W max. with 25 CFM forced air cooling, at 120 W max. convection
CF	up to 240 W max.
CFS	up to 240 W max.

MECHANICAL

parameter	conditions/description	min	typ	max	units
dimensions	U-Frame: 127 x 81.28 x 38.1 (5 x 3.2 x 1.5 inch) CF: 127 x 81.28 x 50.8 (5 x 3.2 x 2 inch) CFS: 165.1 x 81.28 x 40.64 (6.5 x 3.2 x 1.6 inch)				mm mm mm
weight	U-frame CF CFS			500 600 650	g g g

MECHANICAL DRAWING - SINGLE OUTPUT MODELS

U-FRAME

units: mm[inch]

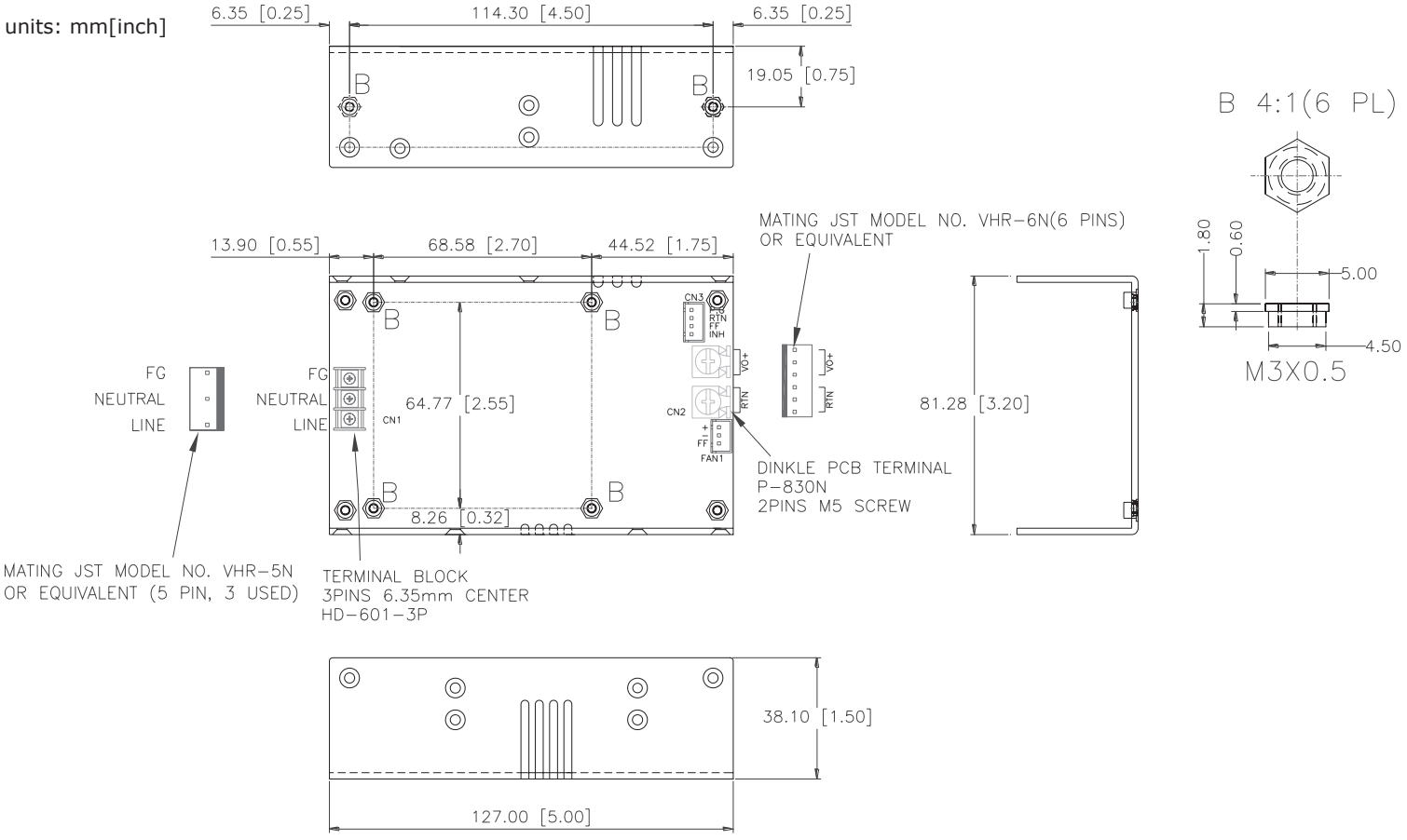

Note: 1. Mounting hole max screw depth is 4.0mm (M3x0.5 Inserts).

MECHANICAL DRAWING - SINGLE OUTPUT MODELS (CONTINUED)

CF

units: mm[inch]

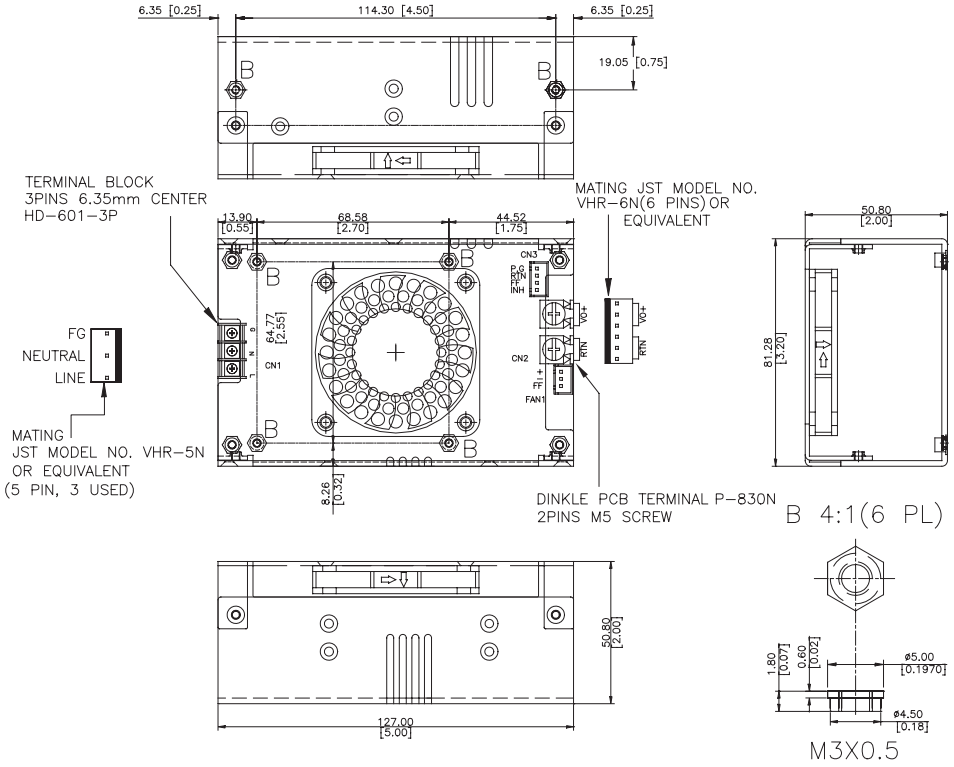

CFS

units: mm[inch]

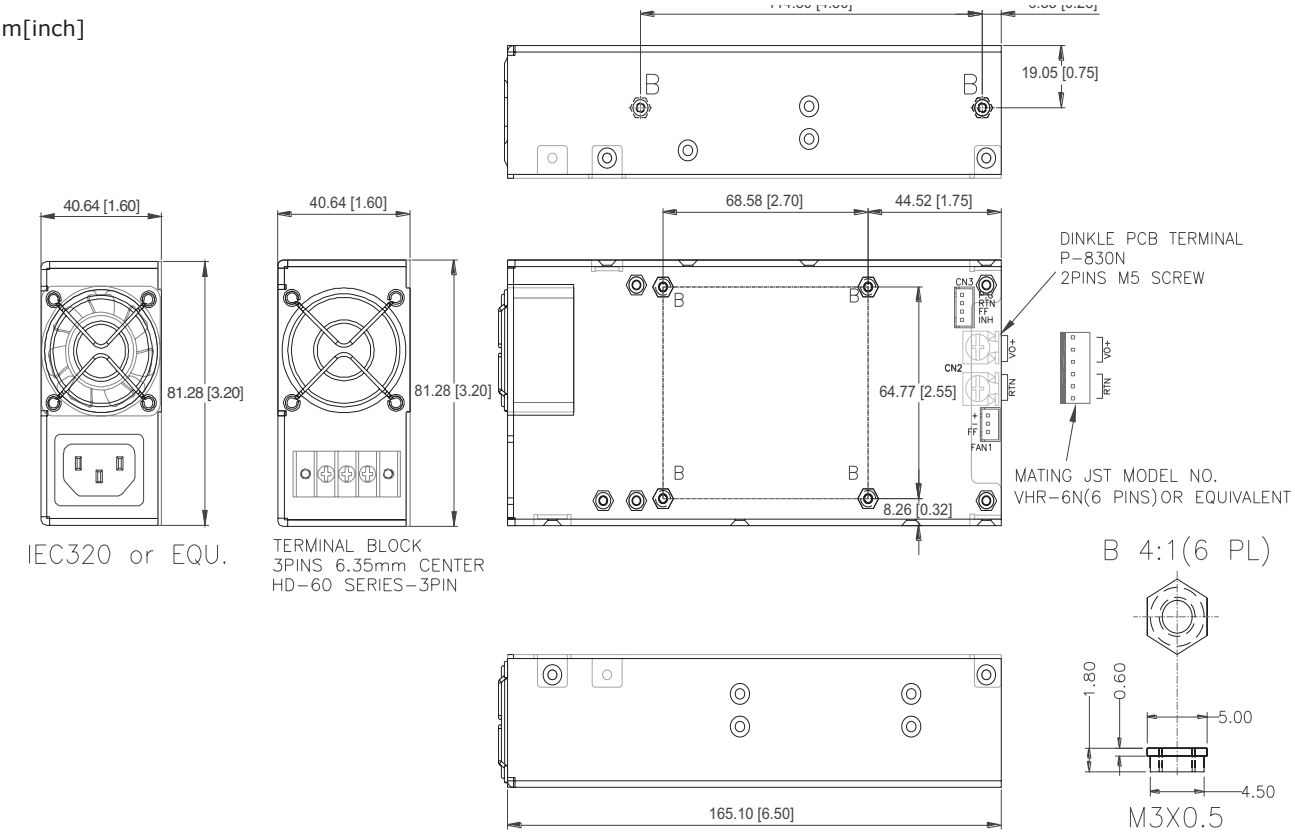

Note: 1. Mounting hole max screw depth is 4.0mm (M3x0.5 Inserts).

MECHANICAL DRAWING - DUAL OUTPUT MODELS

U-FRAME

units: mm[inch]

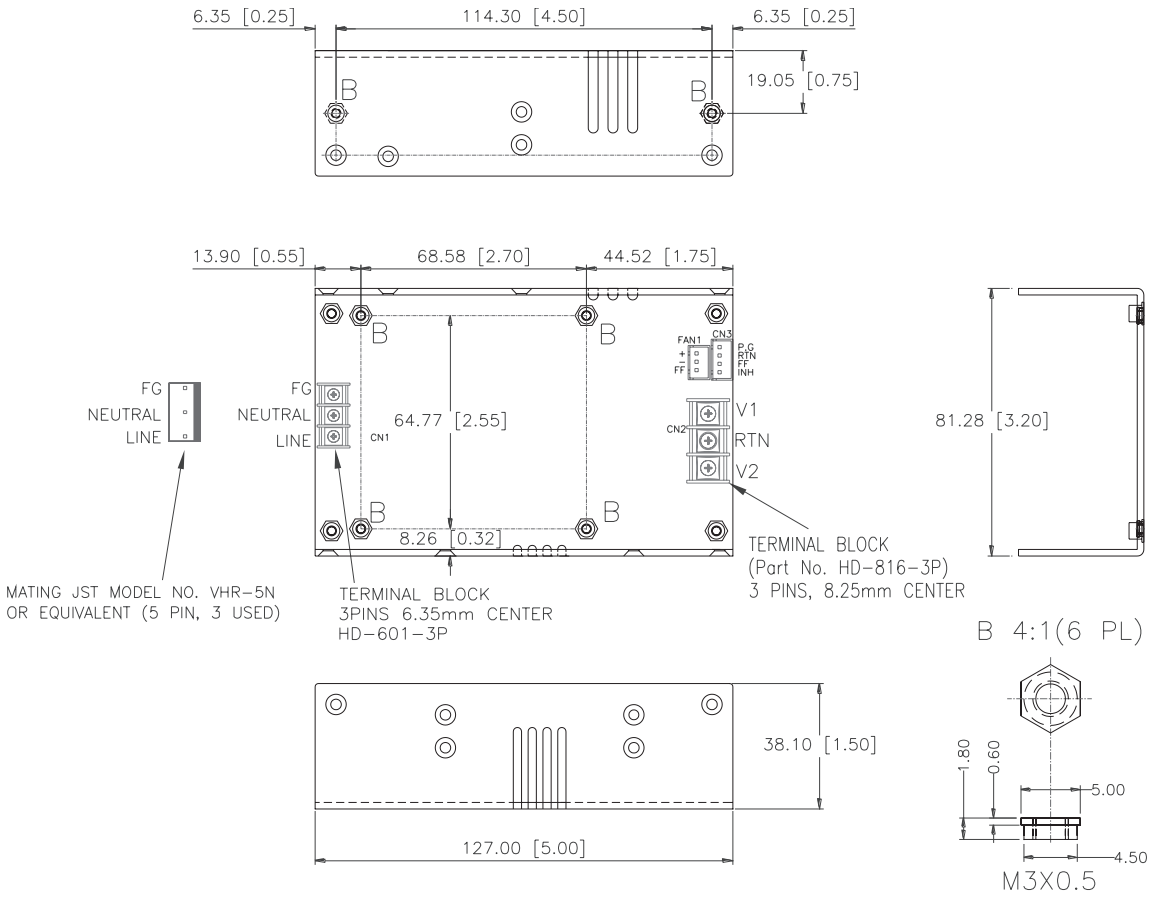

Note: 1. Mounting hole max screw depth is 4.0mm (M3x0.5 Inserts).

MECHANICAL DRAWING - DUAL OUTPUT MODELS (CONTINUED)

CF

units: mm[inch]

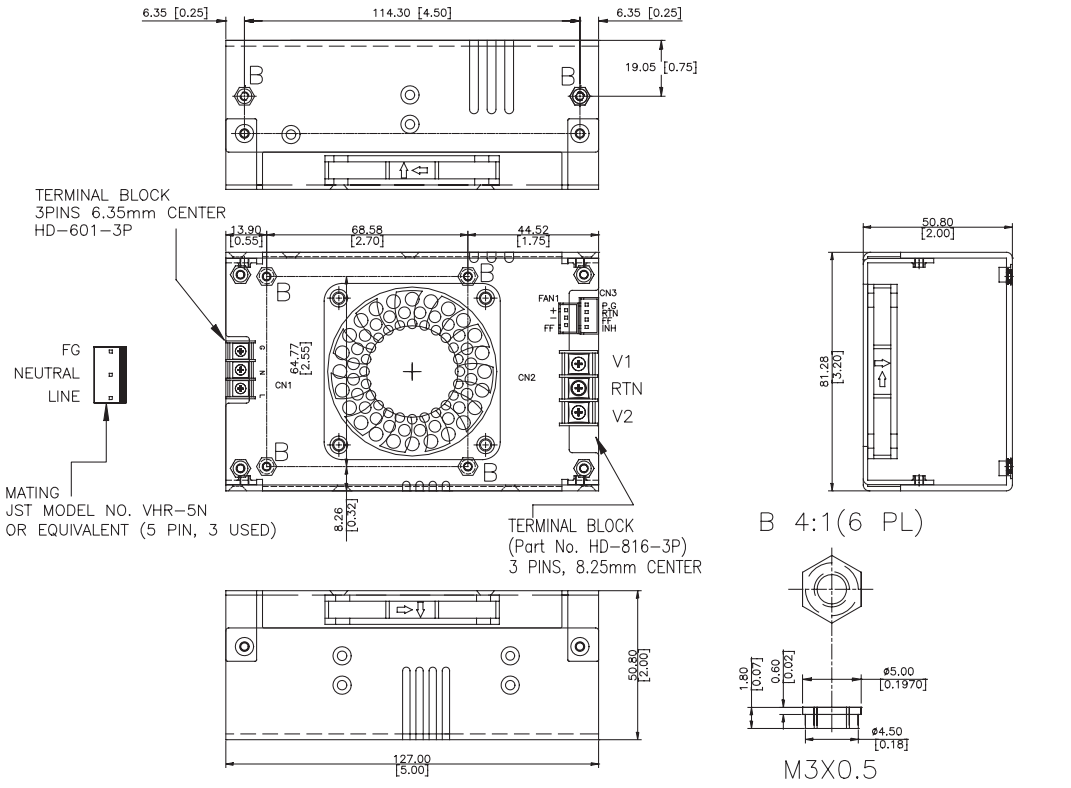

CFS

units: mm[inch]

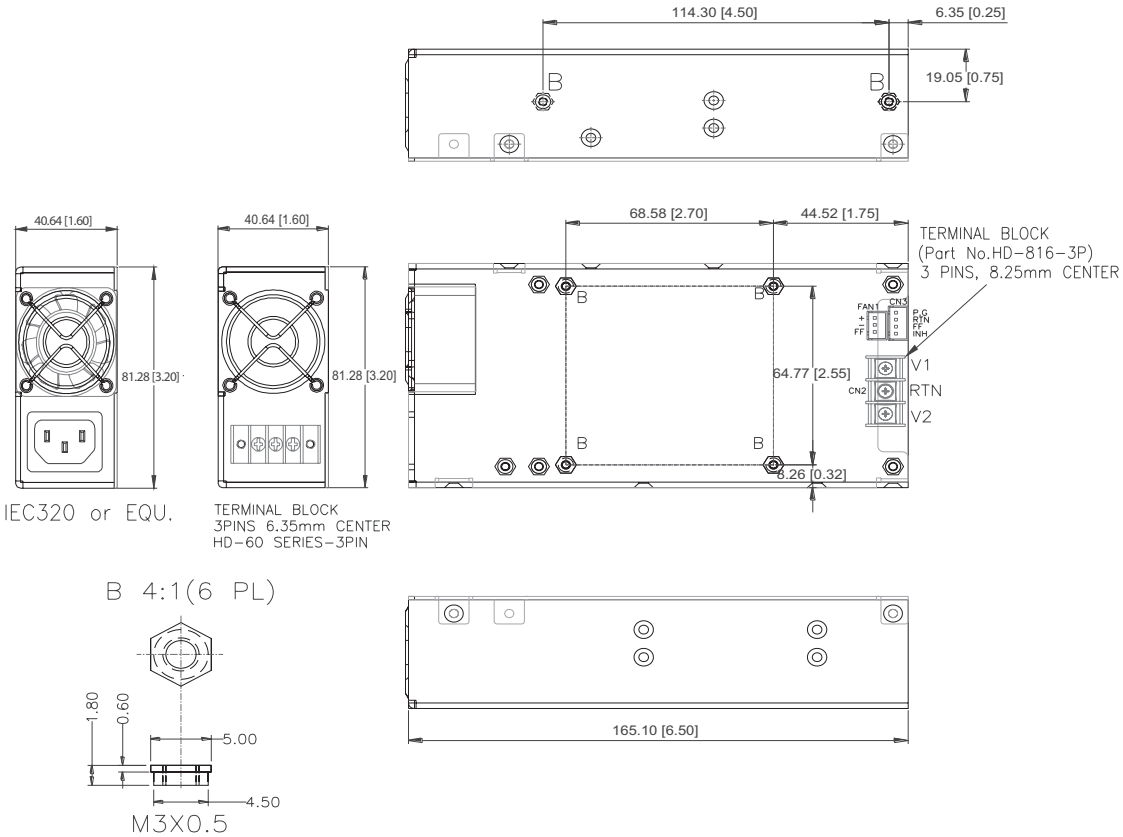

Note: 1. Mounting hole max screw depth is 4.0mm (M3x0.5 Inserts).

REVISION HISTORY

rev.	description	date
1.0	initial release	08/14/2012
1.01	updated part number key, derating curve, misc. updates	09/24/2012
1.02	updated spec	04/25/2013
1.03	updated spec	07/03/2013
1.04	removed connector options	08/05/2013
1.05	added connector options	10/21/2013
1.06	added 2 mounting holes for internal fan on "CF" models	04/23/2015
1.07	updated datasheet	05/05/2016
1.08	updated to safety Edition 3.1 and EMC 4th Edition	07/24/2018
1.09	company logo updated	12/17/2020
1.10	derating curve updated	05/05/2021
1.11	discontinued model VMS-300-D0512, VMS-300-D0512-CF & VMS-300-D0512-CFS	06/07/2022

The revision history provided is for informational purposes only and is believed to be accurate.

CUI INC
a bel group

Headquarters
20050 SW 112th Ave.
Tualatin, OR 97062
800.275.4899

Fax 503.612.2383
cui.com
techsupport@cui.com

CUI offers a two (2) year limited warranty. Complete warranty information is listed on our website.

CUI reserves the right to make changes to the product at any time without notice. Information provided by CUI is believed to be accurate and reliable. However, no responsibility is assumed by CUI for its use, nor for any infringements of patents or other rights of third parties which may result from its use.

CUI products are not authorized or warranted for use as critical components in equipment that requires an extremely high level of reliability. A critical component is any component of a life support device or system whose failure to perform can be reasonably expected to cause the failure of the life support device or system, or to affect its safety or effectiveness.