GlobTek, Inc.
www.globtek.com
186 Veterans Drive,
Northvale, NJ 07647
Tel. (201) 784-1000
Fax (201) 784-0111

Drawing Title: GTM46402-4015, Medical/ICT/ITE/Household use Power Supply, Efficiency Level: USA DOE Level VI / Eco-design Directive 2009/125/EC, (EU) 2019/1782, Case Color/Style: GlobTek Black, Wall Plug-in, Regulated Switchmode AC-DC Power Supply AC Adaptor, Input Rating: 100-240V~, 50-60 Hz, Interchangeable Blades, https://www.globtek.com/interchangeable-blades.php, Output Rating: 40.00W, 15.0V@2.66A, Pin Out: Center Positive (+V), symbol compliant with IEC 60417 symbol no. 5926, Output Configuration: 1200 mm, 16/2 Cond, UL 2468, Female Barrel 5.5*2.1*12mm with internal Spring Clip and Locking Notch or Equal, Ferrite: None, GlobTek Black, GT Cord # C70293, Blades/Input Cord: Q-Series Kit (4) Blades: Q-NA; Q-UK; Q-SAA; Q-EU, Approvals:
Model No. GTM46402-4015
Part No./Ordering No. WR9QG2667CCPNKITR6B — Rev A

In Addition to GlobTek Inc.'s renewed ISO9001:2015 - Quality Management System Certification, GlobTek Inc. is now certified to:

ISO13485:2016 - Medical Devices Quality Management System Certification
ISO14001:2015 - Environmental Management System Certification

ISO Certificates are available online at https://www.globtek.com/iso-certificates/

The acceptance of this specification and use of the product described in this document indicates the acceptance and binding of the customer to Globtek TERMS AND CONDITIONS (attached to the end of this document), which supersede all other agreements, terms, and conditions (https://www.globtek.com/terms-and-conditions/).

The purchaser of this product (Customer) agrees that it is their sole responsibility to determine suitability/fitness of the product described in this specification for their application and to take precautions for protection against any hazards attendant to the handling and use of the product.

Footnote:

GlobTek Inc. will not be liable for the safety and performance of these power supplies/battery packs if unauthorized access and repair occurs. End user should consult applicable UL, CSA or EN standards for proper installation instruction.

Limitation of Use:

GlobTek products are intended for use with commercial, medical, and/or industrial equipment only. GlobTek product are not authorized for use as mission critical components in life support hazardous environment, nuclear or aircraft applications without prior written approval from the CEO of GlobTek Inc.
Contents of this document are subject to change without prior notice.

Customer Approval of Specification:

Please approve, sign and send back to GlobTek so we can complete order processing.
A delay in receipt of this form will delay delivery schedule.

Company Name:	Customer P/N:
Quote Number:	Date:
Authorized Representative Name:	Authorized Representative Signature:

PROPRIETARY INFORMATION
PROPRIETARY OF GLOBTEK, INC. ANY REPRODUCTION, DISCLOSURE OR USE OF THIS DRAWING, IN WHOLE OR IN PART, IS HEREBY PROHIBITED EXCEPT AS SPECIFIED IN WRITING BY GLOBTEK, INC. © GlobTek, Inc. 2023 - 2024
guest / 05/29/2024 2:04:09 PM GMT CLONED FROM WR9QG2667CCPN(R6B)

GlobTek, Inc.
www.globtek.com
186 Veterans Drive,
Northvale, NJ 07647
Tel. (201) 784-1000
Fax (201) 784-0111

Drawing Title: GTM46402-4015, Medical/ICT/ITE/Household use Power Supply, Efficiency Level: USA DOE Level VI / Eco-design Directive 2009/125/EC, (EU) 2019/1782, Case Color/Style: GlobTek Black, Wall Plug-in, Regulated Switchmode AC-DC Power Supply AC Adaptor, Input Rating: 100-240V~, 50-60 Hz, Interchangeable Blades, https://www.globtek.com/interchangeable-blades.php, Output Rating: 40.00W, 15.0V@2.66A, Pin Out: Center Positive (+V), symbol compliant with IEC 60417 symbol no. 5926, Output Configuration: 1200 mm, 16/2 Cond, UL 2468, Female Barrel 5.5*2.1*12mm with internal Spring Clip and Locking Notch or Equal, Ferrite: None, GlobTek Black, GT Cord # C70293, Blades/Input Cord: Q-Series Kit (4) Blades: Q-NA; Q-UK; Q-SAA; Q-EU, Approvals:

Model No. GTM46402-4015

Part No./Ordering No. WR9QG2667CCPNKITR6B | Rev A

REVISION HISTORY

REV	DESCRIPTION	SUB	DATE	APPROVED
A	Initial release	QA	01/23/2023	QA

POWER SUPPLY INFORMATION

TYPE	Wall Plug-in
TECHNOLOGY	Regulated Switchmode AC-DC Power Supply AC Adaptor
CASE COLOR	GlobTek Black
NAMEPLATE RATED INPUT	100-240V~, 50-60 Hz, 1.0A
INPUT CONFIG	Interchangeable Blades
WATTS	40.00
VOLTS OUT	15.0
CURRENT OUT (Amps)	2.66
BLADE/CORD INCLUDED	Q-KIT(R) Q-Series Kit (4) Blades: Q-NA; Q-UK; Q-SAA; Q-EU
INGRESS PROTECTION	Indoor Use
GROUNDING CONFIGURATION	(F1) Floating output, Class II / double insulated
EFFICIENCY LEVEL	USA DOE Level VI / Eco-design Directive 2009/125/EC, (EU) 2019/1782
OUTPUT CONFIGURATION	1200 mm, 16/2 Cond, UL 2468, Female Barrel 5.5*2.1*12mm with internal Spring Clip and Locking Notch or Equal, Ferrite: None, GlobTek Black, GT Cord # C70293
OVERMOLDED	Yes
OUTPUT CONNECTOR GENDER	Female
CONNECTOR PIN OUT	Center Positive (+V), symbol compliant with IEC 60417 symbol no. 5926
LABEL SPECS	ISO 15223 medical device compliant label,L-1470
SPECIAL BARCODE LABEL MATERIAL	No
PACK SPEC	Standard WPI & 4 Blades, Individually Box PE 0.05*110*200, User manual
USER MANUAL	809-PSUQKITUSERMANUAL on A4 paper

PROPRIETARY INFORMATION
PROPRIETARY OF GLOBTEK, INC. ANY REPRODUCTION, DISCLOSURE OR USE OF THIS DRAWING, IN WHOLE OR IN PART, IS HEREBY PROHIBITED EXCEPT AS SPECIFIED IN WRITING BY GLOBTEK, INC. © GlobTek, Inc. 2023 - 2024
guest / 05/29/2024 2:04:09 PM GMT CLONED FROM WR9QG2667CCPN(R6B)

GlobTek, Inc.
www.globtek.com
186 Veterans Drive,
Northvale, NJ 07647
Tel. (201) 784-1000
Fax (201) 784-0111

Drawing Title: GTM46402-4015, Medical/ICT/ITE/Household use Power Supply, Efficiency Level: USA DOE Level VI / Eco-design Directive 2009/125/EC, (EU) 2019/1782, Case Color/Style: GlobTek Black, Wall Plug-in, Regulated Switchmode AC-DC Power Supply AC Adaptor, Input Rating: 100-240V~, 50-60 Hz, Interchangeable Blades, https://www.globtek.com/interchangeable-blades.php, Output Rating: 40.00W, 15.0V@2.66A, Pin Out: Center Positive (+V), symbol compliant with IEC 60417 symbol no. 5926, Output Configuration: 1200 mm, 16/2 Cond, UL 2468, Female Barrel 5.5*2.1*12mm with internal Spring Clip and Locking Notch or Equal, Ferrite: None, GlobTek Black, GT Cord # C70293, Blades/Input Cord: Q-Series Kit (4) Blades: Q-NA; Q-UK; Q-SAA; Q-EU, Approvals:	
Model No. GTM46402-4015	
Part No./Ordering No. WR9QG2667CCPNKITR6B	Rev A

Notes/Modifications/Customizations (notes in this section supersede the values shown in the standard spec)

DIMENSIONS ARE IN MM UNLESS SPECIFIED OTHERWISE

PROPRIETARY INFORMATION

PROPRIETARY OF GLOBTEK, INC. ANY REPRODUCTION, DISCLOSURE OR USE OF THIS DRAWING, IN WHOLE OR IN PART, IS HEREBY PROHIBITED EXCEPT AS SPECIFIED IN WRITING BY GLOBTEK, INC. © GlobTek, Inc. 2023 - 2024

guest / 05/29/2024 2:04:09 PM GMT CLONED FROM WR9QG2667CCPN(R6B)

ELECTRICAL SPECIFICATIONS

A) ELECTRICAL SPECIFICATIONS:

01. Input Voltage: Specified 90-264 Vac, Nameplate rated: 100-240Vac
    90-264 Vac range @ 100% of rated load current
    85-264 Vac range @ 85% of rated load current
    110-370 VDC range @ 100% of rated load current
02. Input Frequency: Specified 47-63 Hz, Nameplate rated 50-60Hz
03. Output Regulation: +/- 5% measured at the output connector
04. Line Voltage Regulation: +/- 0.5% typical measured at full load
05. Output Ripple (Vp-p): 1% or 100 mV whichever is greater, measured at 20 MHz bandwidth with 0.1 uf ceramic capacitor in parallel with a low impedance 47 uf electrolytic capacitor connected at the end of the output connector
06. Turn-ON/OFF Overshoot: 5% maximum, 1 mS typical recovery time for 40% to 70% step load
07. Turn-ON Delay: 1 second maximum @ full load, nominal line
08. Hold-Up Time: 8 mS typical @ nominal input voltage and full load
09. Inrush Current: 30A/60A maximum cold start @ 115/230Vac input
10. Efficiency: Compliant with Efficiency Level VI and CoC Tier 2 standards
11. No Load Standby Power: <0.075 W @ 230Vac

B) PROTECTION

01. Input Protection: Input line fusing and 300Vac MOV
02. Short Circuit/ Overload: Electronically Protected unit will auto recover upon removal of fault
    Output Current Limit: 110% to 160% of rated output current
    (upper end of current limit range is determined by normal output power rating,
    not derated output power level)
03. Output Over-Voltage: 110% to 130% of nominal output voltage

C) SAFETY

01. Dielectric Withstand Voltage: 4000Vac or 5656Vdc from input to output
02. Earth Leakage Current: N/A for Class II models
03. Touch Current: < 95uA
04. Means of Protection for Medical Standard: 2 x MOPP
05. Compliant Standards: See listings at end of this drawing for specifics

D) EMC

01. Emissions, per EN 55032, EN 61000-6-3, EN 61000-6-4
    Conducted Emissions: Class B, FCC Part 15, Class B
    Radiated Emissions: Class B, FCC Part 15, Class B
02. Line Frequency Harmonics EN61000-3-2, Class A
03. Voltage Fluctuations/Flicker EN61000-3-3
04. Immunity, per EN 55024, EN 61000-6-1, EN 61000-6-2
    Static Discharge Immunity EN61000-4-2, 8kV Contact Discharge, 15kV air discharge
    Radiated RF Immunity EN61000-4-3, 3V/m 80-2700MHz, 80% 1KHz AM.
    EFT/Burst Immunity EN61000-4-4, 2kV/100kHz.
    Line Surge Immunity EN61000-4-5, 1kV differential, 2kV common-mode
    Conducted RF Immunity EN61000-4-6, 3Vrms, 80% 1KHz AM
    Power Frequency Magnetic Field Immunity EN61000-4-8, NA

PROPRIETARY INFORMATION
PROPRIETARY OF GLOBTEK, INC. ANY REPRODUCTION, DISCLOSURE OR USE OF THIS DRAWING, IN WHOLE OR IN PART, IS HEREBY PROHIBITED EXCEPT AS SPECIFIED IN WRITING BY GLOBTEK, INC. © GlobTek, Inc. 2023 - 2024
guest / 05/29/2024 2:04:09 PM GMT CLONED FROM WR9QG2667CCPN(R6B)

Voltage Dip Immunity EN61000-4-11, Criteria

E) OTHER:

01. MTBF: 1,000,000 Hours @ 40°C ambient temperature, Full Load
    Projected failure rate expected to be < 0.5% after 5 years, < 3 % after 10 years
02. Operating Temperature: -20°C to 40°C ambient temperature at full load, -40°C to 50°C ambient temperature with derating to 80% load
03. Operating Humidity: 0% to 95% relative humidity, non-condensing
04. Storage Temperature: -40°C to 80°C
05. Operating Altitude: 5000 Meters for IEC 62368-1 and IEC 60335-1. 3000M for IEC 60601-1
06. Ingress Protection: IP40 standard, IP52 available as special option
07. ROHS: Compliant with latest regulations, see approvals section below

F) ENCLOSURE

01. Housing: High impact plastic, 94V0 polycarbonate, non-vented
02. Markings: Label or Laser Printed
03. AC Input mechanical: Replaceable, Class II Wall Plug-in attachments

G) SPECIAL OPTIONS

02. Custom Cordsets, various cordage types, and connector types*
03. Custom Markings
06. Tightened output voltage tolerance
07. Reduced output ripple level
08. Reduced output power rating marking
09. High Rel PCB laminate with Plated through Holes for IPC610 Class 2 Compliance

PROPRIETARY INFORMATION

PROPRIETARY OF GLOBTEK, INC. ANY REPRODUCTION, DISCLOSURE OR USE OF THIS DRAWING, IN WHOLE OR IN PART, IS HEREBY PROHIBITED EXCEPT AS SPECIFIED IN WRITING BY GLOBTEK, INC. © GlobTek, Inc. 2023 - 2024

guest / 05/29/2024 2:04:09 PM GMT CLONED FROM WR9QG2667CCPN(R6B)

10. Special Housing Colors and Cordset Colors

TO ADDRESS SYSTEM-LEVEL EMI CONCERNS, FERRITE CHOKES/BEADS MAY BE ADDED/REVISED UPON REQUEST. A SAMPLE KIT OF GLOBTEK'S STANDARD FERRITES IS AVAILABLE UNDER GLOBTEK P/N: EMI-MITIGATION-KIT1

FOR ADDITIONAL INFORMATION, PLEASE READ OUR WHITE PAPER AT: https://r.globtek.info/3QeaqtD

INGRESS PROTECTION: Indoor Use

PROPRIETARY INFORMATION

PROPRIETARY OF GLOBTEK, INC. ANY REPRODUCTION, DISCLOSURE OR USE OF THIS DRAWING, IN WHOLE OR IN PART, IS HEREBY PROHIBITED EXCEPT AS SPECIFIED IN WRITING BY GLOBTEK, INC. © GlobTek, Inc. 2023 - 2024

guest / 05/29/2024 2:04:09 PM GMT CLONED FROM WR9QG2667CCPN(R6B)

GlobTek, Inc. www.globtek.com 186 Veterans Drive, Northvale, NJ 07647 Tel. (201) 784-1000 Fax (201) 784-0111	Drawing Title: GTM46402-4015, Medical/ICT/ITE/Household use Power Supply, Efficiency Level: USA DOE Level VI / Eco-design Directive 2009/125/EC, (EU) 2019/1782, Case Color/Style: GlobTek Black, Wall Plug-in, Regulated Switchmode AC-DC Power Supply AC Adaptor, Input Rating: 100-240V~, 50-60 Hz, Interchangeable Blades, https://www.globtek.com/interchangeable-blades.php, Output Rating: 40.00W, 15.0V@2.66A, Pin Out: Center Positive (+V), symbol compliant with IEC 60417 symbol no. 5926, Output Configuration: 1200 mm, 16/2 Cond, UL 2468, Female Barrel 5.5*2.1*12mm with internal Spring Clip and Locking Notch or Equal, Ferrite: None, GlobTek Black, GT Cord # C70293, Blades/Input Cord: Q-Series Kit (4) Blades: Q-NA; Q-UK; Q-SAA; Q-EU, Approvals:	
	Model No. GTM46402-4015	
	Part No./Ordering No. WR9QG2667CCPNKITR6B	Rev A

3D File Download https://www.globtek.com/file/dl/gtm46402-40vv-x_x-q_asm.stp

Mechanical drawing

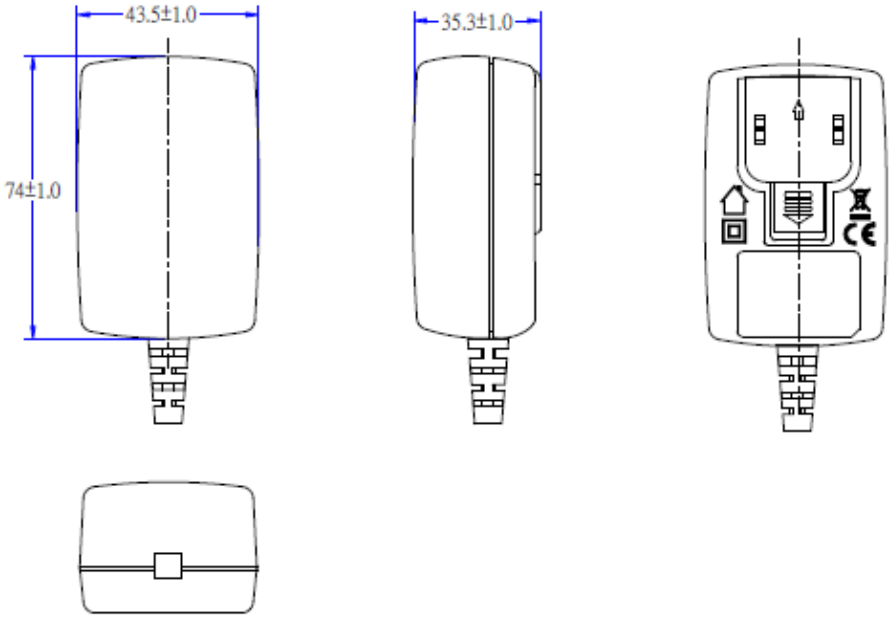

PROPRIETARY INFORMATION
PROPRIETARY OF GLOBTEK, INC. ANY REPRODUCTION, DISCLOSURE OR USE OF THIS DRAWING, IN WHOLE OR IN PART, IS HEREBY PROHIBITED EXCEPT AS SPECIFIED IN WRITING BY GLOBTEK, INC. © GlobTek, Inc. 2023 - 2024
guest / 05/29/2024 2:04:09 PM GMT CLONED FROM WR9QG2667CCPN(R6B)

GlobTek, Inc.
www.globtek.com
186 Veterans Drive,
Northvale, NJ 07647
Tel. (201) 784-1000
Fax (201) 784-0111

Drawing Title: GTM46402-4015, Medical/ICT/ITE/Household use Power Supply, Efficiency Level: USA DOE Level VI / Eco-design Directive 2009/125/EC, (EU) 2019/1782, Case Color/Style: GlobTek Black, Wall Plug-in, Regulated Switchmode AC-DC Power Supply AC Adaptor, Input Rating: 100-240V~, 50-60 Hz, Interchangeable Blades, https://www.globtek.com/interchangeable-blades.php, Output Rating: 40.00W, 15.0V@2.66A, Pin Out: Center Positive (+V), symbol compliant with IEC 60417 symbol no. 5926, Output Configuration: 1200 mm, 16/2 Cond, UL 2468, Female Barrel 5.5*2.1*12mm with internal Spring Clip and Locking Notch or Equal, Ferrite: None, GlobTek Black, GT Cord # C70293, Blades/Input Cord: Q-Series Kit (4) Blades: Q-NA; Q-UK; Q-SAA; Q-EU, Approvals:

Model No. GTM46402-4015

Part No./Ordering No. WR9QG2667CCPNKITR6B | Rev A

DERATING CURVE

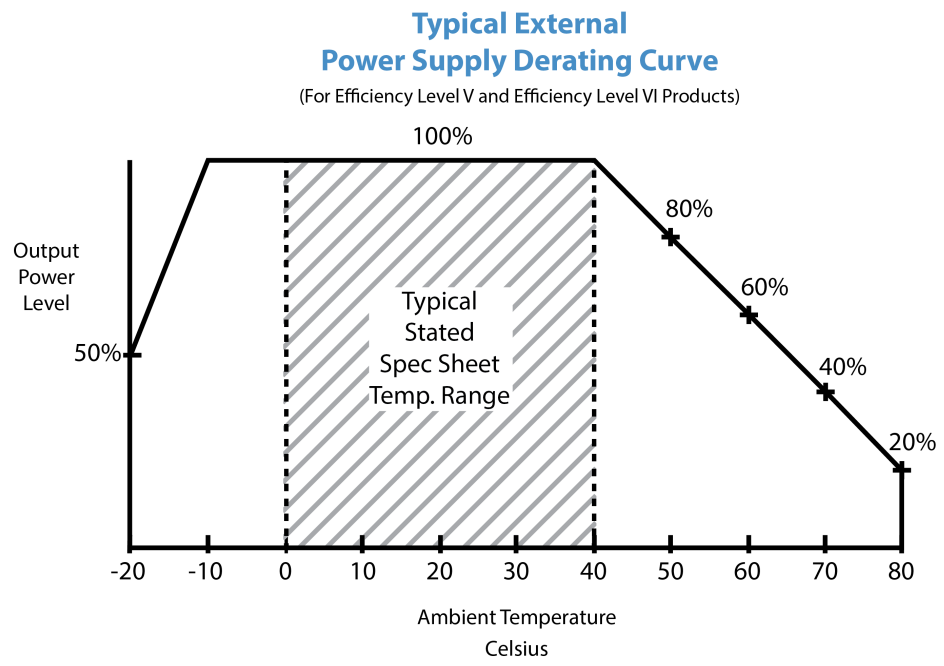

PROPRIETARY INFORMATION
PROPRIETARY OF GLOBTEK, INC. ANY REPRODUCTION, DISCLOSURE OR USE OF THIS DRAWING, IN WHOLE OR IN PART, IS HEREBY PROHIBITED EXCEPT AS SPECIFIED IN WRITING BY GLOBTEK, INC. © GlobTek, Inc. 2023 - 2024
guest / 05/29/2024 2:04:09 PM GMT CLONED FROM WR9QG2667CCPN(R6B)

GlobTek, Inc.
www.globtek.com
186 Veterans Drive,
Northvale, NJ 07647
Tel. (201) 784-1000
Fax (201) 784-0111

Drawing Title: GTM46402-4015, Medical/ICT/ITE/Household use Power Supply, Efficiency Level: USA DOE Level VI / Eco-design Directive 2009/125/EC, (EU) 2019/1782, Case Color/Style: GlobTek Black, Wall Plug-in, Regulated Switchmode AC-DC Power Supply AC Adaptor, Input Rating: 100-240V~, 50-60 Hz, Interchangeable Blades, https://www.globtek.com/interchangeable-blades.php, Output Rating: 40.00W, 15.0V@2.66A, Pin Out: Center Positive (+V), symbol compliant with IEC 60417 symbol no. 5926, Output Configuration: 1200 mm, 16/2 Cond, UL 2468, Female Barrel 5.5*2.1*12mm with internal Spring Clip and Locking Notch or Equal, Ferrite: None, GlobTek Black, GT Cord # C70293, Blades/Input Cord: Q-Series Kit (4) Blades: Q-NA; Q-UK; Q-SAA; Q-EU, Approvals:	
Model No. GTM46402-4015	
Part No./Ordering No. WR9QG2667CCPNKITR6B	Rev A

INPUT CONFIGURATION

(F1) Floating output, Class II / double insulated

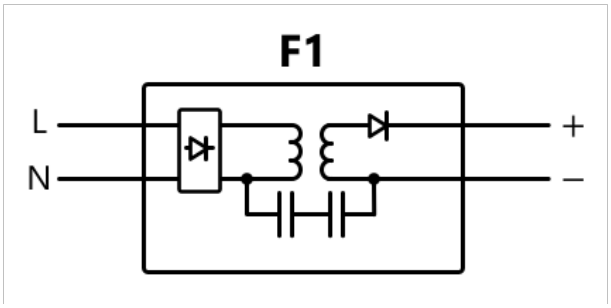

Alternate grounding configurations available upon request.

Blades/Cord Included:Q-KIT(R):Q-Series Kit (4) Blades: Q-NA; Q-UK; Q-SAA; Q-EU

Q Blades (Interchangeable)
Blade Options for Q Series Wall Plug-in Power Supplies

Data Sheet: http://en.globtek.com/interchangeable-blades.php

Insertion Instructions: http://www.globtek.com/pdf/Instructions-Interchangeable-Blades.pdf

Video: Q-Blade Style Instruction Video

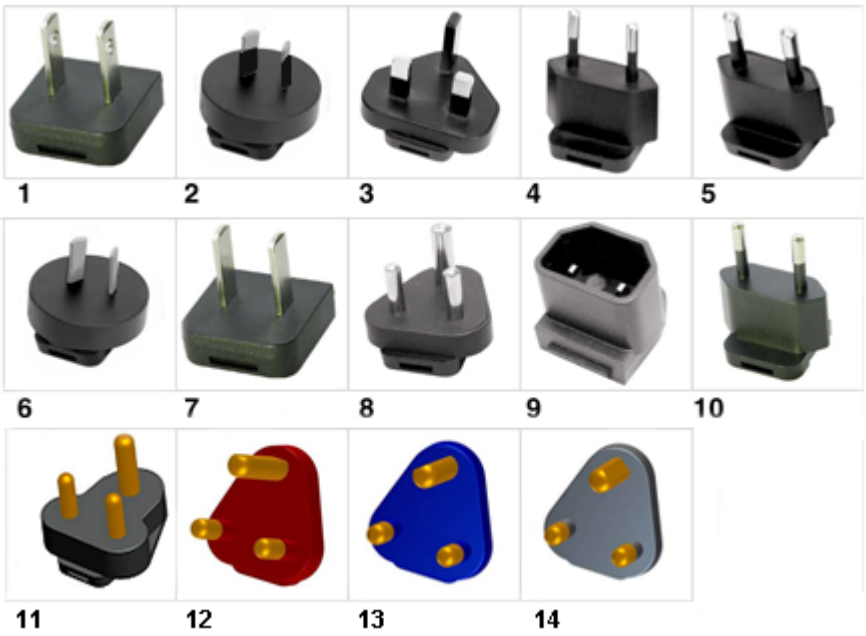

PROPRIETARY INFORMATION
PROPRIETARY OF GLOBTEK, INC. ANY REPRODUCTION, DISCLOSURE OR USE OF THIS DRAWING, IN WHOLE OR IN PART, IS HEREBY PROHIBITED EXCEPT AS SPECIFIED IN WRITING BY GLOBTEK, INC. © GlobTek, Inc. 2023 - 2024
guest / 05/29/2024 2:04:09 PM GMT CLONED FROM WR9QG2667CCPN(R6B)

INPUT CONNECTOR: Q-Socket (below are available blades configurations which are "not included" (unless stated above); can be purchased separately, package with power supply or as a separate "Q-KIT" if specified

01. United States / Canada / Japan NEMA 1-15P/ IEC PLUG Type A [WORKS IN PLUG B] configuration: NA 2 blades, Class II; US/CA/JP P/N: Q-NA(R)
02. Australian AS 3112 configuration: SAA 2 blade/ IEC TYPE I, Class II; AU P/N: Q-SAA(R)
03. UK BS 1363 configuration: UK 3 blade with dummy Ground/ IEC TYPE G, Class II; GB P/N: Q-UK(R)
04. European CEE 7/16 configuration: Europlug 2 pins/ IEC TYPE C [WORKS IN TYPE E&F], Class II; EU P/N: Q-EU(R)
05. Korean KS C8305 configuration: 2 pins/SIMILAR TO IEC TYPE C, Class II; KR P/N: Q-KR(R)
06. Argentina IRAM 2073 configuration: 2 blades/SIMILAR TO IEC TYPE I; AR P/N: Class II Q-AR(R)
07. China GB 2099 configuration: 2 blades/SIMILAR TO TYPE A, Class II; CN P/N:Q-CN(R)
08. India IS 1293 6A/BS546 configuration: 5A, 3 pins with Dummy Ground, Class II/IEC TYPE D; IN P/N: Q-IN(R)
09. IEC60320/C18 Inlet, Class II; P/N: Q-C18(R)
10. Brazilian NBR6147 configuration: 2 pins, Class II;SIMILAR TO IEC TYPE C BR P/N: Q-BR(R)
11. South Africa SABS164-1 and India IS 1293, IS694, 16A type plug, 3 round prongs, Class II + dummy ground, IEC TYPE M P/N: Q-SANS164-1-16A(R)
12. South Africa SABS164-4, 3 round prongs with a notched prong @ 0º, Class II + dummy ground, IEC TYPE M Red, P/N:
Q-SANS164-4C-16A(R)
13. South Africa SABS164-4, 3 round prongs with a notched prong @ -53º, Class II + dummy ground, Blue, IEC TYPE M, P/N:
Q-SANS164-4L-16A(R)
14. South Africa SABS164-4, 3 round prongs with a notched prong @ +53º, Class II + dummy ground, Black,IEC TYPE M P/N:
Q-SANS164-4R-16A(R)

Kits

01. Q-KIT: 1,2,3,4 above
02. Q-KIT-INTL: 2,3,4 above
03. Q-KIT-6: 1,2,3,4,5,6 above
04. Q-KIT-7: 1,2,3,4,5,6,7 above
05. Q-KIT-8: 1,2,3,4,5,6,7,8 above

PROPRIETARY INFORMATION
PROPRIETARY OF GLOBTEK, INC. ANY REPRODUCTION, DISCLOSURE OR USE OF THIS DRAWING, IN WHOLE OR IN PART, IS HEREBY PROHIBITED EXCEPT AS SPECIFIED IN WRITING BY GLOBTEK, INC. © GlobTek, Inc. 2023 - 2024
guest / 05/29/2024 2:04:09 PM GMT CLONED FROM WR9QG2667CCPN(R6B)

GlobTek, Inc.
www.globtek.com
186 Veterans Drive,
Northvale, NJ 07647
Tel. (201) 784-1000
Fax (201) 784-0111

Drawing Title: GTM46402-4015, Medical/ICT/ITE/Household use Power Supply, Efficiency Level: USA DOE Level VI / Eco-design Directive 2009/125/EC, (EU) 2019/1782, Case Color/Style: GlobTek Black, Wall Plug-in, Regulated Switchmode AC-DC Power Supply AC Adaptor, Input Rating: 100-240V~, 50-60 Hz, Interchangeable Blades, https://www.globtek.com/interchangeable-blades.php, Output Rating: 40.00W, 15.0V@2.66A, Pin Out: Center Positive (+V), symbol compliant with IEC 60417 symbol no. 5926, Output Configuration: 1200 mm, 16/2 Cond, UL 2468, Female Barrel 5.5*2.1*12mm with internal Spring Clip and Locking Notch or Equal, Ferrite: None, GlobTek Black, GT Cord # C70293, Blades/Input Cord: Q-Series Kit (4) Blades: Q-NA; Q-UK; Q-SAA; Q-EU, Approvals:

Model No. GTM46402-4015

Part No./Ordering No. WR9QG2667CCPNKITR6B Rev A

OUTPUT CORD AND CONNECTOR: C2L/C70293

ACTUAL CONNECTORS, OVERMOLDS, FERRITES MAY VARY SLIGHTLY FROM THE PICTURE BELOW

CABLE TYPE	UL 2468
CABLE LENGTH (mm)	1200
CABLE TOLERANCE (mm)	+100-0
WIRE GAUGE (AWG)	16
CONDUCTORS	2
HANK DIMENSION (mm)	90 ± 10
CABLE / CONNECTOR OVERMOLD COLOR	GlobTek Black
FERRITE TYPE AND DIMENSION	None
FERRITE NUMBER OF TURNS(Definition)	N/A
FERRITE DIMENSION FROM STRAIN RELIEF	N/A
FERRITE DIMENSION FROM PLUG	N/A
PLUG TYPE	Female Barrel 5.5*2.1*12mm with internal Spring Clip and Locking Notch or Equal
OUTPUT CONNECTOR GENDER	Female
OVERMOLDED	Yes
OVER MOLD ORIENTATION	Straight
CONNECTOR PIN OUT	Center Positive (+V), symbol compliant with IEC 60417 symbol no. 5926

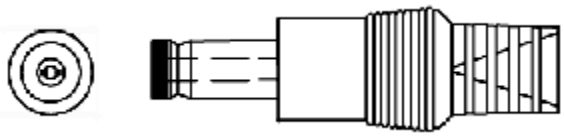

ADDITIONAL OUTPUT PLUG OPTIONS ARE AVAILABLE AT https://www.globtek.com/en/connectors
STANDARD PLUGS AND CONNECTORS CAN BE SEEN ONLINE AT https://www.globtek.com/en/connectors
CALCULATE VOLTAGE REGULATION/DROP WITH OUR ONLINE CALCULATOR: https://www.globtek.com/r2/PtqjjL

PROPRIETARY INFORMATION
PROPRIETARY OF GLOBTEK, INC. ANY REPRODUCTION, DISCLOSURE OR USE OF THIS DRAWING, IN WHOLE OR IN PART, IS HEREBY PROHIBITED EXCEPT AS SPECIFIED IN WRITING BY GLOBTEK, INC. © GlobTek, Inc. 2023 - 2024
guest / 05/29/2024 2:04:09 PM GMT CLONED FROM WR9QG2667CCPN(R6B)

GlobTek, Inc.
www.globtek.com
186 Veterans Drive,
Northvale, NJ 07647
Tel. (201) 784-1000
Fax (201) 784-0111

Drawing Title: GTM46402-4015, Medical/ICT/ITE/Household use Power Supply, Efficiency Level: USA DOE Level VI / Eco-design Directive 2009/125/EC, (EU) 2019/1782, Case Color/Style: GlobTek Black, Wall Plug-in, Regulated Switchmode AC-DC Power Supply AC Adaptor, Input Rating: 100-240V~, 50-60 Hz, Interchangeable Blades, https://www.globtek.com/interchangeable-blades.php, Output Rating: 40.00W, 15.0V@2.66A, Pin Out: Center Positive (+V), symbol compliant with IEC 60417 symbol no. 5926, Output Configuration: 1200 mm, 16/2 Cond, UL 2468, Female Barrel 5.5*2.1*12mm with internal Spring Clip and Locking Notch or Equal, Ferrite: None, GlobTek Black, GT Cord # C70293, Blades/Input Cord: Q-Series Kit (4) Blades: Q-NA; Q-UK; Q-SAA; Q-EU, Approvals:	
Model No. GTM46402-4015	
Part No./Ordering No. WR9QG2667CCPNKITR6B	Rev A

OUTPUT CONNECTOR HOOK UP

TO ADDRESS SYSTEM-LEVEL EMI CONCERNS, FERRITE CHOKES/BEADS MAY BE ADDED/REVISED UPON REQUEST. A SAMPLE KIT OF GLOBTEK'S STANDARD FERRITES IS AVAILABLE UNDER GLOBTEK P/N: EMI-MITIGATION-KIT1

FOR ADDITIONAL INFORMATION, PLEASE READ OUR WHITE PAPER AT:
https://www.globtek.com/en/technical-articles/ferrite-kit-radiated-emi-suppression-kit-for-globtek-power-supplies-cable-assemblies

PROPRIETARY INFORMATION
PROPRIETARY OF GLOBTEK, INC. ANY REPRODUCTION, DISCLOSURE OR USE OF THIS DRAWING, IN WHOLE OR IN PART, IS HEREBY PROHIBITED EXCEPT AS SPECIFIED IN WRITING BY GLOBTEK, INC. © GlobTek, Inc. 2023 - 2024
guest / 05/29/2024 2:04:09 PM GMT CLONED FROM WR9QG2667CCPN(R6B)

GlobTek, Inc.
www.globtek.com
186 Veterans Drive,
Northvale, NJ 07647
Tel. (201) 784-1000
Fax (201) 784-0111

Drawing Title: GTM46402-4015, Medical/ICT/ITE/Household use Power Supply, Efficiency Level: USA DOE Level VI / Eco-design Directive 2009/125/EC, (EU) 2019/1782, Case Color/Style: GlobTek Black, Wall Plug-in, Regulated Switchmode AC-DC Power Supply AC Adaptor, Input Rating: 100-240V~, 50-60 Hz, Interchangeable Blades, https://www.globtek.com/interchangeable-blades.php, Output Rating: 40.00W, 15.0V@2.66A, Pin Out: Center Positive (+V), symbol compliant with IEC 60417 symbol no. 5926, Output Configuration: 1200 mm, 16/2 Cond, UL 2468, Female Barrel 5.5*2.1*12mm with internal Spring Clip and Locking Notch or Equal, Ferrite: None, GlobTek Black, GT Cord # C70293, Blades/Input Cord: Q-Series Kit (4) Blades: Q-NA; Q-UK; Q-SAA; Q-EU, Approvals:	
Model No. GTM46402-4015	
Part No./Ordering No. WR9QG2667CCPNKITR6B	Rev A

LABEL:L-1470

LABEL P/N	ISO 15223 medical device compliant label
MATERIAL	Flat Thermal Transfer, Imprintable, Polyester Label and/or Pad Printed and/or Molded, and/or Laser Engraved in the case
BACKGROUND COLOR	Black if housing is Black, White or Silver if housing is White or Gray.
TEXT COLOR	White or Silver if label is Black Background for Black housing. Black if label is White or Silver background and Housing is White or Gray.
LABEL WIDTH (mm)	30
LABEL HEIGHT (mm)	21
SPECIAL BARCODE LABEL MATERIAL	No

Below is the minimum information which will appear on the label. NOTE: in the logo area additional/actual positioning of symbols and text is subjected to change as per agency updates/requirements or additional model approvals become available.
Agency logos may be in Regulatory Certifications/Label Markings area on the label or molded into the case housing outside the label area. Information will be shown via Label and/or Pad Printed and/or Molded in the case.

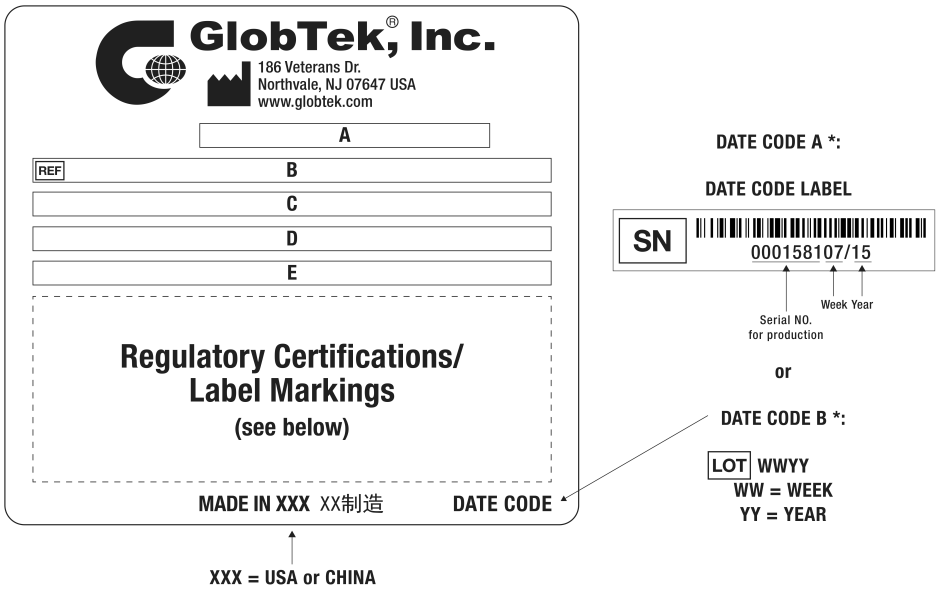

A=Medical/ICT/ITE/Household use Power Supply
B=P/N: (料号) WR9QG2667CCPNKITR6B
C=Model (型号) GTM46402-4015
D=Input (输入)100-240V~, 50-60 Hz, 1.0A
E=Output (输出)15.0 V ⎓ 2.66 A, 40.00W

PROPRIETARY INFORMATION
PROPRIETARY OF GLOBTEK, INC. ANY REPRODUCTION, DISCLOSURE OR USE OF THIS DRAWING, IN WHOLE OR IN PART, IS HEREBY PROHIBITED EXCEPT AS SPECIFIED IN WRITING BY GLOBTEK, INC. © GlobTek, Inc. 2023 - 2024
guest / 05/29/2024 2:04:09 PM GMT CLONED FROM WR9QG2667CCPN(R6B)

AGENCY ONLINE DOCUMENTS	http://www.globtek.info/certs/GTM46402/
CE EC-Declaration for Medical	https://cs.globtek.info/ec_declaration_product?id=01t3a000005gvkP&m=1
CE EC-Declaration for Industrial/Commercial/ITE	https://cs.globtek.info/ec_declaration_product?id=01t3a000005gvkP&i=2
CE EC-Declaration for Household	https://cs.globtek.info/ec_declaration_product?id=01t3a000005gvkP&h=2
UKCA-Declaration for Medical	https://cs.globtek.info/ukca_declaration_product?id=01t3a000005gvkP&m=1
UKCA-Declaration for Industrial/Commercial/ITE	https://cs.globtek.info/ukca_declaration_product?id=01t3a000005gvkP&i=2
UKCA-Declaration for Household	https://cs.globtek.info/ukca_declaration_product?id=01t3a000005gvkP&h=2
Morocco SDoC Declaration	https://cs.globtek.info/Morocco_SDoC_Declaration?id=a0Oa000000FivPcEAJ
RoHS/RoHS3 Declaration	https://www.globtek.com/pdf/rohs_cert/01t3a000005gvkPAAQ
REACH Declaration	https://www.globtek.com/pdf/iso_certificates/REACH.pdf
Conflict Minerals Declaration	https://www.globtek.com/pdf/conflict-minerals.pdf
Prop 65 Statement	https://www.globtek.com/prop-65-statement.pdf

IPXY rating is based on 3rd party testing and customers should check suitability and test system level IPXY rating before ordering.

Regulatory Certifications/Label Markings

Below follows a link to the latest regulatory certifications and marks for this specific product. National standards as well as certification schemes are constantly changing and so is the set of certification marks and symbols applicable to this product. Various standards, marks and symbols, and certificates are subject to change at any time without notice.

Additional standards or unique country certifications are available upon request. Please contact Globtek to request a quotation.

LATEST PRODUCT/MODEL CERTIFICATIONS:	https://www.globtek.com/ds/7eYqR4AQ3TR/szgLDkGpMuJ.html
AGENCY ONLINE DOCUMENTS	http://www.globtek.info/certs/GTM46402/



(F1) Floating output, Class II / double insulated

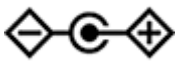

Center Positive (+V), symbol compliant with IEC 60417 symbol no. 5926

PROPRIETARY INFORMATION

PROPRIETARY OF GLOBTEK, INC. ANY REPRODUCTION, DISCLOSURE OR USE OF THIS DRAWING, IN WHOLE OR IN PART, IS HEREBY PROHIBITED EXCEPT AS SPECIFIED IN WRITING BY GLOBTEK, INC. © GlobTek, Inc. 2023 - 2024

guest / 05/29/2024 2:04:09 PM GMT CLONED FROM WR9QG2667CCPN(R6B)

PACKAGING

Packing Spec P/N	Standard WPI & 4 Blades, Individually Box PE 0.05*110*200, User manual
Box Qty	60
Gift Box Size (mm)	100*90*58
Gift Box Color	White
Master Carton Size (mm)	478 x 421 x 200
Master Carton Cubic Volume (m^3)	0.04
Master GW (Kg)	15.2 kg
BLADES INCLUDED	Q-KIT(R): Q-Series Kit (4) Blades: Q-NA; Q-UK; Q-SAA; Q-EU
BLADE/CORD INSTALLED	:
USER MANUAL*	809-PSUQKITUSERMANUAL on A4 paper
USER MANUAL WEB LINK	https://www.globtek.com/pdf/809-PSUQKITUSERMANUAL.jpg

* This specification sheet is considered the user manual for all applications. It is expected that the buyer of this product will use it to formulate their own user manual for their end product and a user manual specifically for the power adapter is not usually required. If a user manual is not specifically listed above then none will be provided with this unit.

Power Supply & Blade(s) packaged together; see above "Blades Included" for actual blades included in the gift box.

If specific packaging is required, this section must specify all requirements and note “no exceptions”. If this section does not specify packaging, it is subject to change without notice at GlobTek’s discretion

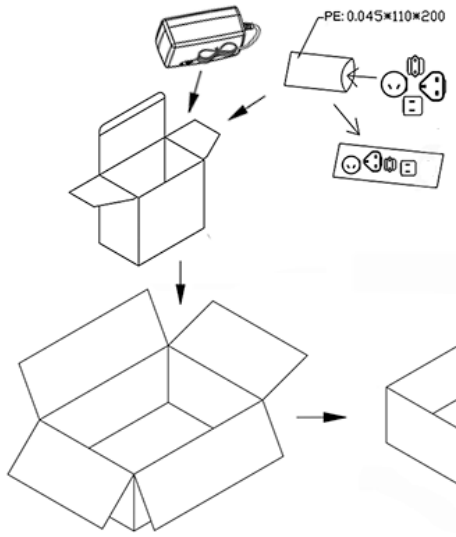

PROPRIETARY INFORMATION

PROPRIETARY OF GLOBTEK, INC. ANY REPRODUCTION, DISCLOSURE OR USE OF THIS DRAWING, IN WHOLE OR IN PART, IS HEREBY PROHIBITED EXCEPT AS SPECIFIED IN WRITING BY GLOBTEK, INC. © GlobTek, Inc. 2023 - 2024

guest / 05/29/2024 2:04:09 PM GMT CLONED FROM WR9QG2667CCPN(R6B)

INSTRUCTIONS TO THE OEM SYSTEMS ENGINEER

It is the responsibility of the OEM systems engineer to provide the end system user instructions and warnings for the use of this product in the end system.

If an input cord is required for this product, AC Mains voltage should be provided to the power supply by a power supply cord approved to the national standards of the country in which it will be used.

This product is not designed to be repaired. No serviceable parts inside. A blown internal fuse is an indication of catastrophic failure of circuit component(s). If a Failure Analysis is required for a failed power supply/battery charger, please return the damaged unit to GlobTek for an accurate determination of the root cause of the failure.

EMC Compliance of the complete OEM product, including the GlobTek power supply/battery charger needs to be verified by the OEM systems engineer.

PROPRIETARY INFORMATION

PROPRIETARY OF GLOBTEK, INC. ANY REPRODUCTION, DISCLOSURE OR USE OF THIS DRAWING, IN WHOLE OR IN PART, IS HEREBY PROHIBITED EXCEPT AS SPECIFIED IN WRITING BY GLOBTEK, INC. © GlobTek, Inc. 2023 - 2024

guest / 05/29/2024 2:04:09 PM GMT CLONED FROM WR9QG2667CCPN(R6B)

INSTRUCTION SHEET

Q Blades Instruction Sheet (not required to be packaged with product)

Insertion Instructions: http://www.globtek.com/pdf/Instructions-Interchangeable-Blades.pdf

This manual is Provided to customer within the product specification - it is the responsibility of the OEM/customer to provide the end system user instructions + warnings for the use of this product in the end system. By accepting this specification the customer/OEM Agrees to these terms.

USER MANUAL FOR Q-BLADE SERIES SWITCHING POWER SUPPLIES

Manual del Usuario. Fuentes de Alimentación Series Q-Blade

WARNING! RISK OF FIRE! SHOCK HAZARD!: To prevent electric shock, do not remove the cover. No user-serviceable parts inside. This unit contains hazardous voltages and should only be opened by a trained and qualified technician. Do not use if bent, cracked, modifed or compromised. To avoid the possibility of electric shock, disconnect electric power to the product before connecting or disconnecting.

Advertencia! Riesgo de Fuego! Peligro de Choque eléctrico! No contiene dentro componentes servibles para el usuario. Desconecte el cable de alimentación antes de quitar la cubierta.

INDOOR USE ONLY!

Únicamente para uso en el interior.

POWER SUPPLY BLADE/CORD: AC Mains voltage should be provided to the power supply by a power supply cords approved to the national standards in which it will be used. Please use the below table as a guideline for Suitable Power cords.

CABLE DE ALIMENTACIÓN: El voltaje de la CA debe proporcionarse a la fuente de alimentación mediante los cables de alimentación aprobados conforme a las normas nacionales según las cuales será utilizada. Utilice por favor la tabla mencionada aquí abajo como guía para los cables eléctricos adecuados.

PROPRIETARY INFORMATION

PROPRIETARY OF GLOBTEK, INC. ANY REPRODUCTION, DISCLOSURE OR USE OF THIS DRAWING, IN WHOLE OR IN PART, IS HEREBY PROHIBITED EXCEPT AS SPECIFIED IN WRITING BY GLOBTEK, INC. © GlobTek, Inc. 2023 - 2024

guest / 05/29/2024 2:04:09 PM GMT CLONED FROM WR9QG2667CCPN(R6B)

1. Class II model NEMA 1-15P AC power plug with 2 prongs, Q-NA(R)
2. Australian AS 3112 configuration: SAA 2 pins Class II, Q-SAA(R)
3. UK BS 1363 configuration: UK 2 pins Class II, Q-UK(R)
4. European CEE 7/16 configuration: Europlug 2 PINS, Class II, Q-EU(R)
5. Korean KS C8305 configuration: Q-KR(R)
6. Argentina IRAM 2073 configuration: 2 pins, Class II Q-AR(R)
7. China GR 2099 configuration: 2 pins, Class II Q-CN(R)
8. India configuration: 2 pins, Class II, Q-IN(R)
9. IEC320/C18 Inlet

FUSING: Internal fuse for Line is provided in the power supply. A blown internal fuse is an indication of catastrophic failure of circuit component(s). Repair must be performed by GlobTek, Inc. authorized personnel. Fuses must be replaced with same type and ratings per GlobTek internal documentation.

PROPRIETARY INFORMATION

PROPRIETARY OF GLOBTEK, INC. ANY REPRODUCTION, DISCLOSURE OR USE OF THIS DRAWING, IN WHOLE OR IN PART, IS HEREBY PROHIBITED EXCEPT AS SPECIFIED IN WRITING BY GLOBTEK, INC. © GlobTek, Inc. 2023 - 2024

guest / 05/29/2024 2:04:09 PM GMT CLONED FROM WR9QG2667CCPN(R6B)

FUSIBLES: La fuente de alimentación provee un fusible interno para la línea. Un fusible interno quemado es un indicador de una falla catastrófica de los componentes del circuito. La reparación debe ser hecha por personal autorizado de GlobTek, Inc. Los fusibles se deben reemplazar por los mismos tipos y rangos que la documentación interna de GlobTek mencione.

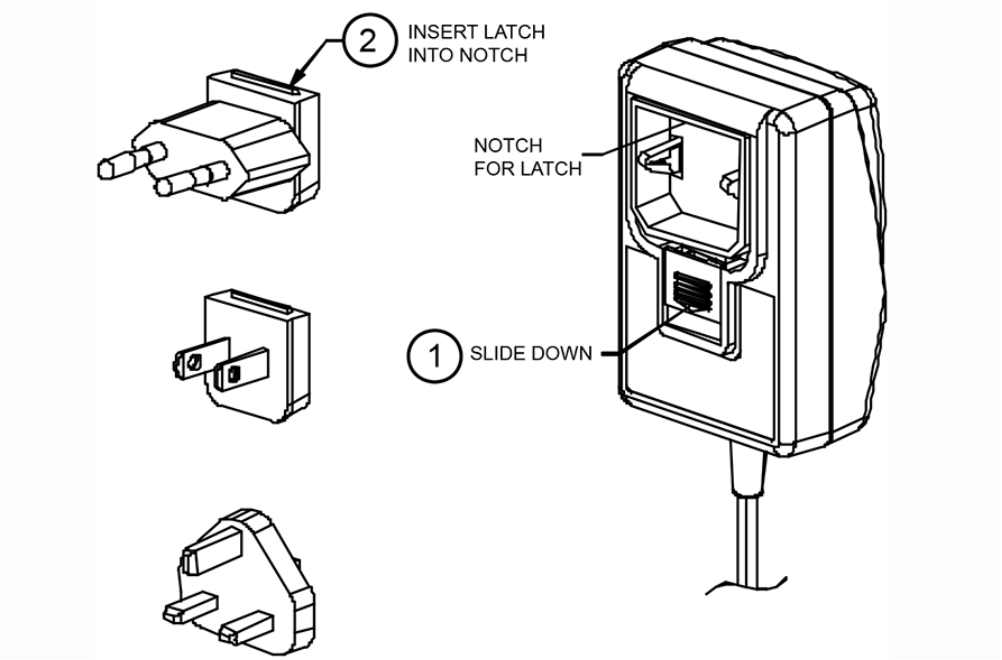

This symbol on an instrument indicates that the user should refer to the operating instructions located in the manual.

Please note:

The blades shown above are for representation of the installation process and do not indicate which AC blades are included with this power supply. Please reference the specifications “Power Supply Information” (page 2) and “Input Configuration (page 6) for information regarding the actual blade included with this power supply, if any.

PROPRIETARY INFORMATION

PROPRIETARY OF GLOBTEK, INC. ANY REPRODUCTION, DISCLOSURE OR USE OF THIS DRAWING, IN WHOLE OR IN PART, IS HEREBY PROHIBITED EXCEPT AS SPECIFIED IN WRITING BY GLOBTEK, INC. © GlobTek, Inc. 2023 - 2024

guest / 05/29/2024 2:04:09 PM GMT CLONED FROM WR9QG2667CCPN(R6B)

GlobTek, Inc.
www.globtek.com
186 Veterans Drive,
Northvale, NJ 07647
Tel. (201) 784-1000
Fax (201) 784-0111

Drawing Title: GTM46402-4015, Medical/ICT/ITE/Household use Power Supply, Efficiency Level: USA DOE Level VI / Eco-design Directive 2009/125/EC, (EU) 2019/1782, Case Color/Style: GlobTek Black, Wall Plug-in, Regulated Switchmode AC-DC Power Supply AC Adaptor, Input Rating: 100-240V~, 50-60 Hz, Interchangeable Blades, https://www.globtek.com/interchangeable-blades.php, Output Rating: 40.00W, 15.0V@2.66A, Pin Out: Center Positive (+V), symbol compliant with IEC 60417 symbol no. 5926, Output Configuration: 1200 mm, 16/2 Cond, UL 2468, Female Barrel 5.5*2.1*12mm with internal Spring Clip and Locking Notch or Equal, Ferrite: None, GlobTek Black, GT Cord # C70293, Blades/Input Cord: Q-Series Kit (4) Blades: Q-NA; Q-UK; Q-SAA; Q-EU, Approvals:	
Model No. GTM46402-4015	
Part No./Ordering No. WR9QG2667CCPNKITR6B	Rev A

PROPRIETARY INFORMATION
PROPRIETARY OF GLOBTEK, INC. ANY REPRODUCTION, DISCLOSURE OR USE OF THIS DRAWING, IN WHOLE OR IN PART, IS HEREBY PROHIBITED EXCEPT AS SPECIFIED IN WRITING BY GLOBTEK, INC. © GlobTek, Inc. 2023 - 2024
guest / 05/29/2024 2:04:09 PM GMT CLONED FROM WR9QG2667CCPN(R6B)