# Flat suction cup (round)

SUF 80 HT1-60 G1/4-IG

Part no..:10.01.01.14084

https://www.schmalz.com/10.01.01.14084

Home > Vacuum Technology for Automation > Vacuum Components > Vacuum Suction Cups > Flat Suction Cups (Round) > Flat Suction Cups SUF > SUF 80 HT1-60 G1/4-IG

## Flat suction cup (round) for process safe handling of smooth or slightly rough surfaces

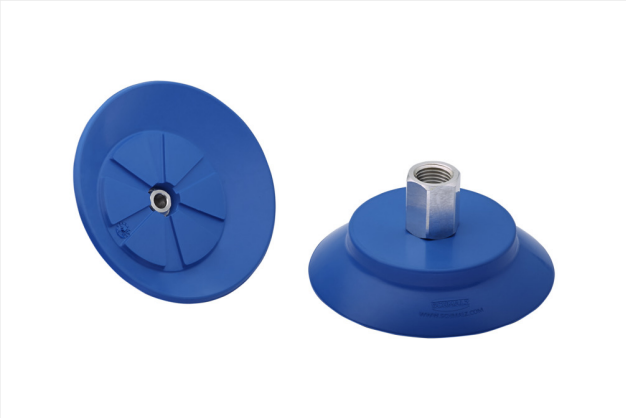

- Size: 80
- Suction cup material: High temperature material HT1
- Material hardness [Shore A]: 60 Shore A
- Vacuum connection: G1/4"-F

## Design Data

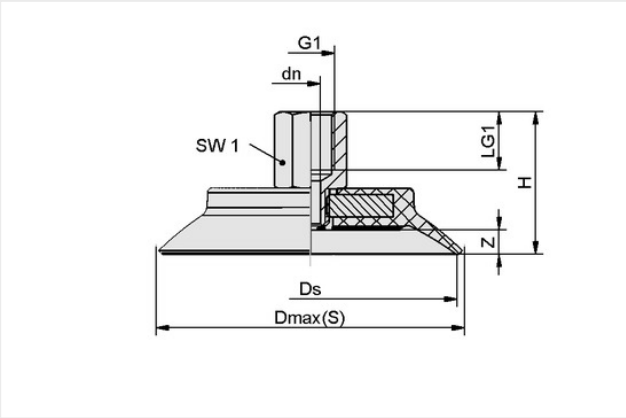


| Attribute | Value |
|---|---|
| Dmax(S) | 87.10 mm |
| Ds | 80 mm |
| dn | 5.10 mm |
| G1 | G1/4"-F |
| H | 34.90 mm |
| LG1 | 12 mm |
| SW1 | 17 mm |
| Z (Stroke) | 6.50 mm |

## Technical Data

| Attribute | Value |
|---|---|
| Suction force (-600mbar) | 254 N |
| Pull-off force | 254 N |
| Volume | 25.10 $cm^3$ |
| Curve radius (min) (convex) | 100 mm |
| Hose diameter (rec.) d | 6 mm |
| Size | 80 |
| Suction cup material | High temperature material HT1 |
| Material hardness [Shore A] | 60 Shore A |

Contact Schmalz
Schmalz Inc. | 5850 Oak Forest Drive, Raleigh, NC 27616, United States | +1 (919) 713-0880 |
schmalz.us@schmalz.com

# Flat suction cup (round)

SUF 80 HT1-60 G1/4-IG

Part no..:10.01.01.14084

https://www.schmalz.com/10.01.01.14084

| | |
|---|---|
| Weight | 72.80 g |
| Product family | SUF |
| Number of folds | 0 |

Note: Suction force: The specified suction forces are theoretical values at a vacuum of -0.6 bar and with a dry, smooth and flat workpiece surface - they do not include a safety factor Hose diameter: The recommended hose diameter refers to a hose length of approx. 2 m