# Flat suction cup (round)

SUF 50 NBR-55 G1/8-IG

Part no..:10.01.01.14095

https://www.schmalz.com/10.01.01.14095

Home > Vacuum Technology for Automation > Vacuum Components > Vacuum Suction Cups > Flat Suction Cups (Round) > Flat Suction Cups SUF > SUF 50 NBR-55 G1/8-IG

## Flat suction cup (round) for process safe handling of smooth or slightly rough surfaces



- Size: 50
- Suction cup material: Nitrile rubber NBR
- Material hardness [Shore A]: 55 Shore A
- Vacuum connection: G1/8"-F

## Design Data

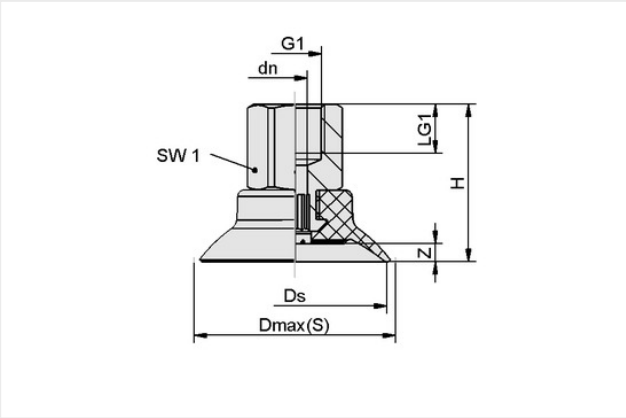


| Attribute | Value |
|---|---|
| Dmax(S) | 54.30 mm |
| Ds | 50 mm |
| dn | 6.10 mm |
| G1 | G1/8"-F |
| H | 31 mm |
| LG1 | 8 mm |
| SW1 | 17 mm |
| Z (Stroke) | 5 mm |

## Technical Data

| Attribute | Value |
|---|---|
| Suction force (-600mbar) | 95 N |
| Pull-off force | 95 N |
| Volume | 7.10 cm³ |
| Curve radius (min) (convex) | 75 mm |
| Hose diameter (rec.) d | 4 mm |
| Size | 50 |
| Suction cup material | Nitrile rubber NBR |
| Material hardness [Shore A] | 55 Shore A |

Contact Schmalz
Schmalz Inc. | 5850 Oak Forest Drive, Raleigh, NC 27616, United States | +1 (919) 713-0880 |
schmalz.us@schmalz.com

# Flat suction cup (round)

SUF 50 NBR-55 G1/8-IG

Part no..:10.01.01.14095

https://www.schmalz.com/10.01.01.14095

| | |
|---|---|
| Weight | 24.90 g |
| Product family | SUF |
| Number of folds | 0 |

Note: Suction force: The specified suction forces are theoretical values at a vacuum of -0.6 bar and with a dry, smooth and flat workpiece surface - they do not include a safety factor Hose diameter: The recommended hose diameter refers to a hose length of approx. 2 m

## Spare parts



**SC 050 G1/8-IG**

Part no..:10.01.06.04308

| |
|---|
| Connection geometry: 050 |
| Vacuum connection: G1/8"-F |
| Fitting length: 14 mm |
| Nominal diameter dn: 6.1 mm |



**SUF 50 NBR-55 SC050**

Part no..:10.01.01.13952

| |
|---|
| Size: 50 |
| Suction cup material: Nitrile rubber NBR |
| Material hardness [Shore A]: 55 Shore A |