Needle gripper

SNG-V 10 1.2 V-7

Part no..:10.01.29.00176

https://www.schmalz.com/10.01.29.00176

Home > Vacuum Technology for Automation > Vacuum Components > Special Grippers > Needle Grippers > Needle Grippers SNG-V > SNG-V 10 1.2 V-7

Needle gripper "SNG-V", particularly robust version



- Number of needles: 10
- Needle diameter: 1.2 mm
- Add. function: Variable stroke
- Needle stroke Z(NA): 7 mm
- Pressure range (operating pressure): 3.0 ... 7.0 bar

Design Data

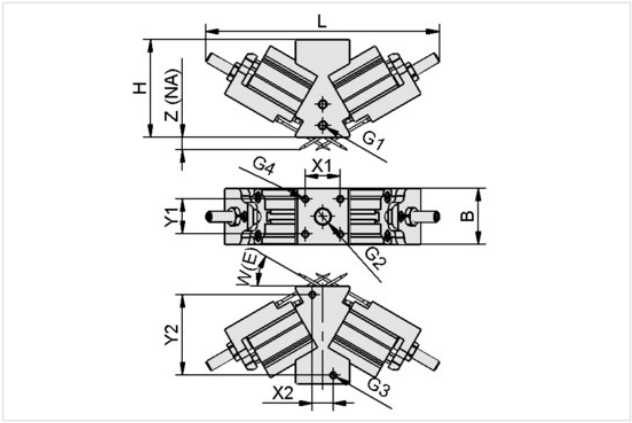

Attribute	Value
B	32 mm
G1	M5-F
G2	G1/8"-F
G3	M4-F
G4	M4-F
H	56 mm
L	149 mm
W(E)	30 °
X1	20 mm
X2	12 mm
Y1	20 mm
Y2	46 mm
Z(NA)	7 mm

Technical Data

Attribute	Value
Number of needles	10
Needle diameter	1.20 mm
Pressure range (operating pressure)	3.0 ... 7.0 bar
Operating temperature	5 ... 60 °C

Needle gripper

SNG-V 10 1.2 V-7

Part no..:10.01.29.00176

https://www.schmalz.com/10.01.29.00176

Weight	265 g
Add. function	Variable stroke
Product family	SNG-V

Accessories



BEF-PL 31x34x11.5 G1/4-IG SNG

Part no..:10.01.29.00093

Construction use: Needle gripper
Length L: 31 mm
Width B: 34 mm
Height H: 11.5 mm
Thread G1: G1/4"-F

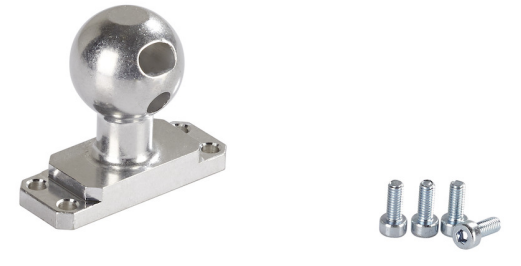

HTS-A3 SGM 30/40 OP

Part no..:10.01.17.00558

Connection 1: Ball head 28.5 mm
Construction use: Magnetic gripper
Size: 30/40

Needle gripper

SNG-V 10 1.2 V-7

Part no..:10.01.29.00176

https://www.schmalz.com/10.01.29.00176



HTS-A2 SGM 30/40 OP

Part no..:10.01.17.00581

Connection 1: Bolt with slot Ø19mm
Construction use: Magnetic gripper
Size: 30/40

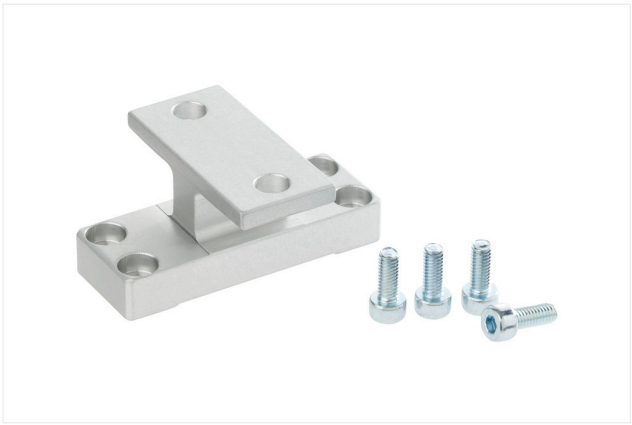

HPS-SGM 2M6 30/40 OP

Part no..:10.01.17.00655

Construction use: Magnetic gripper
Connection 1: 2x screws M6
Size: 30/40
Shape: One-piece



STV-GE M5-AG 6

Part no..:10.08.02.00201

Thread G1: M5-M
Hose diameter: 6 mm
Material: Brass
Operating temperature: -20 ... 80 °C
External diameter D: 9.9 mm
Length L: 18.8 mm

Needle gripper

SNG-V 10 1.2 V-7

Part no..:10.01.29.00176

https://www.schmalz.com/10.01.29.00176



STV-W M5-AG 6

Part no..:10.08.02.00296

Pressure range (operating pressure): bar
Length L: 20.8 mm
Height H: 13 mm
Thread G1: M5-M

VSL 6-4 PU MI-TR

Part no..:10.07.09.00002

External diameter D: 6 mm
Internal diameter d: 4 mm
Length max.: 500 m
Material hose: PU
Bending radius min.: 35 mm
Pressure range (operating pressure): -0.95 ... 10.00 bar
Operating temperature: -20 ... 90 °C

Spare parts

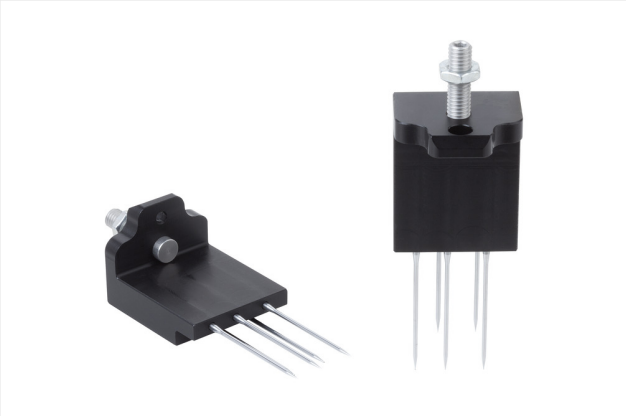

ERS SNG-V 10 1.2

Part no..:10.01.29.00238

Construction use: Needle gripper
Size: V
contains: 2 needle wedges mounted
Number of needles: 10
Needle diameter: 1.2 mm