Flat suction pad (round)

SFF 15 NBR-ESD-55 M5-AG

Part no..:10.01.01.14536

https://www.schmalz.com/10.01.01.14536

Home > Vacuum Technology for Automation > Vacuum Components > Vacuum Suction Cups > Suction Cups for Plastic Films and Paper > Suction Cups SFF / SFB1 > SFF 15 NBR-ESD-55 M5-AG

Flat suction cup (round) for dynamic handling of thin and flexible workpieces



- Size: 15
- Suction cup material: Nitrile rubber NBR-ESD
- Material hardness [Shore A]: 55 Shore A
- Number of folds: 0

Design Data

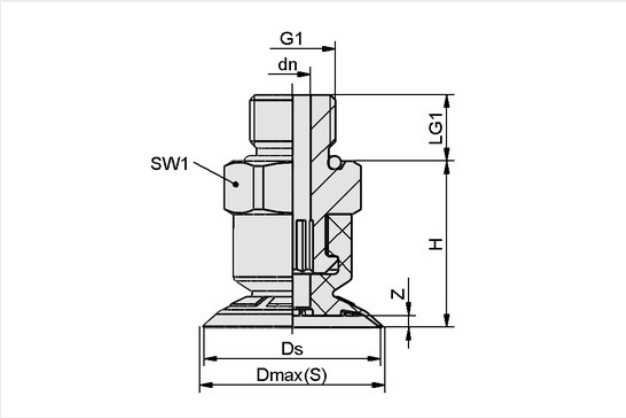

Attribute	Value
G1	M5-M
Dmax(S)	16 mm
Ds	15 mm
dn	1.80 mm
LG1	4.70 mm
H	17.50 mm
SW1	10 mm
Z (Stroke)	1 mm

Technical Data

Attribute	Value
Size	15
Suction cup material	Nitrile rubber NBR-ESD
Suction force (-600mbar)	6.60 N
Product family	SFF
Volume	0.60 cm^3
Number of folds	0
Material hardness [Shore A]	55 Shore A

Contact Schmalz
Schmalz Inc. | 5850 Oak Forest Drive, Raleigh, NC 27616, United States | +1 (919) 713-0880 |
schmalz.us@schmalz.com

Flat suction pad (round)

SFF 15 NBR-ESD-55 M5-AG

Part no..:10.01.01.14536

https://www.schmalz.com/10.01.01.14536

Spare parts



SFF 15 NBR-ESD-55 SC040

Part no..:10.01.01.14329

Size: 15
Suction cup material: Nitrile rubber NBR-ESD
Material hardness [Shore A]: 55 Shore A
Number of folds: 0



SC 040 M5-AG

Part no..:10.01.06.04346

Connection geometry: 040
Vacuum connection: M5-M
Fitting length: 5 mm
Nominal diameter dn: 1.8 mm

Contact Schmalz

Schmalz Inc. | 5850 Oak Forest Drive, Raleigh, NC 27616, United States | +1 (919) 713-0880 |
schmalz.us@schmalz.com