Flat suction pad (round)

SFF 15 NBR-ESD-55 G1/8-IG

Part no..:10.01.01.14538

https://www.schmalz.com/10.01.01.14538

Home > Vacuum Technology for Automation > Vacuum Components > Vacuum Suction Cups > Suction Cups for Plastic Films and Paper > Suction Cups SFF / SFB1 > SFF 15 NBR-ESD-55 G1/8-IG

Flat suction cup (round) for dynamic handling of thin and flexible workpieces



- Size: 15
- Suction cup material: Nitrile rubber NBR-ESD
- Material hardness [Shore A]: 55 Shore A
- Number of folds: 0

Design Data

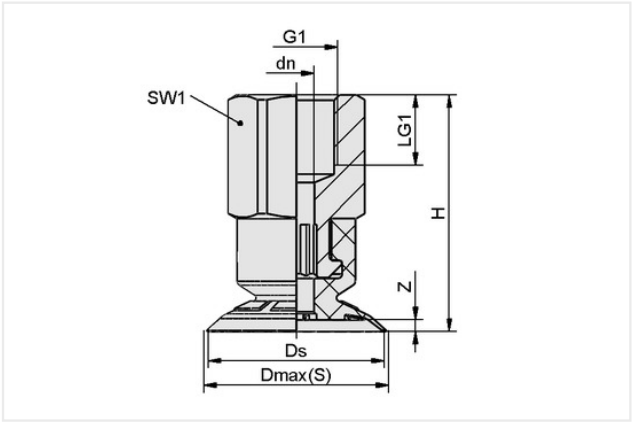

Attribute	Value
G1	G1/8"-F
Dmax(S)	16 mm
Ds	15 mm
dn	4 mm
LG1	8 mm
H	26.50 mm
SW1	14 mm
Z (Stroke)	1 mm

Technical Data

Attribute	Value
Size	15
Suction cup material	Nitrile rubber NBR-ESD
Suction force (-600mbar)	6.60 N
Product family	SFF
Volume	0.60 cm^3
Number of folds	0
Material hardness [Shore A]	55 Shore A

Contact Schmalz
Schmalz Inc. | 5850 Oak Forest Drive, Raleigh, NC 27616, United States | +1 (919) 713-0880 |
schmalz.us@schmalz.com

Flat suction pad (round)

SFF 15 NBR-ESD-55 G1/8-IG

Part no..:10.01.01.14538

https://www.schmalz.com/10.01.01.14538

Spare parts



SFF 15 NBR-ESD-55 SC040

Part no..:10.01.01.14329

Size: 15
Suction cup material: Nitrile rubber NBR-ESD
Material hardness [Shore A]: 55 Shore A
Number of folds: 0



SC 040 G1/8-IG

Part no..:10.01.06.02482

Connection geometry: 040
Connection: G1/8"-F
Length L1: 20.7 mm
Fitting length: 14 mm
Nominal diameter dn: 4.1 mm